CONSTRUCTION DOCUMENTS FOR:

CRAVEN COMMUNITY COLLEGE
CORPORATE TRAINING CENTER

NEW BERN, NC

SCO ID #23-26923-01A

JKF PROJECT NO. 2023-09

SEPTEMBER 1, 2024

TITLE SHEET
BC1.0 BUILDING CODE ANALYSIS, LEGENDS, SYMBOLS & ABBREVIATIONS
BC1.1 LIFE SAFETY PLAN

CIVIL
C0.0 COVER SHEET
SURVEY BY RIVERS & ASSOCIATES, INC.
C0.1 EXISTING CONDITIONS & DEMOLITION PLAN
C1.1 SITE PLAN
C2.1 GRADING, DRAINAGE & UTILITY PLAN
C3.1 STORMWATER CONTROL PLAN
C3.2 STORMWATER CONTROL NOTES
C4.1 SEDIMENTATION & EROSION CONTROL PLAN - STAGE 1
C4.2 SEDIMENTATION & EROSION CONTROL PLAN - STAGE 2
C5.1 SEDIMENTATION & EROSION CONTROL DETAILS
C5.2 SEDIMENTATION & EROSION CONTROL DETAILS
C6.1 NPDES DETAILS & NOTES
C7.1 SITE DETAILS
C8.1 WATER DETAILS
C9.1 SEWER DETAILS
C10.1 GRADING & DRAINAGE DETAILS
L1.1 WETLAND PLANTING PLAN

ARCHITECTURAL
ASP0.0 EXISTING OVERALL CAMPUS PLAN
ASP0.1 SITE DEMOLITION PLAN
ASP1.0 OVERALL CAMPUS PLAN
ASP1.1 ENLARGED SITE PLAN
A1.1 FLOOR PLAN
A1.2 ROOF PLAN
A2.1 EXTERIOR ELEVATIONS
A2.2 BUILDING SECTIONS
A3.1 WALL SECTIONS
A3.2 WALL SECTIONS
A3.3 WALL SECTIONS
A3.4 WALL SECTIONS
A4.1 ENLARGED PLANS, INTERIOR ELEVATIONS
A4.2 ENLARGED PLANS, INTERIOR ELEVATIONS
A5.1 REFLECTED CEILING PLAN
A6.1 EXTERIOR DETAILS
A6.2 EXTERIOR DETAILS
A6.3 EXTERIOR DETAILS
A7.1 PARTITION TYPES
A7.2 DETAILS
A8.1 DOOR SCHEDULE AND DETAILS
A8.2 WINDOW SCHEDULE AND DETAILS
A9.1 ROOM FINISH PLAN

STRUCTURAL
S0.1 GENERAL NOTES
S0.2 GENERAL NOTES
S1.1 FOUNDATION PLAN
S1.2 ROOF FRAMING PLAN
S2.1 CANOPY FRAMING ELEVATIONS
S3.1 SECTIONS
S3.2 SECTIONS
S3.3 SECTIONS
S3.4 SECTIONS
S3.5 SECTIONS
S4.1 ENLARGED FRONT CANOPY ROOF FRAMING PLAN
S5.1 TYPICAL DETAILS
S5.2 TYPICAL DETAILS
S5.3 TYPICAL DETAILS
S5.4 TYPICAL DETAILS

FIRE PROTECTION
FP0.0 FIRE PROTECTION LEGENDS AND GENERAL NOTES
FP1.1 FIRE PROTECTION PLAN
FP2.1 FIRE PROTECTION SECTIONS
FP5.1 FIRE PROTECTION SITE PLAN

PLUMBING
P0.0 PLUMBING LEGENDS, NOTES AND FIXTURE LOAD
P1.1 PLUMBING OVERALL PLAN - WATER
P2.1 PLUMBING ENLARGED PLAN - WATER
P3.1 PLUMBING ENLARGED PLAN - WASTE
P4.1 PLUMBING WASTE RISERS
P5.1 PLUMBING DETAILS
P6.1 PLUMBING FIXTURE SCHEDULE

MECHANICAL
M0.0 MECHANICAL NOTES, LEGEND AND DETAILS
M1.1 MECHANICAL PLAN
M2.1 MECHANICAL PIPING PLAN
M3.1 MECHANICAL SCHEDULES
M4.1 MECHANICAL DETAILS
M5.1 VRF SCHEMATIC

ELECTRICAL
E0.0 LEGEND NOTES
E1.1 POWER PLAN
E2.1 LIGHTING PLAN
E3.1 MECHANICAL AND PLUMBING POWER PLAN
E4.1 POWER RISER DIAGRAM PANEL SCHEDULES
E5.1 LIGHTING CONTROL DIAGRAM COMMUNICATION RISER SECURITY RISER AND DETAILS
E5.2 SECURED DOOR DETAILS
E5.3 DETAILS
E6.1 FIXTURE SCHEDULE
E7.1 EXISTING ELECTRICAL SITE PLAN ELECTRICAL SITE PLAN
FA0.0 FIRE ALARM LEGEND, NOTES AND BDA SYSTEM DIAGRAM
FA1.1 FIRE ALARM PLAN

JKF ARCHITECTURE

JKF ARCHITECTURE, P.C.
625 LYNNDALE CT., SUITE F, GREENVILLE, NC 27858 (252)355-1068

JOHN K. FARKAS REGISTERED ARCHITECT 10/15/2024 5922 GREENVILLE, N

JKF ARCHITECTURE, P.C. REGISTERED ARCHITECTURAL CORPORATION CERT. NO. 51351 NORTH CAROLINA GREENVILLE, NC

RIVERS & ASSOCIATES, INC.
CIVIL ENGINEERS
107 EAST SECOND STREET
GREENVILLE, NC 27858
252-752-4135

NESER & ROOMSBURG, PA
STRUCTURAL ENGINEERS
748 LORD DUNMORE DRIVE, STE. 101
VIRGINIA BEACH, VA 23464
757-474-0612

ATLANTEC ENGINEERS, PA
PLUMBING, MECHANICAL & ELECTRICAL ENGINEERS
3221 BLUE RIDGE ROAD, SUITE 113
RALEIGH, NC 27612
919-571-1111

ROOM FINISH SCHEDULE (SEE FLOOR PLANS)

ROOM NAME
101
A | B | C
- WALL FINISH
- BASE MATERIAL/FINISH
- FLOOR MATERIAL/FINISH

FLOOR MATERIALS/FINISH

CR	CARPET TILE
CT	CERAMIC TILE
EC	EXPOSED CONCRETE, SEALED
LV	LUXURY VINYL TILE

BASE MATERIALS

CT	CERAMIC TILE
R	RUBBER

WALL MATERIALS/FINISH

CT	CERAMIC TILE
P	PAINTED GYPSUM BOARD
WC	WALL COVERING

REFLECTED CEILING PLAN LEGEND

ROOM NAME
101
CLG HGT
- ROOM NO.
- FIN. CLG. HEIGHT AFF.
- CEILING MATERIAL

- LIGHT FIXTURE (SEE ELECTRICAL DRAWINGS FOR SIZE AND TYPE)
- INDIRECT LAY-IN LIGHT FIXTURE (SEE ELECTRICAL DRAWINGS FOR SIZE AND TYPE)
- DIRECT/INDIRECT PENDENT MOUNTED LIGHT FIXTURE (SEE ELECTRICAL DRAWINGS FOR SIZE AND TYPE)
- DOWNLIGHT FIXTURE
- WALL SCONCE OR MOUNTED FIXTURE
- SPECIALTY LIGHT FIXTURE
- SPECIALTY LIGHT FIXTURE
- FAN COIL UNIT
- SUPPLY AIR DIFFUSER
- RETURN AIR DIFFUSER
- EXHAUST AIR GRILLE
- PROJECTOR (BY OWNER)
- ACCESS DOOR
- WIRELESS ACCESS POINT
- EXIT SIGN
  - SIGN FACE
  - DIRECTION ARROW IF NEEDED
- HEAT DETECTOR
- SMOKE DETECTOR
- OCCUPANCY SENSOR
- SPRINKLER HEAD CEILING
- FIRE ALARM HORN STROBE
- FIRE ALARM STROBE
- CAMERA (BY OWNER, WIRE BY GC)
- EMERGENCY NOTIFICATION SYSTEM (BY OWNER, WIRE BY GC)
- X'-X" / XXX — DATUM ABOVE FIN. FLOOR CEILING MATERIAL (SEE LEGEND)

CEILING MATERIALS LEGEND

APC	ACOUSTICAL PANEL CEILING (IF FOLLOWED BY A NUMERAL DENOTES SPECIAL TYPE AS SPECIFIED)
PGB	PAINTED GYPSUM BOARD
EXP	EXPOSED STRUCTURE & DECK PAINTED

GENERAL PROJECT LEGEND

- A1 / A3J — REFERENCE NO. / DRAWING NO.
- DENOTES CHANGE IN FINISHED FLOOR MATERIAL
- A1 / A4 A4J A2 / A3 — ELEVATION REFERENCE
- 100 — DOOR NO. / DOOR ASSEMBLY DESIGNATION / HARDWARE SET NO. / DOOR GROUP NO.
- 4X — PARTITION TYPE (SEE DRAWING A7.1) / DOT DENOTES SIDE W/SPECIAL FINISH
- A / 1 — GENERAL NOTE REFERENCE NUMBERS DESIGNATE DEMOLITION, LETTERS DESIGNATE CONSTRUCTION.
- NEW CONSTRUCTION

ARCHITECTURAL ABBREVIATIONS

APC	ACOUSTICAL PANEL CEILING
ADJ	ADJACENT
AFF	ABOVE FINISHED FLOOR
AL	ALUMINUM
ALT	ALTERNATE
AN	ANODIZED
ATTN	ATTENUATION
BD	BOARD
BIT	BITUMINOUS
BLKG	BLOCKING
BLKT	BLANKET
BM	BEAM
BOP	BOTTOM OF PLATE
BOS	BOTTOM OF STEEL
BRG	BEARING
CAB	CABINET
CAP	CAPACITY
CB	CATCH BASIN
C	CENTERLINE
CJ	CONTROL JOINT
CLG HT	CEILING HEIGHT
CLR	CLEAR
CLG	CEILING
CMU	CONCRETE MASONRY UNIT
COL	COLUMN
CONC	CONCRETE
CONSTR	CONSTRUCTION
CONT	CONTINUOUS
CONTR	CONTRACTOR
CT	CERAMIC TILE
DWG	DRAWING
EA	EACH
EC	ELECTRICAL CONTRACTOR
EF	EXHAUST FAN
ELEC	ELECTRICAL
ENCL	ENCLOSURE
EOS	EDGE OF SLAB
EWC	ELECTRIC WATER COOLER
EXIST	EXISTING
EXPD	EXPOSED
EXP JT	EXPANSION JOINT
EXT	EXTERIOR
FDN	FOUNDATION
FE	FIRE EXTINGUISHER
FFE	FINISHED FLOOR ELEVATION
FL	FLOOR
FRP	FIBERGLASS REINFORCED POLYESTER
FT	FIRE RETARDANT TREATED
FTG	FOOTING
FUR	FURRING
GA	GAUGE
GAL	GALLON
GALV	GALVANIZED
GB	GRAB BAR
GC	GENERAL CONTRACTOR
GL	GLASS
GN	GENERAL NOTE
GYP BD	GYPSUM BOARD
HDW	HARDWARE
HM	HOLLOW METAL
HT	HEIGHT
HVAC	HEATING, VENTILATION, AIR CONDITIONING
INT	INTERIOR
INSUL	INSULATION
INV	INVERT
JT	JOINT
LAV	LAVATORY
MANUF	MANUFACTURER
MC	MECHANICAL CONTRACTOR
MH	MANHOLE
MECH	MECHANICAL
MIN	MINIMUM
MO	MASONRY OPENING
MTD	MOUNTED
MTL	METAL
NTS	NOT TO SCALE
NIC	NOT IN CONTRACT
O/C	ON CENTER
OH	OVERHANG
OHD	OVERHEAD
OPNG	OPENING
PART	PARTITION
PC	PLUMBING CONTRACTOR
PGB	PAINTED GYPSUM BOARD
PGBR	PAINTED GYPSUM BOARD WITH REVEAL
PL	PLATE
P	PAINTED
REF	REFRIGERATOR
REINF	REINFORCE / REINFORCING
REQD	REQUIRED
RM	ROOM
RO	ROUGH OPENING
RSW	RAIL & STILE WOOD
SCHED	SCHEDULE
SF	SQUARE FEET
SIM	SIMILAR
SPECS	SPECIFICATIONS
SS	STAINLESS STEEL
STD	STANDARD
STL	STEEL
STRUCT	STRUCTURE / STRUCTURAL
SUSP	SUSPENDED
TC	TOP CURB
TF	TRANSPARENT FINISH
TG	TOP GRATE
TEMP	TEMPERED
THK	THICK
TJ	TOP OF JOIST
TOM	TOP OF MASONRY
TOP	TOP OF PLATE
TOS	TOP OF SLAB
TOW	TOP OF WALL
TYP	TYPICAL
T/S	TOP OF STEEL
TS	TUBE STEEL
UNO	UNLESS OTHERWISE NOTED
VAR	VARIES
VERT	VERTICAL
VIF	VERIFY IN FIELD
WD	WOOD
WDW	WINDOW
WSC	WOOD SOLID CORE
WWF	WELDED WIRE FABRIC
W/	WITH

2018 APPENDIX B
BUILDING CODE SUMMARY FOR ALL COMMERCIAL PROJECTS
(EXCEPT 1 AND 2-FAMILY DWELLINGS AND TOWNHOUSES)
(Reproduce the following data on the building plans sheet 1 or 2)

Name of Project: CORPORATE TRAINING CENTER
Address: CRAVEN CC, 800 COLLEGE CT., NEW BERN, N.C. Zip Code 28562
Owner/Authorized Agent: CCC Phone # (252) 638 - 7260 E-Mail mellvillej@cravencc.edu
Owned By: County
Code Enforcement Jurisdiction: City, New Bern

CONTACT: John K. Farkas, AIA

DESIGNER	FIRM	NAME	LICENSE #	TELEPHONE #	E-MAIL
Architectural	JKF Architecture	John K. Farkas, AIA	NC 5922	(252)355-1068	jkf@jkf-arch.com
Civil	Rivers & Associates, Inc	Brian P. Ruff, P.E.	NC 22508	(252)752-4135	pruff@riversand associates.com
Electrical	Atlantec Engineers	Sujin Pramojaney, P.E.	NC 027479	(919)571-1111	Sujin@atlantecengineers.com
Fire Alarm	Atlantec Engineers	Sujin Pramojaney, P.E.	NC 027479	(919)571-1111	Sujin@atlantecengineers.com
Plumbing	Atlantec Engineers	James B. DelPapa, Jr. P.E.	NC 22035	(919)571-1111	jim@atlantecengineers.com
Mechanical	Atlantec Engineers	Patrick McCabe, P.E.	NC 051195	(919)571-1111	patrick@atlantecengineers.com
Sprinkler-Standpipe	Atlantec Engineers	Bradley W. Felts, P.E.	NC 25036	(919)571-1111	brad@atlantecengineers.com
Structural	Neser & Roomsburg PA	Kevin Roomsburg, P.E.	NC 022830	(757)474-0612	kmr@nrwengineering.com

2018 NC BUILDING CODE: New Building

RISK CATEGORY (Table 1604.5): **Current:** N/A **Proposed:** III

BASIC BUILDING DATA
Construction Type: II-B
Sprinklers: Yes NFPA 13
Standpipes: No
Primary Fire District: No **Flood Hazard Area:** No
Special Inspections Required: Yes (Contact the local inspection jurisdiction for additional procedures and requirements.)

Gross Building Area Table

FLOOR	EXISTING (SQ.FT)	NEW (SQ.FT)	SUB-TOTAL
1st Floor	-	12,294	12,294
TOTAL	-	12,294	12,294

ALLOWABLE AREA

Primary Occupancy Classification(s): Assembly - A-3
Accessory Occupancy Classification(s): N/A
Incidental Uses (Table 509): N/A
Special Uses (Chapter 4 – List Code Sections): N/A
Special Provisions: (Chapter 5 – List Code Sections): N/A
Mixed Occupancy: No

STORY NO.	DESCRIPTION AND USE	(A) BLDG AREA PER STORY (ACTUAL)	(B) TABLE 506.2* AREA	(C) AREA FOR FRONTAGE INCREASE[1,2]	(D) ALLOWABLE AREA PER STORY OR UNLIMITED[2,3]
1st Fl.	Corp. Training Ctr.	12,000	38,000	N/A	38,000

ALLOWABLE HEIGHT

	ALLOWABLE	SHOWN ON PLANS	CODE REFERENCE
Building Height in Feet (Table 504.3)	75'	30'	
Building Height in Stories (Table 504.4)	3	1	

[1] Provide code reference if the "Shown on Plans" quantity is not based on Table 504.3 or 504.4.

FIRE PROTECTION REQUIREMENTS

BUILDING ELEMENT	FIRE SEPARATION DISTANCE (FEET)	RATING REQ'D	RATING PROVIDED (W/ ____ REDUCTION)	DETAIL # AND SHEET #	DESIGN # FOR RATED ASSEMBLY	SHEET # FOR RATED PENETRATION	SHEET # FOR RATED JOINTS
Structural Frame, including columns, girders, trusses	>30'						
Bearing Walls	N/A						
Exterior							
North							
East							
West							
South							
Interior							
Nonbearing Walls and Partitions							
Exterior walls							
North	>30'	0	0				
East	40'	0	0				
West	24'	0	0				
South	>30'	0	0				
Interior walls and partitions							
Floor Construction Including supporting beams and joists		0	0				
Floor Ceiling Assembly		0	0				
Columns Supporting Floors		0	0				
Roof Construction, including supporting beams and joists		0	0				
Roof Ceiling Assembly		0	0				
Columns Supporting Roof		0	0				
Shaft Enclosures - Exit		N/A	N/A				
Shaft Enclosures - Other		N/A	N/A				
Corridor Separation		0	0				
Occupancy/Fire Barrier Separation		0	0				
Party/Fire Wall Separation		0	0				
Smoke Barrier Separation		0	0				
Smoke Partition		0	0				
Tenant/Dwelling Unit/ Sleeping Unit Separation		N/A	N/A				
Incidental Use Separation		0	0				

* Indicate section number permitting reduction

PERCENTAGE OF WALL OPENING CALCULATIONS

FIRE SEPARATION DISTANCE (FEET) FROM PROPERTY LINES		DEGREE OF OPENING PROTECTION (TABLE 705.8)	ALLOWABLE AREA (%)	ACTUAL SHOWN ON PLANS (%)
N	>30'	(UP,S)	NO LIMIT	39%
E	40'	(UP,S)	NO LIMIT	18%
W	24'	(UP,S)	NO LIMIT	12%
S	>30'	(UP,S)	NO LIMIT	33%

LIFE SAFETY SYSTEM REQUIREMENTS

Emergency Lighting: Yes
Exit Signs: Yes
Fire Alarm: Yes
Smoke Detection Systems: Yes
Carbon Monoxide Detection: No

LIFE SAFETY PLAN REQUIREMENTS

Life Safety Plan Sheet #: BC1.1

- ☐ Fire and/or smoke rated wall locations (Chapter 7)
- ☐ Assumed and real property line locations (if not on the site plan)
- ☐ Exterior wall opening area with respect to distance to assumed property lines (705.8)
- ☒ Occupancy Use for each area as it relates to occupant load calculation (Table 1004.1.2)
- ☒ Occupant loads for each area
- ☐ Exit access travel distances (1017)
- ☐ Common path of travel distances (Tables 1006.2.1 & 1006.3.2(1))
- ☐ Dead end lengths (1020.4)
- ☒ Clear exit widths for each exit door
- ☒ Maximum calculated occupant load capacity each exit door can accommodate based on egress width (1005.3)
- ☒ Actual occupant load for each exit door
- ☐ A separate schematic plan indicating where fire rated floor/ceiling and/or roof structure is provided for purposes of occupancy separation
- ☒ Location of doors with panic hardware (1010.1.10)
- ☐ Location of doors with delayed egress locks and the amount of delay (1010.1.9.7)
- ☐ Location of doors with electromagnetic egress locks (1010.1.9.9)
- ☐ Location of doors equipped with hold-open devices
- ☐ Location of emergency escape windows (1030)
- ☐ The square footage of each fire area (202)
- ☐ The square footage of each smoke compartment for Occupancy Classification I-2 (407.5)
- ☐ Note any code exceptions or table notes that may have been utilized regarding the items above

ACCESSIBLE PARKING- NO NEW PARKING

PLUMBING FIXTURE REQUIREMENTS (TABLE 2902.1)

USE		WATER CLOSETS			URINALS	LAVATORIES			SHOWERS /TUBS	DRINKING FOUNTAINS	
		MALE	FEMALE	UNISEX		MALE	FEMALE	UNISEX		REGULAR	ACCESSIBLE
SPACE	EXIST'G	-	-	-	-	-	-	-	-	-	-
	NEW	4	7	1	3	5	5	1	0	2	2
	REQ'D	4	7	0	0	3	3	0	0	1	1

SPECIAL APPROVALS

Special approval: (Local Jurisdiction, Department of Insurance, OSC, DPI, DHHS, etc., describe below)

City of New Bern, SCO

ENERGY SUMMARY

ENERGY REQUIREMENTS:
The following data shall be considered minimum and any special attribute required to meet the energy code shall also be provided. Each Designer shall furnish the required portions of the project information for the plan data sheet. If performance method, state the annual energy cost for the standard reference design vs annual energy cost for the proposed design.

Exempt Building: No

Climate Zone: 3A

Method of Compliance: Energy Code - Prescriptive
(If "Other" specify source here)_____

THERMAL ENVELOPE (Prescriptive method only)

Roof/ceiling Assembly No. 2
Description of assembly: STANDING SEAM METAL ROOF + MEMBRANE + R-36 (6") + 1/2" GLASSMAT ON MTL. DECK
U-Value of total assembly: U-0.033
R-Value of insulation: R-30
Skylights in each assembly: N/A

Exterior Wall Assembly No. 1
Description of assembly: 4" FACE BRICK OR CMU + 2" AIR + 2" RIGID (R-10) + 5/8" GLASSMAT + 6" STUD W/(R-19) + 5/8" GYP.BD INTERIOR FINISH
U-Value of total assembly: U-0.034
R-Value of insulation: R-10 + R-19

Exterior Wall Assembly No. 2
Description of assembly: 3 ½" ALUMINUM/COMPOSITE WALL PANEL, 2" RIGID INSULATION (R-7.5) BLDG. PAPER, 5/8" GLASSMAT, (R-19 + R-7.5) PROVIDED, (R-13 + R-7.5 REQUIRED) 6" BLANKET INSULATION, 6" MTL. STUDS, 5/8" GYP. BD., INTERIOR FINISH.
U-Value of total assembly: U= 0.038
R-Value of insulation: R-19 + R-7.5 CI

	EXTERIOR FRP DOOR	ALUMINUM ENTRANCE	CURTAINWALL	WINDOWS
U-Value of assembly	0.125	0.38	0.38	0.38
Solar heat gain coefficient	N/A	0.25	0.25	0.25
Projection factor	N/A	0	0	0
Door R-Value	8.0	3.5	N/A	N/A

Floors slab on grade
Description of assembly: 4" CONCRETE + VAPOR BARRIER + 4" POROUS FILL
U-Value of total assembly: U=0.38
R-Value of insulation: R-7.5 AT PERIMETER
Horizontal/vertical requirement: YES
slab heated: NO

2018 APPENDIX B
BUILDING CODE SUMMARY FOR ALL COMMERCIAL PROJECTS
STRUCTURAL DESIGN
(PROVIDE ON THE STRUCTURAL SHEETS IF APPLICABLE)

DESIGN LOADS:

Importance Factors: Snow (I_S) 1.1
Seismic (I_E) 1.25

Live Loads: Roof 20 psf
Mechanical Room 150 psf
Floor 100 psf

Ground Snow Load: 10 psf

Wind Load: Ultimate Wind Speed 141 mph (ASCE-7)
Exposure Category C

SEISMIC DESIGN CATEGORY: B
Provide the following Seismic Design Parameters:
Risk Category (Table 1604.5) III
Spectral Response Acceleration S_S 12.70 %g S_1 6.30 %g

Site Classification (ASCE 7) D
Data Source: Field Test
Basic structural system Structural Steel Systems Not Specifically Designed For Seismic Resistance
Analysis Procedure: Equivalent Lateral Force
Architectural, Mechanical, Components anchored? Yes

LATERAL DESIGN CONTROL: Wind

SOIL BEARING CAPACITIES:
Field Test (provide copy of test report) 2000 psf
Pile size, type, and capacity N/A

MATERIALS KEYING LEGEND

GENERAL NOTES

KEY PLAN

SCO ID #23-26923-01A

NO	REVISION	DATE

SEAL: JOHN K. FARKAS — REGISTERED ARCHITECT — GREENVILLE, NC — 10/18/2024 — 5922

JKF ARCHITECTURE
625 LYNNDALE CT., SUITE F, GREENVILLE, NC 27858 252-355-1068

CRAVEN COMMUNITY COLLEGE
CORPORATE TRAINING CENTER
NEW BERN, NC

DRAWING TITLE
BUILDING CODE ANALYSIS, LEGENDS, SYMBOLS & ABBREVIATIONS

SCALE	AS NOTED
DRAWN	MCZ
CHECKED	JKF
DATE	9-1-2024
PROJECT NO.	2023-09
DRAWING NO	BC1.0

COPYRIGHT. JKF ARCHITECTURE PC. JOHN K. FARKAS, AIA

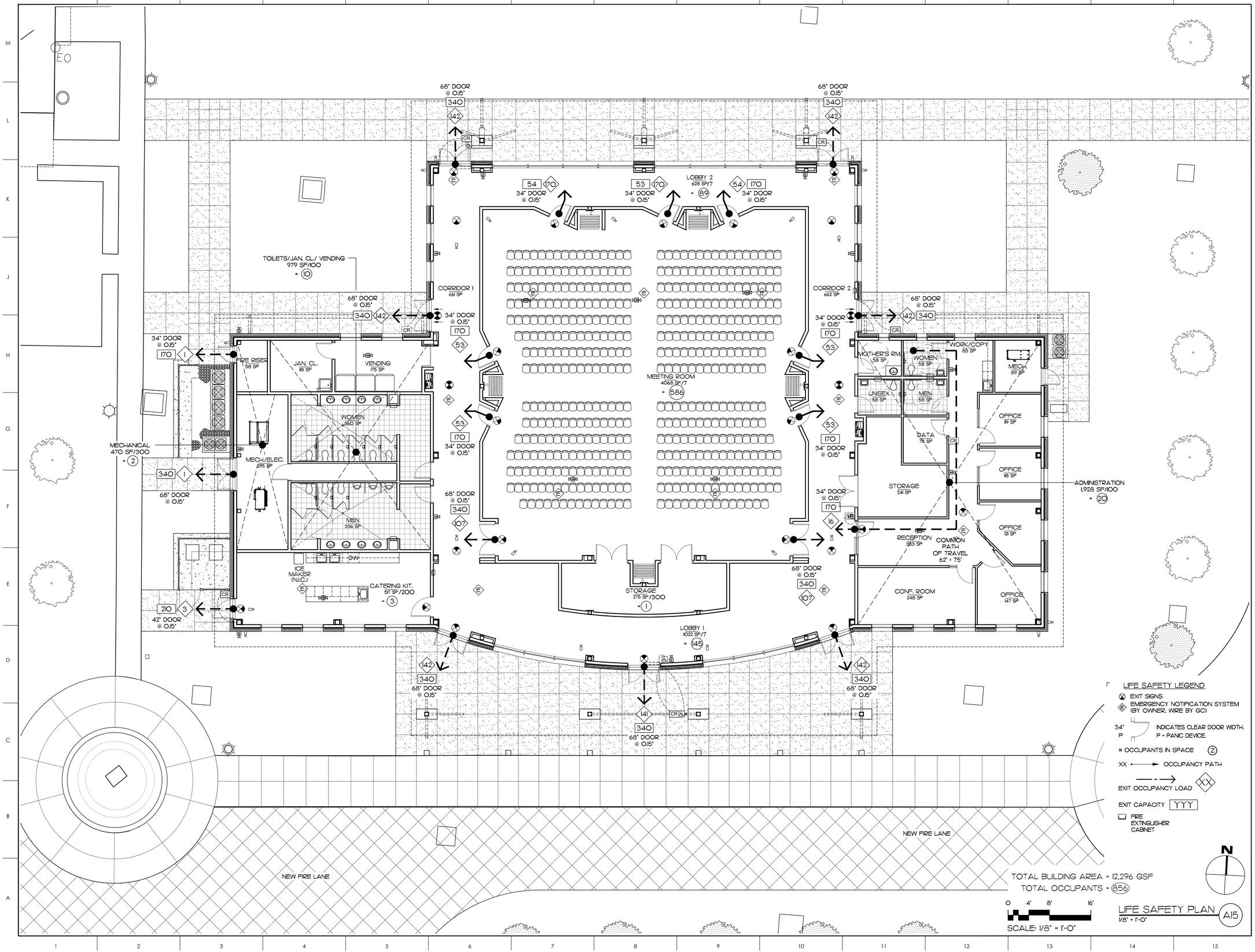

LIFE SAFETY LEGEND

- EXIT SIGNS
- E — EMERGENCY NOTIFICATION SYSTEM (BY OWNER, WIRE BY GC)
- 34" P — INDICATES CLEAR DOOR WIDTH. P = PANIC DEVICE.
- = OCCUPANTS IN SPACE (Z)
- XX ——→ OCCUPANCY PATH
- EXIT OCCUPANCY LOAD (XX)
- EXIT CAPACITY YYY
- FIRE EXTINGUISHER CABINET

TOTAL BUILDING AREA = 12,296 GSF
TOTAL OCCUPANTS = 856

0 4' 8' 16'
SCALE: 1/8" = 1'-0"

LIFE SAFETY PLAN A1.5
1/8" = 1'-0"

N

MATERIALS KEYING LEGEND

GENERAL NOTES

ESTIMATED SEATING:
456 SEATING ONLY
192 LECTURE STYLE

KEY PLAN

SCO ID #23-26923-01A

NO	REVISION	DATE

SEAL
JOHN K. FARKAS REGISTERED ARCHITECT GREENVILLE, N.C. 10/8/2024 5822

JKF ARCHITECTURE

625 LYNNDALE CT., SUITE F, GREENVILLE, NC 27858 252-355-1068

CRAVEN COMMUNITY COLLEGE
CORPORATE TRAINING CENTER
NEW BERN, NC

DRAWING TITLE
LIFE SAFETY PLAN

SCALE	1/8" = 1'-0"
DRAWN	BTP
CHECKED	JKF
DATE	9-1-2024
PROJECT NO.	2023-09

DRAWING NO
BCI.1

© COPYRIGHT, JKF ARCHITECTURE P.C., JOHN K. FARKAS, AIA

CONSTRUCTION DOCUMENTS FOR

CRAVEN COMMUNITY COLLEGE CORPORATE TRAINING CENTER

CITY OF NEW BERN, CRAVEN COUNTY, NC

SITE DATA	
PROJECT INFO:	CRAVEN COMMUNITY COLLEGE, CORPORATE TRAINING CENTER 800 COLLEGE CT, NEW BERN, NC 28562
MUNICIPALITY:	CITY OF NEW BERN
PARCEL ID :	8-212 -020
DEED REFERENCE:	D.B. 755 PG. 108
SITE AREA:	±100.2 ACRES
SITE/LOT ZONING:	C-5
ADJACENT LOT ZONING:	C-3 R-15 R-10 R-10 A
PROPOSED USE:	TRAINING CENTER
PROPOSED GROSS FLOOR AREA:	±12,296 SF
BUILDING HEIGHT:	±23.0'
IMPERVIOUS AREAS	
SITE LOT AREA:	±1.53 AC
EXISTING IMPERVIOUS:	TBD
BUILDING (ROOF):	±15,905SF
PAVEMENT:	4,337 SF
CONCRETE SIDEWALK:	7,948 SF
GRASS OVER CABC:	7,047 SF
TOTAL IMPERVIOUS:	TBD
LOT COVERAGE:	TBD
SITE SETBACKS	MINIMUM
FRONT	25'
SIDE	15'
REAR	25'
SITE BUFFERYARD	Minimum / Notes
	None
PARKING SUMMARY	Refer to new sheet C1.0 "Overall Campus Site Plan"
CAMPUS BUILDING AREA	EX. = 263,609 SF, PRO. = 275,905 SF
EX. PARKING SPACES PROVIDED:	1310 TOTAL (67 HC)
PRO. NEW PARKING (HC) SPACES:	New parking spaces are not proposed.



VICINITY MAP
1" = 500'

Sheet List Table	
Sheet Number	Sheet Title
C0.0	COVER SHEET
1 OF 1	TOPOGRAPHICAL SURVEY
C0.1	EXISTING CONDITIONS AND DEMOLITION PLAN
C1.0	OVERALL CAMPUS SITE PLAN
C1.1	SITE PLAN
C2.1	GRADING DRAINAGE & UTILITY PLAN
C3.1	STORMWATER CONTROL PLAN
C3.2	STORMWATER CONTROL NOTES
C4.1	SEDIMENTATION & EROSION CONTROL PLAN - STAGE 1
C4.2	SEDIMENTATION & EROSION CONTROL PLAN - STAGE 2
C5.1	SEDIMENTATION & EROSION CONTROL DETAILS
C5.2	SEDIMENTATION & EROSION CONTROL DETAILS
C6.1	NPDES DETAILS & NOTES
C7.1	SITE DETAILS
C8.1	WATER DETAILS
C9.1	SEWER DETAILS
C10.1	DRAINAGE DETAILS
L1.1	WETLAND PLANTING PLAN
L1.02	LANDSCAPE PLAN

GENERAL NOTES:

1. *CONTRACTOR MUST NOTIFY NORTH CAROLINA ONE-CALL CENTER, INC. (NC-811) AT LEAST 72 HOURS PRIOR TO THE START OF EXCAVATION TO HAVE ALL UNDERGROUND UTILITIES LOCATED PRIOR TO EXCAVATING OR TRENCHING.*
2. *ELECTRIC AND TELEPHONE UTILITIES SHALL BE INSTALLED UNDERGROUND.*
3. *ALL REQUIRED IMPROVEMENTS SHALL COMPLY WITH THE CITY OF NEW BERN STANDARDS AND DETAILS.*
4. *CONSTRUCTION PLAN APPROVAL FROM CITY OF NEW BERN AND NCDEQ SHALL BE OBTAINED PRIOR TO CONSTRUCTION OF ANY STREET, WATER, SANITARY SEWER OR AND STORM DRAINAGE SYSTEMS. AN EROSION CONTROL PLAN APPROVAL IS REQUIRED, AND AN EROSION CONTROL PERMIT SHALL BE OBTAINED PRIOR TO START OF LAND DISTURBANCE ACTIVITY.*
5. *THIS SITE IS NOT LOCATED IN A ZONE 'X' (AREA DETERMINED TO BE OUTSIDE 0.2% ANNUAL CHANCE 100 YEAR FLOODPLAIN) AS IDENTIFIED BY FEMA FLOOD INSURANCE RATE MAP 3720556000K, EFFECTIVE JUNE 19, 2020.*
6. *BUILDINGS MUST MEET ALL APPLICABLE BUILDING CODES. SITE SHALL MEET ALL RELEVANT NORTH CAROLINA ACCESSIBILITY CODE REQUIREMENTS.*
7. *NCDOT DRIVEWAY PERMIT IS NOT REQUIRED.*
8. *REFUSE COLLECTION SHALL BE PROVIDED BY PRIVATE CONTRACTOR FROM THE EXISTING ON-SITE COLLECTION FACILITY.*
9. *ALL DIMENSIONS ARE TO BACK OF CURB UNLESS OTHERWISE NOTED.*
10. *APPROVAL OF SITE PLAN DOES NOT CONSTITUTE APPROVAL OF SIGNS. SEPARATE SIGN PERMITS MAY BE REQUIRED.*
11. *CONTRACTOR SHALL NOTIFY PUBLIC WORKS STREET MAINTENANCE DIVISION 48 HOURS PRIOR TO MAKING CONNECTIONS TO EXISTING STORM DRAINS LOCATED WITHIN PUBLIC STORM DRAINAGE EASEMENTS OR R/W.*
12. *ACCESS TO PUBLIC UTILITIES MUST BE CONTINUOUSLY AVAILABLE FOR ADJACENT COLLEGE BUILDINGS. CONTRACTOR WILL COORDINATE WITH COLLEGE UTILITY SERVICES 48 HOURS IN ADVANCE OF CONNECTION TO EXISTING UTILITY SERVICE MAINS.*
13. *NO BUILDINGS, STRUCTURES OR OTHER IMPROVEMENTS, MATERIALS AND SURFACES, INCLUDING BUT NOT LIMITED TO PRINCIPLE AND ACCESSORY STRUCTURES AND ADDITIONS AND APPURTENANCES THERETO, SIGNAGE, FENCES, WALLS, MECHANICAL EQUIPMENT, CANOPIES, ANTENNAS, MASTS, DEBRIS, SOLID WASTE COLLECTION CONTAINERS, MAIL RECEPTACLES AND IMPERVIOUS SURFACES SHALL ENCROACH WITHIN ANY DEDICATED EASEMENT WITHOUT PRIOR APPROVAL, AS APPROPRIATE.*
14. *ALL SITE LIGHTING SHALL COMPLY WITH THE CITY OF NEW BERN LIGHTING STANDARDS AND DETAILS.*
15. *NEW BUILDINGS MUST COMPLY WITH NC FIRE CODE SECTION 510-EMERGENCY RESPONDER RADIO COVERAGE.*
16. *PRIVATE FIRE MAINS REQUIRE PERMITS FROM NEW BERN FIRE-RESCUE AND SHALL BE INSPECTED BY THE FIRE CODE OFFICIAL. PERMIT APPLICATIONS CAN BE FOUND AT: https://www.newbernnc.gov/departments/fire_department/fire_protection_systems.php*
17. *FIRE MAINS, SPRINKLER RISERS, & FIRE HYDRANTS VALVE BOXES REQUIRE CAPS THAT STATE "FIRE."*

CIVIL ENGINEER

Rivers & Associates, Inc.
Greenville and Raleigh, NC

Rivers & ASSOCIATES, INC. Since 1918

107 East Second Street
Greenville, NC 27858
(252) 752-4135

353 East Six Forks Road, Suite 230
Raleigh, NC 27609
(919) 594-1626 ext. 6300

Contact: Brian Ruff, PE
bruff@riversandassociates.com

ARCHITECT

JKF Architecture, P.C.
Greenville, NC

JKF ARCHITECTURE

625 Lynndale Court, Suite F
Greenville, NC 27858
(252) 355-1068

Contact: John K. Farkas,
AIA LEED-AP BD+C
jkf@jkf-arch.com

GENERAL NOTES

RAI Project #2023139

Rivers & ASSOCIATES, INC. Since 1918
riversandassociates.com
NC License: F-0334
Six Forks Place III Ste. 230
353 E. Six Forks Road
Raleigh, NC 27609
919.594.1626
Engineers
Planners
Surveyors
Landscape Architects

SCO ID # 23-26923-01A

NO	REVISION	DATE

SEAL

NORTH CAROLINA PROFESSIONAL ENGINEER SEAL 025010 BRIAN P. RUFF

JKF ARCHITECTURE

625 LYNNDALE CT., SUITE F, GREENVILLE, NC 27858 252-355-1068

CRAVEN COMMUNITY COLLEGE
CORPORATE TRAINING CENTER
CITY OF NEW BERN - CRAVEN COUNTY - NC

DRAWING TITLE
COVER SHEET

SCALE: AS SHOWN	DRAWING NO: C0.0
DRAWN: MS, CS	
CHECKED: JSJ, BPR	
DATE: 9-1-2024	
PROJECT NO.: 2023139	

© COPYRIGHT, JKF ARCHITECTURE PC. JOHN K. FARKAS, AIA

R:\LANDREV\JKF_ARCH-CCC_CORP_TRNG_CTR-2023139\CADD_DWG\SHEETS\C0.0 COVER SHEET.DWG - C 0.0 COVER SHEET - 9/20/2024 1:04:24 PM

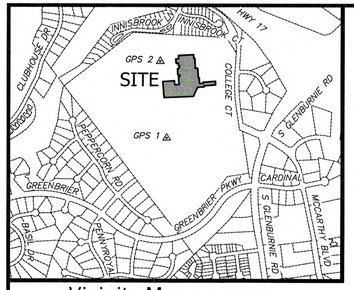

Vicinity Map SCALE: 1" = 1000'

△ CPSMN GPS 2 (#2)

NCGRID NAD83/2011

LEGEND

9 / 10 / 7	CONTOURS
	DEPRESSED CONTOUR
	BUILDING
	CANOPY/BUILDING OVERHANG
G	GAS LINE (GL) (APPROXIMATE FROM SCHEMATICS)
C	UNDERGROUND COMMUNICATION LINE (APPROXIMATE FROM SCHEMATICS)
T	UNDERGROUND TELEPHONE LINE (APPROXIMATE FROM SCHEMATICS)
UGE	UNDERGROUND ELECTRIC LINE (APPROXIMATE FROM SCHEMATICS))
FM	SANITARY SEWER FORCE MAIN LINE (FM) (APPROXIMATE FROM SCHEMATICS)
S	SANITARY SEWER LINE (SS) (APPROXIMATE FROM SCHEMATICS)
FO	UNDERGROUND FIBER OPTIC (APPROXIMATE FROM SCHEMATICS)
	STORM DRAINAGE PIPE
W	WATER LINE (WL) (APPROXIMATE FROM SCHEMATICS)
	TOP OF BANK (DITCH/SLOPE)
	TOE OF BANK (DITCH/SLOPE)
	CENTERLINE OF DITCH
	EDGE OF RIPRAP
50.0 NG	NATURAL GROUND
50.00 TW	TOP OF WALL
50.00 TA	TOP OF ASPHALT
50.00 BC	BACK OF CURB
50.00 TC	TOP OF CONCRETE
50.0 CLD	TOP OF CENTERLINE OF DITCH
50.0 TOE	TOE OF BANK
50.0 TB	TOP OF BANK
	SIGN
EB, EB	ELECTRIC BOXES
EV	ELECTRICAL VAULT
EO	ELECTRICAL OUTLET
EC	ELECTRICAL CONNECTION BOX
ESO	EMERGENCY SHUT OFF
3PC	3" PVC CONDUIT
2.5" COND	2.5" CONDUIT
T	ELECTRICAL TRANSFORMER
WV	WATER VALVE
FH	FIRE HYDRANT
WM	WATER METER
FDC	FIRE DEPARTMENT CONNECTION
HB	HOSE BIBB
WM	WATER METER BOX
PIV	POST INDICATOR VALVE
CBBC	CATCH BASIN BACK OF CURB
DI	DRAINAGE INLET
S	SANITARY SEWER MANHOLE (MHSS)
CO	CLEAN OUT
MP	METAL POST
TP	TELEPHONE PEDESTAL
FOM	FOBER OPTIC MARKER
FOV	FIBER OPTIC VAULT
U	UNKNOWN UTILITY MAHNOLE
	BOLLARD LIGHT
	AREA LIGHT
	LIGHT POLE (LP) (BASES VARY)
DV	DRYER VENT
	TREE STUMP
HCB	HANDICAP ACCESS BUTTON
SB	SECURITY ACCESS BUTTON
SCR	SECURITY ACCESS CARD READER
TBM	TEMPORARY BENCH MARK
CPMNS (#)	HORIZONTAL CONTROL POINT (SET MAG NAIL OR SPIKE)
D.B.	DEED BOOK
PG.	PAGE
P.N.	PARCEL NUMBER
CP	CONCRETE PIPE
HDPE	HIGH DENSITY POLY-ETHYLENE PIPE
PVC	POLYVINYL CHLORIDE (WL)
CI	CAST IRON (WL)
ABS	ASBESTOS PIPE
CONC.	CONCRETE
MTL.	METAL
OS	OUTLET CONTROL STRUCTURE
COND.	CONDUIT
INV.	INVERT
L/A	LANDSCAPED AREA
FFE	FINISHED FLOOR ELEVATION
BP	BRADFORD PEAR (TREE)
ORN	ORNAMENTAL (TREE)
CM	CREPE MYRTLE (TREE)
INV.	INVERT
TYP.	TYPICAL
N.O.	NOT OBSERVABLE
	ASPHALT
	CONCRETE
	CRUSHED ROCK/RIP RAP

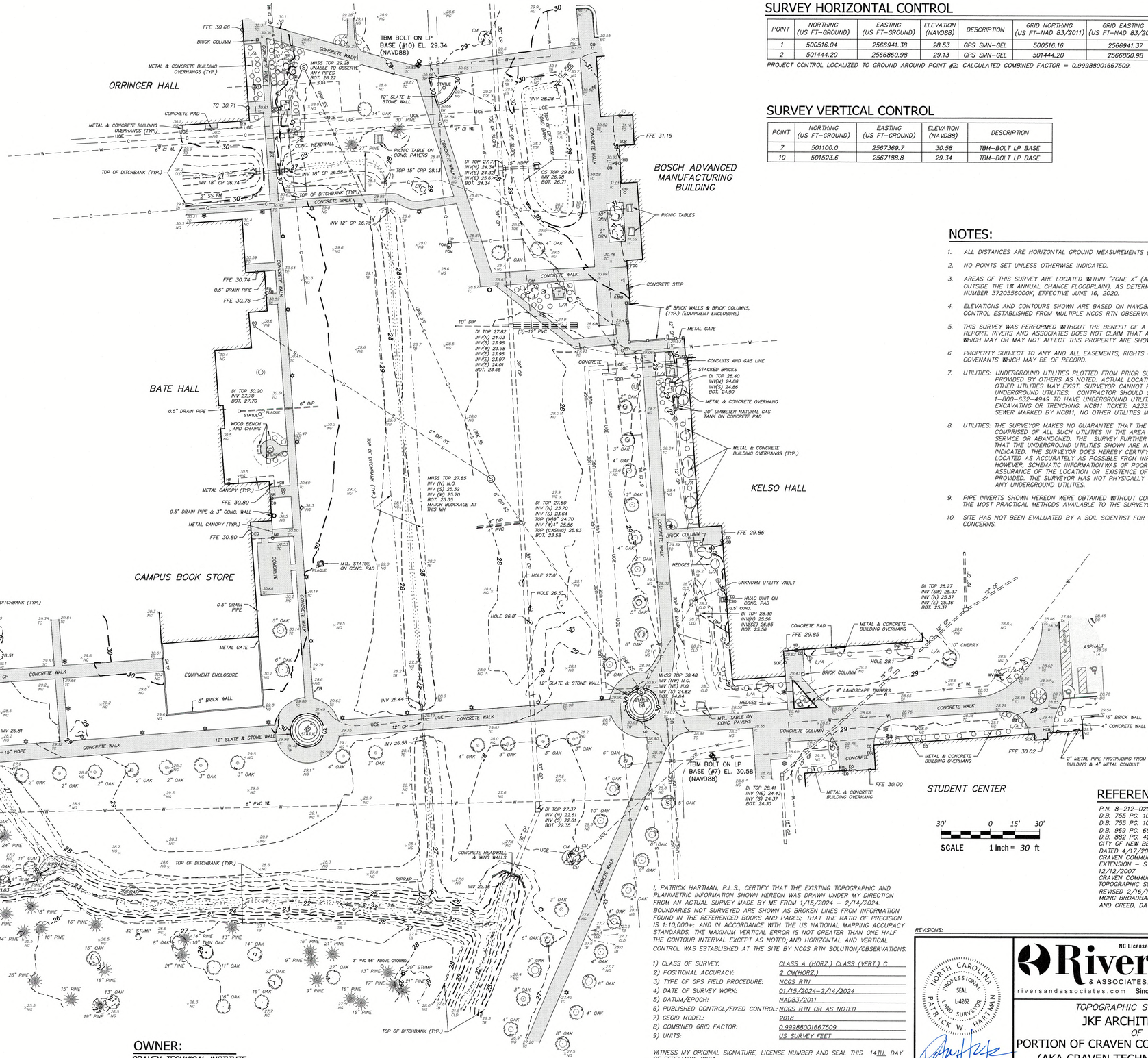

SURVEY HORIZONTAL CONTROL

POINT	NORTHING (US FT–GROUND)	EASTING (US FT–GROUND)	ELEVATION (NAVD88)	DESCRIPTION	GRID NORTHING (US FT–NAD 83/2011)	GRID EASTING (US FT–NAD 83/2011)
1	500516.04	2566941.38	28.53	GPS SMN–GEL	500516.16	2566941.37
2	501444.20	2566860.98	29.13	GPS SMN–GEL	501444.20	2566860.98

PROJECT CONTROL LOCALIZED TO GROUND AROUND POINT #2; CALCULATED COMBINED FACTOR = 0.99988001667509.

SURVEY VERTICAL CONTROL

POINT	NORTHING (US FT–GROUND)	EASTING (US FT–GROUND)	ELEVATION (NAVD88)	DESCRIPTION
7	501100.0	2567369.7	30.58	TBM–BOLT LP BASE
10	501523.6	2567188.8	29.34	TBM–BOLT LP BASE

NOTES:

1. ALL DISTANCES ARE HORIZONTAL GROUND MEASUREMENTS (US SURVEY FOOT).
2. NO POINTS SET UNLESS OTHERWISE INDICATED.
3. AREAS OF THIS SURVEY ARE LOCATED WITHIN "ZONE X" (AREAS DETERMINED TO BE OUTSIDE THE 1% ANNUAL CHANCE FLOODPLAIN), AS DETERMINED FROM FIRM MAP NUMBER 3720556000K, EFFECTIVE JUNE 16, 2020.
4. ELEVATIONS AND CONTOURS SHOWN ARE BASED ON NAVD88 DATUM. VERTICAL CONTROL ESTABLISHED FROM MULTIPLE NCGS RTN OBSERVATIONS (CLASS C)
5. THIS SURVEY WAS PERFORMED WITHOUT THE BENEFIT OF A TITLE COMMITMENT REPORT. RIVERS AND ASSOCIATES DOES NOT CLAIM THAT ALL MATTERS OF RECORD WHICH MAY OR MAY NOT AFFECT THIS PROPERTY ARE SHOWN HEREON.
6. PROPERTY SUBJECT TO ANY AND ALL EASEMENTS, RIGHTS OF WAY, RESTRICTIVE COVENANTS WHICH MAY BE OF RECORD.
7. UTILITIES: UNDERGROUND UTILITIES PLOTTED FROM PRIOR SURVEYS AND MAPS PROVIDED BY OTHERS AS NOTED. ACTUAL LOCATIONS MAY VARY. OTHER UTILITIES MAY EXIST. SURVEYOR CANNOT PROVIDED ACCURACY OF UNDERGROUND UTILITIES. CONTRACTOR SHOULD CONTACT NC811 AT 1–800–632–4949 TO HAVE UNDERGROUND UTILITIES LOCATED PRIOR TO EXCAVATING OR TRENCHING. NC811 TICKET: A233550662. ONLY MINIMAL SEWER MARKED BY NC811, NO OTHER UTILITIES MARKED.
8. UTILITIES: THE SURVEYOR MAKES NO GUARANTEE THAT THE UTILITIES SHOWN ARE COMPRISED OF ALL SUCH UTILITIES IN THE AREA OF SURVEY EITHER IN SERVICE OR ABANDONED. THE SURVEY FURTHER DOES NOT WARRANT THAT THE UNDERGROUND UTILITIES SHOWN ARE IN THE EXACT LOCATION INDICATED. THE SURVEYOR DOES HEREBY CERTIFY THAT ALL UTILITIES ARE LOCATED AS ACCURATELY AS POSSIBLE FROM INFORMATION AVAILABLE. HOWEVER, SCHEMATIC INFORMATION WAS OF POOR QUALITY AND NO ASSURANCE OF THE LOCATION OR EXISTENCE OF ANY UTILITY CAN BE PROVIDED. THE SURVEYOR HAS NOT PHYSICALLY UNCOVERED AND LOCATED ANY UNDERGROUND UTILITIES.
9. PIPE INVERTS SHOWN HEREON WERE OBTAINED WITHOUT CONFINED SPACE ENTRY BY THE MOST PRACTICAL METHODS AVAILABLE TO THE SURVEYOR.
10. SITE HAS NOT BEEN EVALUATED BY A SOIL SCIENTIST FOR ENVIRONMENTAL CONCERNS.

REFERENCES:

P.N. 8–212–020
D.B. 755 PG. 104
D.B. 755 PG. 108 (EASEMENT)
D.B. 969 PG. 653 (BLANKET EASEMENT)
D.B. 882 PG. 420
CITY OF NEW BERN ELECTRIC LINE DRAWING DATED 4/17/2007
CRAVEN COMMUNITY COLLEGE WATERLINE EXTENSION – STEWART ENGINEERING, DATED 12/12/2007
CRAVEN COMMUNITY COLLEGE PARTIAL TOPOGRAPHIC SURVEY BY ROBERT H. DAVIS, REVISED 2/16/11.
MCNC BROADBAND EXPANSION BY MCKIM AND CREED, DATED 9/02/2011.

OWNER:
CRAVEN TECHNICAL INSTITUTE
GENERAL DELIVERY
NEW BERN NC 28562

SITE ADDRESS: 800 COLLEGE CT.

I, PATRICK HARTMAN, P.L.S., CERTIFY THAT THE EXISTING TOPOGRAPHIC AND PLANIMETRIC INFORMATION SHOWN HEREON WAS DRAWN UNDER MY DIRECTION FROM AN ACTUAL SURVEY MADE BY ME FROM 1/15/2024 – 2/14/2024. BOUNDARIES NOT SURVEYED ARE SHOWN AS BROKEN LINES FROM INFORMATION FOUND IN THE REFERENCED BOOKS AND PAGES; THAT THE RATIO OF PRECISION IS 1:10,000+; AND IN ACCORDANCE WITH THE US NATIONAL MAPPING ACCURACY STANDARDS, THE MAXIMUM VERTICAL ERROR IS NOT GREATER THAN ONE HALF THE CONTOUR INTERVAL EXCEPT AS NOTED; AND HORIZONTAL AND VERTICAL CONTROL WAS ESTABLISHED AT THE SITE BY NCGS RTN SOLUTION/OBSERVATIONS.

1) CLASS OF SURVEY: CLASS A (HORZ.) CLASS (VERT.) C
2) POSITIONAL ACCURACY: 2 CM(HORZ.)
3) TYPE OF GPS FIELD PROCEDURE: NCGS RTN
4) DATE OF SURVEY WORK: 01/15/2024–2/14/2024
5) DATUM/EPOCH: NAD83/2011
6) PUBLISHED CONTROL/FIXED CONTROL: NCGS RTN OR AS NOTED
7) GEOID MODEL: 2018
8) COMBINED GRID FACTOR: 0.99988001667509
9) UNITS: US SURVEY FEET

WITNESS MY ORIGINAL SIGNATURE, LICENSE NUMBER AND SEAL THIS 14TH. DAY OF FEBRUARY, 2024.

PROFESSIONAL LAND SURVEYOR LICENSE NO. L–4262

REVISIONS:

NORTH CAROLINA PROFESSIONAL LAND SURVEYOR SEAL L-4262 PATRICK W. HARTMAN
DATE 2/14/2024

NC License: F-0334
Rivers & ASSOCIATES, INC.
riversandassociates.com Since 1918
Engineers Planners Surveyors Landscape Architects
107 East Second Street Greenville, NC 27858 (252) 752-4135

TOPOGRAPHIC SURVEY FOR
JKF ARCHITECTURE
OF
PORTION OF CRAVEN COMMUNITY COLLEGE (AKA CRAVEN TECHNICAL INSTITUE)
NEW BERN, TOWNSHIP #8, CRAVEN COUNTY, NORTH CAROLINA

SURVEY PH/JP	DRAFT PH/MS	SCALE	DRAWING NO.	PROJECT NO.	SHEET
DESIGN	CHECK PWH	1" = 30'	W – 4158	2023142	1 OF 1

P:\LandDev\JKF Arch_CCC Survey-2023\142\SURVEY\ DWG\W-4158_JKF_Craven_CC.dwg-Layout1: HARTMP-19-Feb-24 @ 3:47:23 PM


ORRINGER HALL
BATE HALL
CAMPUS BOOK STORE
BOSCH ADVANCED MANUFACTURING BUILDING
KELSO HALL
STUDENT CENTER
9
130
GEL
CPSMN GPS 2 (#2)
TBM BOLT ON LP BASE (#10) EL. 29.34 (NAVD88)
TBM BOLT ON LP BASE (#7) EL. 30.58 (NAVD88)
FFE 30.66
FFE 30.74
FFE 30.76
FFE 30.80
FFE 30.80
FFE 31.15
FFE 29.86
FFE 29.85
FFE 30.02
FFE 30.00
REMOVE EX. TREES. REMOVED TREES TO BE REPLACED, SEE SHEET L1.2
REMOVE SANITARY SEWER LINE (SEE UTILITY PLAN)
REMOVE STORM WATER LINE (SEE UTILITY PLAN)
CONTRACTOR FIELD LOCATE UNDER GROUND ELECTRIC LINES AND RELOCATE (SEE UTILITY PLAN)
DEMOLISH AND REPLACE WITH 5" CONC AND SCORED AS BEFORE
CONTRACTOR SHALL REMOVE STREET LIGHTS (SEE UTILITY PLAN)
CONTRACTOR SHALL REMOVE AND REPLACE SIDEWALK
EX. OAK TREES TO BE RELOCATED, SEE SHEET L1.2 FOR NEW LOCATIONS
EX. OAK TREES TO BE RELOCATED, SEE SHEET L1.2 FOR NEW LOCATIONS
EX. DI106 RIM: 29.37 INV. 24.34' (N) INV. 25.67' (E) INV. 24.32' (S-OUT)
(3) EX 12" PVC INV. 23.96 (W-OUT) INV. 23.97 (W-OUT) INV. 24.04 (W-OUT)
EX.DI2 RIM: 28.38 INV. 24.86' (S) INV. 24.71' (N-OUT)
EX. DI106 RIM: 27.59 INV. 21.66' (N) INV. 21.82' (S+OUT)
EX.DI1 RIM: 28.29 INV. 26.85' (SE) INV. 25.56' (N-OUT)
DI TOP 28.27 INV (SW) 25.37 INV (N) 25.37 INV (E) 25.36 BOT. 25.37
DI TOP 27.72 INV(N) 24.34 INV(S) 24.32 INV(E) 25.67 BOT. 24.34
DI TOP 29.80 INV 26.98 BOT. 26.7
DI TOP 30.20 INV 27.70 BOT. 27.70
DI TOP 27.37 INV (N) 22.61 INV (S) 22.61 BOT. 22.35
DI TOP 28.41 INV (NE) 24.43 INV (S) 24.37 BOT. 24.30
MHSS TOP 30.48 INV (NW) N.A. INV (NE) 24.62 INV (S) 24.62 BOT. 24.64
MHSS TOP 28.67 INV (N) 24.14 INV (SE) 24.16 BOT. 24.17
CB 27.92 INV (E) 23.42 INV (W) 23.47 BOT. 22.39
CB 27.99 INV (E) 23.39 INV (W) 23.3± BOT. 22.56
INV 18" CP 26.74
INV 18" CP 26.58
TOP 15" CPP 28.13
INV 12" CP 26.76
INV 10" DIP 23.65
INV 6" DIP 23.65
INV 6" DIP 24.02
INV 6" DIP 24.02
INV 6" DIP 23.97
INV 6" DIP 23.97
INV 6" DIP 23.97
INV 6" DIP 23.97
INV 6" DIP 24.01
INV 6" DIP 24.01
INV 6" DIP 23.97
INV 6" DIP 23.97
INV 6" DIP 23.97
INV 6" DIP 23.97
INV 6" DIP 24.01
INV 6" DIP 24.01
INV 6" DIP 24.01



SCALE: NOT TO SCALE

GENERAL NOTES

CAMPUS PARKING DATA

CODE PARKING REQUIREMENT :	1 PARKING SPACE/150 SF GFA
EXISTING CAMPUS BUILDINGS' GROSS FLOOR AREA:	+/-263,609 SF GFA
EXISTING CAMPUS BUILDINGS' PARKING SPACES REQUIRED :	1,758
EXISTING CAMPUS BUILDINGS' PARKING SPACES PROVIDED :	1,310 (INCLUDES 71 HC SPACES)
PROPOSED CORPORATE TRAINING CENTER:	+/-12,296 SF GFA
PROPOSED PARKING SPACES REQUIRED :	82
PROPOSED PARKING SPACES PROVIDED:	0
TOTAL PARKING SPACES REQUIRED :	1,840
TOTAL PARKING SPACES PROVIDED:	1,310 (INCLUDES 71 HC SPACES)
TOTAL PARKING RATIO PROVIDED :	1 PARKING SPACE/211 SF GFA

PARKING NOTES:

1. EXISTING BUILDING GFA & PARKING DATA PROVIDED BY CRAVEN COMMUNITY COLLEGE, EXECUTIVE DIRECTOR OF FACILITIES, 800 COLLEGE COURT, NEW BERN, NC 28562, 252-638-7260.
2. ADDITIONAL PARKING DATA SECURED FROM CRAVEN COUNTY GIS & GOOGLE MAPS.
3. BASED ON CURRENT AND HISTORICAL PARKING CONDITIONS AND TRENDS EXPERIENCED BY THE PROPERTY OWNER AND MANAGERS, IT IS THEIR BELIEF THAT ADEQUATE VEHICLE PARKING SPACE IS PROVIDED FOR BOTH THE EXISTING BUILDINGS AND THE PROPOSED CORPORATE TRAINING CENTER.
4. OWNER REQUESTS THAT THE CITY OF NEW BERN CONSIDER GRANTING THIS CAMPUS A DEVIATION FROM THE REQUIREMENT OF 1 SPACE PER 150 SF OF GROSS FLOOR AREA IN ACCORDANCE WITH SECTION 15-343. - "FLEXIBILITY IN ADMINISTRATION REQUIRED." THE PROPOSED PARKING RATIO IS 1 SPACE PER 211 SF OF GFA.

RAI Project #2023139

NC License: F-0334

Rivers & ASSOCIATES, INC. Since 1918

riversandassociates.com

Six Forks Place III Ste. 230
353 E. Six Forks Road
Raleigh, NC 27609
919.594.1626

Engineers
Planners
Surveyors
Landscape Architects

SCO ID # 23-26923-01A

NO.	REVISION	DATE

SEAL

NORTH CAROLINA REGISTERED LANDSCAPE ARCHITECT 0755 PAUL R. MEYER 10/18/24

JKF ARCHITECTURE

625 LYNNDALE CT., SUITE F, GREENVILLE, NC 27858 252-355-1068

CRAVEN COMMUNITY COLLEGE
CORPORATE TRAINING CENTER
CITY OF NEW BERN - CRAVEN COUNTY - NC

DRAWING TITLE

OVERALL CAMPUS SITE PLAN

SCALE: AS SHOWN	DRAWING NO: C1.0
DRAWN: TAH, MS, CS	
CHECKED: PRM, JSJ, BPR	
DATE: 9-1-2024	
PROJECT NO.: 2023139	

© COPYRIGHT, JKF ARCHITECTURE PC, JOHN K. FARKAS, AIA

R:\LANDDEV\JKF_ARCH-CCC_CORP_TRNG_CTR-2023139\CAD\D_DWG\SHEETS\C1.0 OVERALL CAMPUS SITE PLAN.DWG - CAMPUS - 10/18/2024 10:56:07 AM

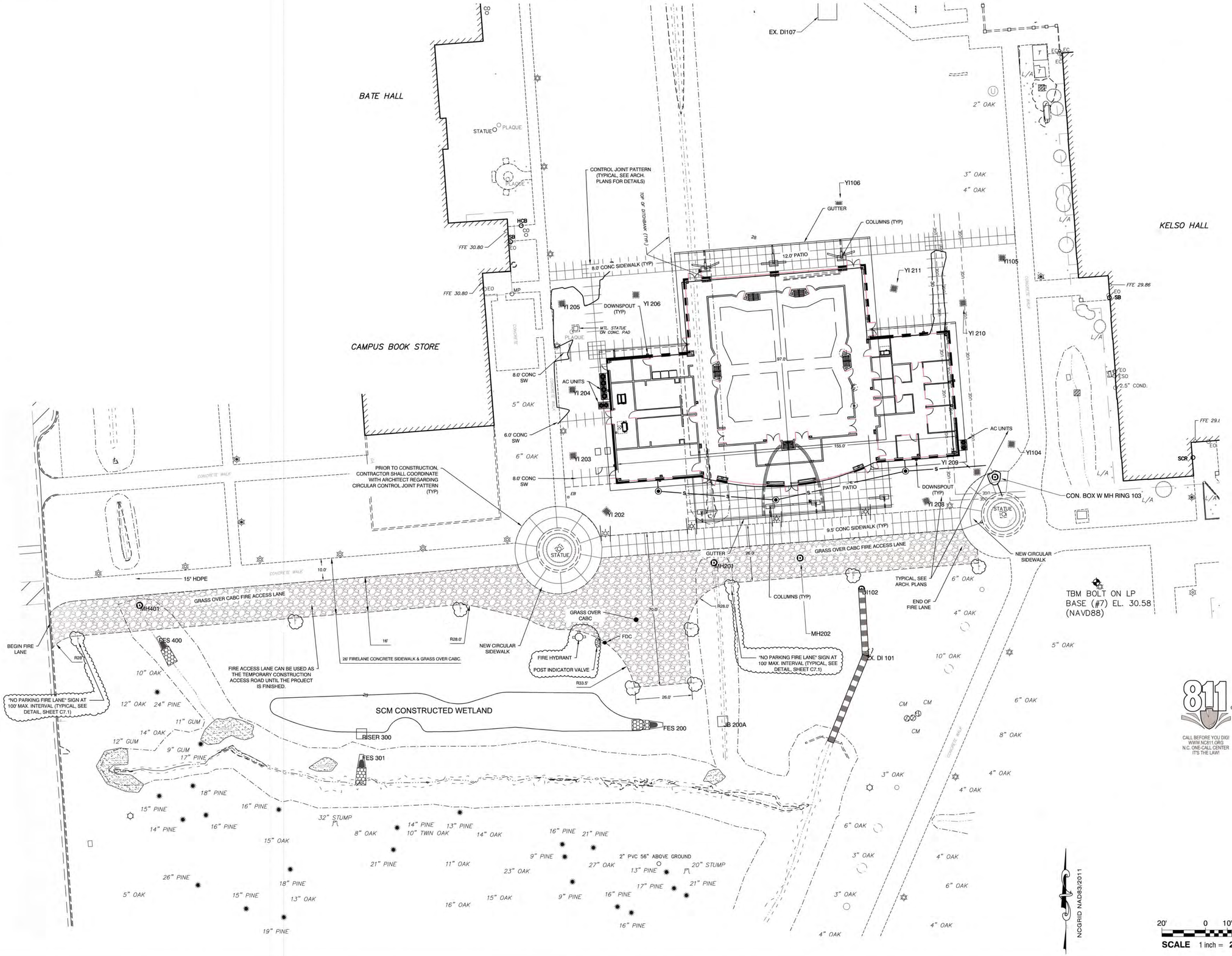

GENERAL NOTES

1. ALL SITE WORK SHALL BE DONE IN ACCORDANCE WITH THE PLANS PREPARED BY RIVERS AND ASSOCIATES, INC., THE CURRENT REQUIREMENTS OF THE CITY/TOWN OF NEW BERN, THE APPLICABLE SECTIONS OF THE NCDOT STANDARD SPECIFICATIONS FOR ROADWAY CONSTRUCTION, AND ALL OTHER PERTINENT FEDERAL, STATE AND LOCAL LAWS.
2. THE CONTRACTOR SHALL COMPLY AT ALL TIMES WITH APPLICABLE FEDERAL, STATE AND LOCAL LAWS, PROVISIONS, AND POLICIES GOVERNING SAFETY AND HEALTH, INCLUDING THE FEDERAL CONSTRUCTION SAFETY ACT (PUBLIC LAW 91-54), FEDERAL REGISTER, CHAPTER XVII, PART 1926 OF TITLE 29 REGULATIONS, OCCUPATIONAL SAFETY AND HEALTH REGULATIONS FOR CONSTRUCTION, AND SUBSEQUENT PUBLICATIONS UPDATING THESE REGULATIONS.
3. THE CONTRACTOR SHALL BE RESPONSIBLE FOR EXAMINING THE AREAS AND CONDITIONS UNDER WHICH THE PROJECT IS TO BE CONSTRUCTED PRIOR TO THE SUBMISSION OF A BID. SUBMISSION OF A BID SHALL BE CONSTRUED TO MEAN THE CONTRACTOR HAS REVIEWED THE SITE AND IS FAMILIAR WITH CONDITIONS AND CONSTRAINTS OF THE SITE.
4. BEFORE EXCAVATION, ALL UNDERGROUND UTILITIES SHALL BE LOCATED IN THE FIELD. THE CONTRACTOR SHALL NOTIFY N.C. ONE CALL AT 1-800-632-4949. THE LOCATION OF ALL UTILITIES AND UNDERGROUND STRUCTURES ARE APPROXIMATE AND MAY NOT ALL BE SHOWN. IT IS THE RESPONSIBILITY OF THE CONTRACTOR TO DETERMINE THE EXISTENCE AND EXACT LOCATION OF ALL UTILITIES AND UNDERGROUND STRUCTURES.
5. CONTRACTOR SHALL REFER TO THE GEOTECHNICAL REPORT PRIOR TO INITIATION OF ANY EARTHWORK ACTIVITY, REFERENCE TERRACON GEOTECHNICAL ENGINEERING REPORT DATED MARCH 11, 2024, TERRACON AT 314 BEACON DRIVE, WINTERVILLE NC 28590, PH. (252) 353-1600, PROJECT # 72245003. PARTICULAR NOTE IS MADE OF THE ADVISEMENT THAT "EXCESSIVELY SOFT, LOOSE, OR WET BEARING SOILS SHOULD BE OVER EXCAVATED TO A DEPTH RECOMMENDED BY THE GEOTECHNICAL ENGINEER," ON PAGE 13.
6. REFER TO THE TOPOGRAPHIC SURVEY BY RIVERS AND ASSOCIATES, DATED 2/14/2024.
7. THIS SITE IS NOT LOCATED IN A FLOOD ZONE. REFER TO FEMA FLOOD INSURANCE RATE MAP NO. 3720556000K, EFFECTIVE 6-19-2020.
8. NO BUILDINGS, STRUCTURES OR OTHER IMPROVEMENTS, MATERIALS AND SURFACES, INCLUDING BUT NOT LIMITED TO PRINCIPLE AND ACCESSORY STRUCTURES AND ADDITIONS AND APPURTENANCES THERETO, SIGNAGE, FENCES, WALLS, MECHANICAL EQUIPMENT, CANOPIES, ANNTENNAS, MASTS, DEBRIS, SOLID WASTE COLLECTION CONTAINERS, MAIL RECEPTACLES, AND IMPERVIOUS SURFACES SHALL ENCROACH WITHIN INTO A DEDICATED PUBLIC EASEMENT WITHOUT PRIOR APPROVAL OF CITY OF NEW BERN PUBLIC UTILITIES DEPARTMENT.
9. SOIL EROSION AND SEDIMENTATION CONTROL PLAN APPROVAL BY NCDENR - LAND QUALITY SECTION - IS REQUIRED PRIOR TO THE INITIATION OF ANY LAND DISTURBING ACTIVITIES.
10. APPROVAL OF THE SITE PLAN DOES NOT CONSTITUTE APPROVAL FOR THE ERECTION OF ANY EXTERIOR SIGNS. SEPARATE SIGN PERMITS MAY BE REQUIRED.
11. ALL SLOPES SHALL BE 3:1 (HORIZONTAL:VERTICAL) MAXIMUM UNLESS NOTED OTHERWISE.
12. ALL AREAS NOT PAVED SHALL BE TOPSOILED, SEEDED, MULCHED OR LANDSCAPED/SODDED UNLESS OTHERWISE NOTED IN THE CONSTRUCTION DRAWINGS, SITE SPECIFICATIONS OR AS OTHERWISE INSTRUCTED BY THE OWNER.
13. ALL REQUIRED IMPROVEMENTS SHALL COMPLY WITH THE CITY OF NEW BERN ZONING ORDINANCE.
14. REFUSE COLLECTION SHALL BE PROVIDED BY PRIVATE CONTRACTOR IN THE EXISTING WASTE CONTAINER FACILITY FOR THE COLLEGE. NO NEW WASTE BINS ARE PROPOSED.
15. CONTRACTOR IS RESPONSIBLE FOR INSTALLING AND MAINTAINING A CONSTRUCTION ACCESS DRIVEWAY A MINIMUM OF 10' WIDE FROM THE EXISTING PAVEMENT TO THE SITE AREA. INSTALL A MINIMUM DEPTH OF 6" CABC FOR PROJECT WORK. THIS DRIVE MAY BE FINISHED AT THE END OF THE PROJECT BY TOPPING OFF THE GRAVEL TO FULL DEPTH AND THEN COVERING WITH TOPSOIL, SEEDING & MULCHING -- FOR A FINISHED LAWN OVER THE FINAL FIRE ACCESS SUPPORT DRIVE.

RAI Project #2023139

NC License: F-0334
Rivers & ASSOCIATES, INC.
riversandassociates.com Since 1918
Six Forks Place III Ste. 230
353 E. Six Forks Road
Raleigh, NC 27609
919.594.1626
Engineers
Planners
Surveyors
Landscape Architects

SCO ID # 23-26923-01A

NO	REVISION	DATE

SEAL

NORTH CAROLINA PROFESSIONAL ENGINEER BRIAN P. RUFF 032508 9-30-24

811 CALL BEFORE YOU DIG! WWW.NC811.ORG N.C. ONE-CALL CENTER (IT'S THE LAW!)

JKF ARCHITECTURE
625 LYNNDALE CT., SUITE F, GREENVILLE, NC 27858 252-355-1068

CRAVEN COMMUNITY COLLEGE CORPORATE TRAINING CENTER

CITY OF NEW BERN - CRAVEN COUNTY - NC

DRAWING TITLE

SITE PLAN

SCALE	AS SHOWN
DRAWN	MS, CS
CHECKED	JSJ, BPR
DATE	9-1-2024
PROJECT NO.	2023139
DRAWING NO	C1.1

© COPYRIGHT, JKF ARCHITECTURE PC, JOHN K. FARKAS, AIA

R:\LANDDEV\JKF_ARCH-CCC_CORP_TRNG_CTR-2023139\CADD_DWG\SHEETS\C1.1 SITE PLAN.DWG - C1.1 SITE PLAN - 10/1/2024 6:08:39 PM

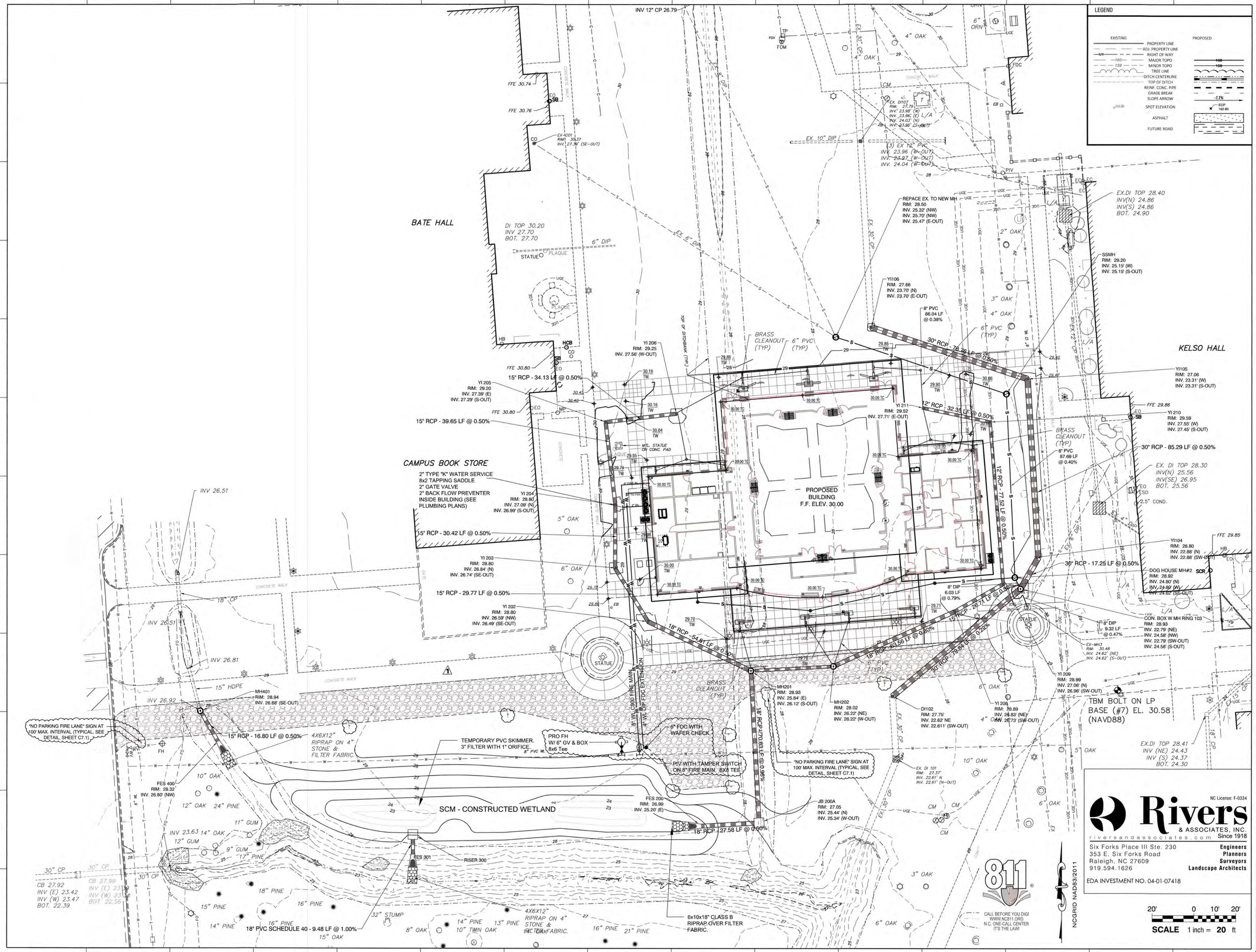
INV 12" CP 26.79
BATE HALL
DI TOP 30.20
INV 27.70
BOT. 27.70
6" DIP
EX. 6" DIP
STATUE
PLAQUE
FFE 30.74
FFE 30.76
FFE 30.80
EX-CO1
RIM: 30.37
INV: 27.39' (SE-OUT)
15" RCP - 34.13 LF @ 0.50%
YI 205
RIM: 29.20
INV. 27.39' (E)
INV. 27.29' (S-OUT)
15" RCP - 39.65 LF @ 0.50%
CAMPUS BOOK STORE
2" TYPE "K" WATER SERVICE
8x2 TAPPING SADDLE
2" GATE VALVE
2" BACK FLOW PREVENTER
INSIDE BUILDING (SEE
PLUMBING PLANS)
YI 204
RIM: 28.80
INV. 27.09' (N)
INV. 26.99' (S-OUT)
15" RCP - 30.42 LF @ 0.50%
YI 203
RIM: 28.80
INV. 26.84' (N)
INV. 26.74' (SE-OUT)
15" RCP - 29.77 LF @ 0.50%
YI 202
RIM: 28.80
INV. 26.59' (NW)
INV. 26.49' (SE-OUT)
YI 206
RIM: 29.25
INV. 27.56' (W-OUT)
BRASS CLEANOUT (TYP)
6" PVC (TYP)
TOP OF DITCHBANK (TYP.)
YI 211
RIM: 29.52
INV. 27.71' (E-OUT)
12" RCP - 32.35 LF @ 0.50%
PROPOSED BUILDING
F.F. ELEV. 30.00
12" RCP - 77.52 LF @ 0.50%
18" RCP - 54.81 LF @ 0.50%
18" RCP - 53.56 LF @ 0.50%
30" RCP - 79.84 LF @ 0.50%
15" RCP - 28.71 LF @ 0.50%
REPACE EX. TO NEW MH
RIM: 28.50
INV. 25.32' (NW)
INV. 25.70' (NW)
INV. 25.47' (E-OUT)
YI106
RIM: 27.66
INV. 23.70' (N)
INV. 23.70' (E-OUT)
8" PVC
86.04 LF
@ 0.38%
6" PVC (TYP)
EX.DI TOP 28.40
INV(N) 24.86
INV(S) 24.86
BOT. 24.90
SSMH
RIM: 29.20
INV. 25.15' (W)
INV. 25.15' (S-OUT)
KELSO HALL
YI105
RIM: 27.06
INV. 23.31' (W)
INV. 23.31' (S-OUT)
FFE 29.86
YI 210
RIM: 29.59
INV. 27.55' (W)
INV. 27.45' (S-OUT)
30" RCP - 85.29 LF @ 0.50%
EX. DI TOP 28.30
INV(N) 25.56
INV(SE) 26.95
BOT. 25.56
2.5" COND.
YI104
RIM: 26.80
INV. 22.88' (N)
INV. 22.88' (SW-OUT)
FFE 29.85
30" RCP - 17.25 LF @ 0.50%
DOG HOUSE MH#2
RIM: 28.92
INV. 24.80' (N)
INV. 24.80' (W)
INV. 24.62' (SE-OUT)
8" DIP
9.32 LF
@ 0.47%
CON. BOX W MH RING 103
RIM: 28.93
INV. 22.79' (NE)
INV. 24.58' (NW)
INV. 22.79' (SW-OUT)
INV. 24.58' (S-OUT)
YI 209
RIM: 28.99
INV. 27.06' (N)
INV. 26.96' (SW-OUT)
YI 208
RIM: 28.89
INV. 26.83' (NE)
INV. 26.73' (SW-OUT)
TBM BOLT ON LP
BASE (#7) EL. 30.58
(NAVD88)
EX.DI TOP 28.41
INV (NE) 24.43
INV (S) 24.37
BOT. 24.30
DI102
RIM: 27.75'
INV. 22.62' NE
INV. 22.611' (SW-OUT)
MH201
RIM: 28.93
INV. 25.84' (E)
INV. 26.12' (S-OUT)
MH202
RIM: 28.02
INV. 26.22' (NE)
INV. 26.22' (W-OUT)
JB 200A
RIM: 27.05
INV. 25.44' (N)
INV. 25.34' (W-OUT)
EX. DI 101
RIM: 27.37'
INV. 22.61' N
INV. 22.61' (N-OUT)
INV 26.51
18" CP
INV 26.51
INV 26.81
15" HDPE
MH401
RIM: 28.94
INV. 26.88' (SE-OUT)
INV 26.92
"NO PARKING FIRE LANE" SIGN AT
100' MAX. INTERVAL (TYPICAL, SEE
DETAIL SHEET C7.1)
15" RCP - 16.80 LF @ 0.50%
4X6X12" RIPRAP ON 4" STONE & FILTER FABRIC.
FES 400
RIM: 28.32'
INV. 26.80' (NW)
TEMPORARY PVC SKIMMER.
3" FILTER WITH 1" ORIFICE.
PRO FH
W/ 6" GV & BOX
8x6 Tee
8" VAN 300 FIRE MAIN
4" WM 300 FDC EXTENSION
8" FDC WITH WAFER CHECK
PIV WITH TAMPER SWITCH ON 8" FIRE MAIN, 8X8 TEE
"NO PARKING FIRE LANE" SIGN AT
100' MAX. INTERVAL (TYPICAL, SEE
DETAIL SHEET C7.1)
SCM - CONSTRUCTED WETLAND
FES 200
RIM: 26.99
INV. 25.20' (E)
18" RCP - 27.58 LF @ 0.50%
FES 301
RISER 300
6x10x18" CLASS B
RIPRAP OVER FILTER
FABRIC.
18" PVC SCHEDULE 40 - 9.48 LF @ 1.00%
CB 27.92
INV (E) 23.42
INV (W) 23.47
BOT. 22.39
CB 27.99
INV (E) 23.
INV (W) 23.
BOT 22.56
30" CP
10" OAK
12" OAK
24" PINE
11" GUM
12" GUM
14" OAK
9" GUM
17" PINE
18" PINE
15" PINE
16" PINE
14" PINE
16" PINE
15" OAK
32" STUMP
8" OAK
14" PINE
10" TWIN OAK
13" PINE
4X6X12" RIPRAP ON 4" STONE & FILTER FABRIC.
16" PINE
21" PINE
6" OAK
3" OAK
4" OAK
2" OAK
5" OAK
10" OAK
6" OAK
3" OAK
6" OAK
5" OAK
10" OAK
6" OAK
3" OAK
6" OAK
CONCRETE WALK
CONCRETE WALK
CONCRETE WAL

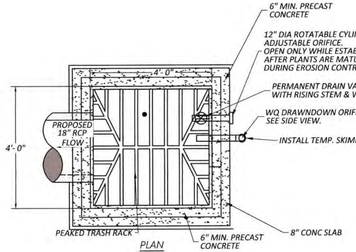

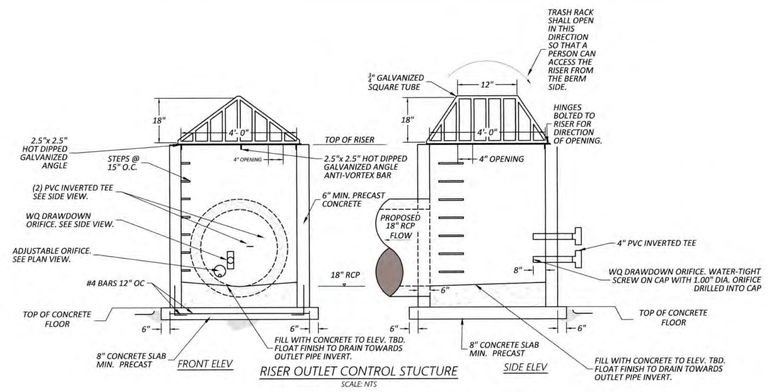

RISER OUTLET CONTROL STUCTURE

SCALE: NTS

OUTLET CONTROL STRUCTURE NOTES

1. STRUCTURE SHALL BE PRECAST CONCRETE
2. PRECASTER SHALL DESIGN AND FURNISH ALL STEEL REINFORCING, WALL THICKNESS AND HARDWARE.
3. MANUFACTURE ENTIRE CONCRETE AS ONE SECTION WITH NO JOINTS IF PRACTICAL.
4. ANY JOINTS SHALL BE WATER TIGHT AND BE CONSTRUCTED FOR ANTI-FLOTATION. THEY SHALL HAVE (4) GALVANIZED STEEL PLATES 12" X 12" X ¾", ONE PER SIDE. EACH PLATE SHALL HAVE (4) GALVANIZED STEEL BOLTS (¾" DIA X 8' L MIN), FOR ANTI-FLOTATION.
5. THROUGHOUT GRADING OPERATION, TEMPORARY SKIMMER SHALL BE IN PLACE AND DRAIN VALVE OPEN. INSTALL TEMPORARY PLUG IN DETENTION DRAWDOWN AND WQ DRAWDOWN.
6. AT END OF PROJECT, AFTER SITE IS STABLE, REMOVED TEMPORARY PLUGS AND SKIMMER AND CLOSE VALVE.



ADJUSTABLE ORIFICE

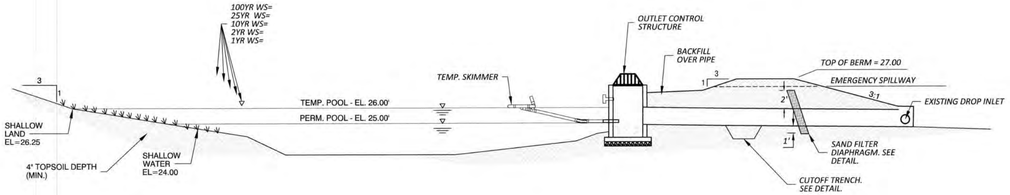

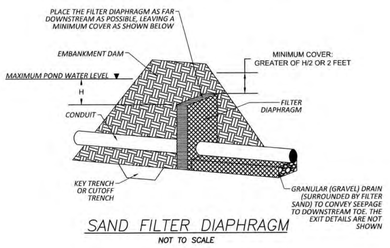

SAND FILTER DIAPHRAGM

NOT TO SCALE

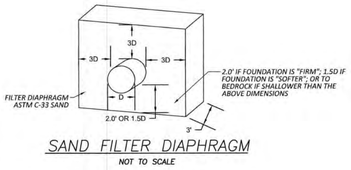

SAND FILTER DIAPHRAGM

NOT TO SCALE

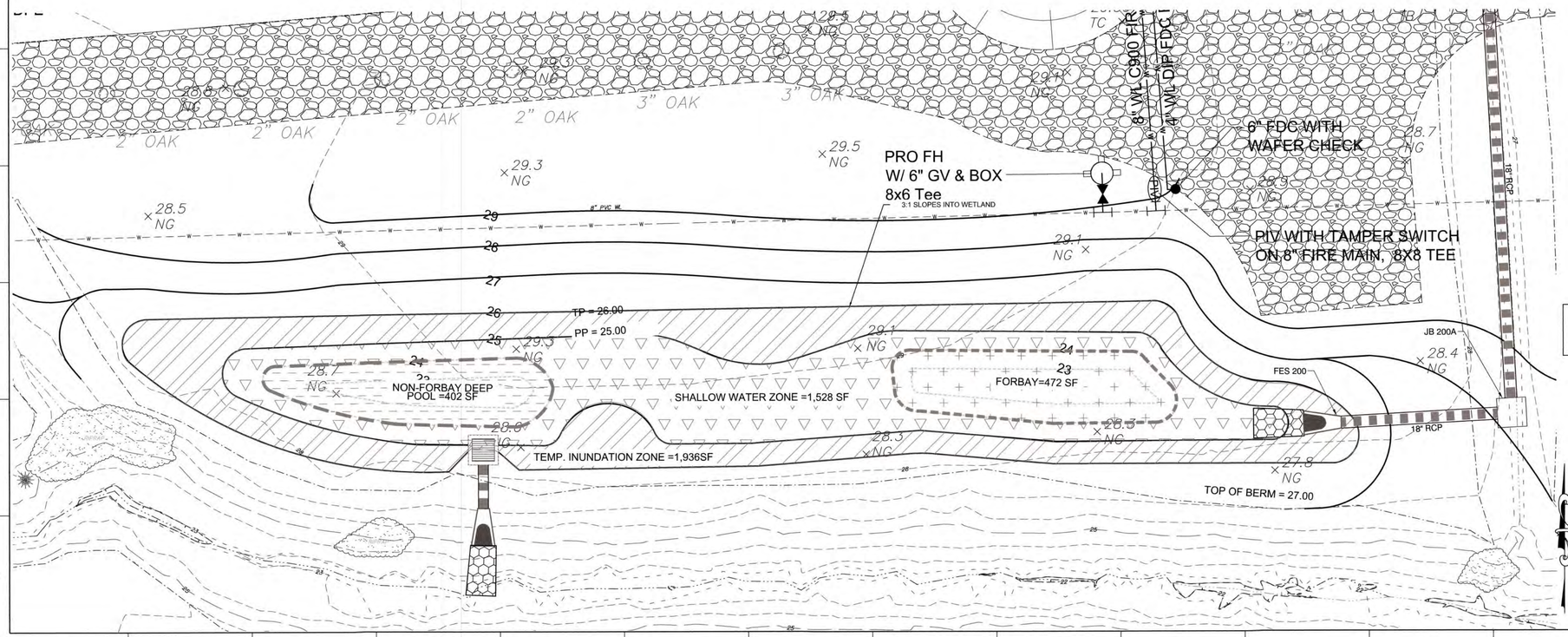

WETLANDS LEGEND

- SHALLOW LAND-TEMPORARY INUNDATION ZONE 0" TO 15" ABOVE PERMANENT POOL AREA = 1,936 SF = 44.6%
- SHALLOW WATER ZONE 0" TO 9" DEPTH BELOW PERMANENT POOL AREA = 1,528 SF = 35.2%
- FOREBAY DEEP POOL 24" TO 40" DEPTH AREA = 472 SF = 10.9%
- NON-FOREBAY DEEP POOL 18" MIN. DEPTH AREA = 402 SF = 9.3%

TOTAL WETLANDS AREA 4,338 SF

NOTES:

1. **MAXIMUM SHALLOW LAND DEPTH (TEMPORARY POOL) SHALL BE ONE (1.0) FOOT.**
2. **THE WETLAND MUST BE STABILIZED WITHIN 14 DAYS OF CONSTRUCTION.**
3. **CATTAILS ARE NOT TO BE PLANTED.**

ALL CONSTRUCTION SHALL COMPLY WITH ALL CITY, NCDOT, & NCDEQ STANDARDS AND SPECIFICATIONS

10' 0 5' 10'

SCALE 1 inch = **10** ft

811 CALL BEFORE YOU DIG! WWW.NC811.ORG N.C. ONE-CALL CENTER (IT'S THE LAW!)

GENERAL NOTES

RAI Project #2023139

Rivers & ASSOCIATES, INC. Since 1918
riversandassociates.com
NC License: F-0334
Six Forks Place III Ste. 230
353 E. Six Forks Road
Raleigh, NC 27609
919.594.1626
Engineers
Planners
Surveyors
Landscape Architects

SCO ID # 23-26923-01A

NO	REVISION	DATE

SEAL

NORTH CAROLINA PROFESSIONAL ENGINEER SEAL 22508 BRIAN P. RUFF

JKF ARCHITECTURE

625 LYNNDALE CT., SUITE F, GREENVILLE, NC 27858 252-355-1068

CRAVEN COMMUNITY COLLEGE
CORPORATE TRAINING CENTER
CITY OF NEW BERN - CRAVEN COUNTY - NC

DRAWING TITLE

STORMWATER CONTROL PLAN

SCALE: AS SHOWN	DRAWING NO: C3.1
DRAWN: MS, CS	
CHECKED: JSJ, BPR	
DATE: 9-1-2024	
PROJECT NO.: 2023139	

© COPYRIGHT, JKF ARCHITECTURE PC., JOHN K. FARKAS, AIA

P:\LANDDEV\JKF_ARCH-CCC_CORP_TRNG_CTR-2023139\CADD_DWG\SHEETS\C3.1 STORMWATER CONTROL PLAN.DWG - C3.1 STORMWATER CONTROL PLAN - 8/29/2024 4:58:53 PM

TEMP. RISER/SKIMMER BASIN #1 TO PERMANENT STORMWATER WETLAND CONVERSION SEQUENCE

1. PRIOR TO BEGINNING THE WETLAND CONVERSION, CONTRACTOR SHALL CONTACT THE EROSION CONTROL INSPECTOR AND THE CITY INSPECTOR TO REQUEST PERMISSION TO BEGIN THE CONVERSION.
2. PRIOR TO BEGINNING THE WETLAND CONVERSION, THE CONTRACTOR SHALL ENSURE THAT ALL DISTURBED SURFACES IN THE UPSTREAM DRAINAGE AREA TO THE WETLAND ARE PERMANENTLY STABILIZED WITH PERMANENT GROUND COVER (BUILDINGS, ASPHALT/CONCRETE, PARKING LOTS, SIDEWALKS, MULCH, LANDSCAPING, DITCH LINERS, AND A DENSE STAND OF GRASS.
3. THE SKIMMER BASIN SHALL BE DEWATERED USING A PUMP AND A SEDIMENT FILTER BAG ACCORDING TO NCDENR STANDARDS. DISCHARGE THE WATER INTO THE RISER OR DRAINAGE OUTLET.
4. THE CONTRACTOR SHALL MEET ONSITE WITH THE PROJECT GEOTECHNICAL ENGINEER. THE GEOTECHNICAL ENGINEER SHALL PROVIDE FIELD GUIDANCE AS NEEDED REGARDING POTENTIAL ADDITIONAL DEWATERING MEASURES AND WETLAND SLOPE STABILIZATION.
5. CONTRACTOR TO CONFIRM THAT THE PERMANENT RISER, ORIFICES, OUTLET PIPE, ANTI-SEEP COLLAR, AND CUTOFF TRENCH WERE ACCURATELY INSTALLED PER THE WETLAND PLAN/DETAILS SHEET, AND INSPECTED BY THE PROJECT GEOTECHNICAL ENGINEER AT THE TIME OF INITIAL BASIN CONSTRUCTION. SURVEY VERIFY AND MAKE ANY REPAIRS NEEDED.
6. REFER TO THE RISER DETAIL. REMOVE THE TEMPORARY SKIMMER. REMOVE THE TEMPORARY PLUGS IN THE WATER QUALITY DRAWDOWN ORIFICE AND THE DETENTION DRAWDOWN ORIFICE(S) AS SHOWN IN THE RISER DETAIL. ENSURE THAT THE TRASH RACK IS PROPERLY INSTALLED AND OPENS IN THE DIRECTION SHOWN TO ALLOW MAINTENANCE ACCESS FROM THE BERM. ENSURE THAT ALL INVERTED PVC SIPHONS ARE CORRECTLY INSTALLED WITH NO LEAKS, AT THE PROPER ELEVATIONS. ENSURE THAT THE RISER STEPS ARE INSTALLED.
7. MUCK OUT THE BASIN. ACCURATELY FINE GRADE THE ENTIRE WETLAND ACCORDING TO THE CONTOURS AND SPOT GRADES SHOWN ON THE WETLAND PLAN/DETAILS SHEET. THIS INCLUDES THE TOP OF BERM, EMBANKMENT, SLOPES, SPILLWAY, FOREBAY, NON-FOREBAY DEEP POOLS, SHALLOW WATER INUNDATION ZONES, SHALLOW LAND INUNDATION ZONES, CHANNELS, TOP OF SLOPES, AND TOE OF SLOPES. ALL GRADED SURFACES SHALL BE ACCURATELY GRADED TO WITHIN +/- 0.2 FEET OF VERTICAL TOLERANCE. THE CONTRACTOR SHALL RETAIN A SURVEYOR TO PERFORM CONSTRUCTION STAKEOUT AND ASBUILT SURVEY OF THE WETLAND. PAY SPECIAL ATTENTION TO THE ACCURATE GRADING OF THE TOP OF BERM WIDTH/ELEVATION, THE 4 CORNERS OF THE SPILLWAY AND SLOPES.
8. CONFIRM THAT ALL STORM PIPES, CONCRETE ENDWALLS, ETC. ARE INSTALLED PER PLANS. INSTALL/REFURBISH PERMANENT RIPRAP OVER FILTER FABRIC AT ALL STORM PIPE OUTLETS PER PLANS. REMOVE THE TEMPORARY IMPERMEABLE MEMBRANE LINER ON THE SPILLWAY.
9. AS SOON AS THE WETLAND IS ACCURATELY GRADED, THEN PROMPTLY HAVE AN ASBUILT SURVEY OF THE WETLAND PERFORMED. SURVEY RISER TOP ELEVATION, RISER ORIFICE ELEVATIONS/DIAMETERS, TOP OF BERM WIDTH/ELEVATION, 4 CORNERS OF THE EMERGENCY SPILLWAY ELEVATION, ALL SLOPES, PIPE INVERTS, FOREBAY, NON-FOREBAY DEEP POOLS, CHANNELS, SHALLOW WATER INUNDATION ZONES, SHALLOW LAND INUNDATION ZONES, BOTTOM AND TOP OF WALL ELEVATIONS, TOP AND TOE OF ALL SLOPES. SUBMIT ASBUILT CAD FILE WITH SURVEYED AUTOCAD POINTS TO THE CIVIL ENGINEER FOR REVIEW.
10. OBTAIN ENGINEER'S COMMENTS. PROMPTLY MAKE ANY ADJUSTMENTS/REPAIRS NEEDED. PERFORM ADDITIONAL ASBUILT SURVEY OF ANY ADJUSTED AREAS AND SUBMIT ASBUILT SURVEY CAD FILE WITH POINTS TO CIVIL ENGINEER.
11. AFTER THE ENGINEER HAS ACCEPTED THE WETLAND ASBUILT SURVEY GRADES, THEN PROMPTLY ESTABLISH PERMANENT GROUND COVER IN THE WETLAND. ESTABLISH A DENSE STAND OF GRASS ON THE TOP OF BERM, ALL BASIN SLOPES ABOVE THE PERMANENT POOL, SPILLWAY, AND EMBANKMENT SLOPES. GRASS MAY BE INSTALLED VIA SEEDING, HYDROSEEDING, OR SOD. INSTALL PERMANENT LINER IN SPILLWAY PER THE WETLAND DETAILS SHEET. ANY REMAINING DISTUBED OR EROSIVE AREAS SHALL BE PERMANENTLY STABILIZED WITH GRASS, SOD, AND/OR A SLOPE STABILIZATION BLANKET AS NEEDED. WATER GRASS & PLANTS ONLY AS NEEDED FOR PLANT HEALTH.
12. ALL WETLAND PLANTS SHALL BE INSTALLED BY A LANDSCAPE PROFESSIONAL. THE LANDSCAPE PROFESSIONAL SHALL SET THE WATER LEVEL OF THE WETLAND AS NEEDED TO ESTABLISH PLANT GROWTH USING THE ADJUSTABLE ORIFICE ON THE RISER. AFTER THE WETLAND PLANTS HAVE GROWN TO MATURITY, THEN THE ADJUSTABLE ORIFICE SHALL BE CAPPED SO THAT THE WETLAND WATER LEVEL RISES TO THE PERMANENT POOL ELEVATION.
13. SUBMIT GEOTECHNICAL NCPE CERTIFICATION OF BERM COMPACTION, OUTLET PIPE INSTALLATION, ANTI-SEEP COLLAR, AND CUTOFF TRENCH TO CIVIL ENGINEER.
14. AFTER WETLAND CONSTRUCTION IS COMPLETE AND STABILIZED, THEN CONTACT ENGINEER TO REQUEST ONSITE INSPECTION, PUNCHLIST, AND FINAL APPROVAL. THE CONTRACTOR SHALL NOT BE RELEASED UNTIL AFTER THE WETLAND IS P.E. CERTIFIED AND ACCEPTED BY THE MUNICIPALITY.

WETLAND NOTES

1. TOP OF BERM AND ALL SIDE SLOPES SHALL BE EITHER SODDED OR HYDROSEEDED TO ESTABLISH A DENSE STAND OF NON CLUMPING TURF GRASS
2. NO TREES SHRUBS OR WOODY VEGETATION IS ALLOWED ON THE TOP OF BERM OR SLOPES.
3. NO RIP RAP OR STONE IS ALLOWED IN THE BERM EMBANKMENT.
4. UNLESS DETERMINED OTHERWISE IN WRITING BY THE CONTRACTORS GEOTECHNICAL ENGINEER, THE CONTRACTOR SHALL INSTALL A CLAY LINER IN THE WETLAND UP TO ELEVATION 25.5'.
5. CONTRACTOR TO WATER PLANTINGS AND GRASS AS NEEDED.
6. CONTRACTOR SHALL NOT BE RELEASED UNTIL AFTER THE WETLAND HAS BEEN AS-BUILT SURVEYED, P.E. CERTIFIED AND ACCEPTED BY THE MUNICIPALITY.

BASIN DEWATERING DURING CONSTRUCTION:

THE CONTRACTOR SHALL ARRANGE FOR THE GEOTECHNICAL ENGINEER TO PROVIDE FIELD GUIDANCE ON WETLAND DEWATERING MEASURES DURING THE WETLAND GRADING OPERATION.

BENTONITE CLAY LINER:

1. **IN ORDER TO ENSURE THAT THE WETLAND CAN MAINTAIN A PERMANENT POOL OF WATER, THE CONTRACTOR SHALL INSTALL A BENTONITE CLAY LINER BELOW THE FINISHED GRADE OF ALL FOREBAYS AND SHALLOW WATER INUNDATION ZONES, INCLUDING THE ENTIRE PERMANENT POOL AREA OF THE WETLAND, EXTENDING UP TO ELEVATION 25.5' ALL THE WAY AROUND THE WETLAND.**
2. **THE CONTRACTOR SHALL PLACE A MINIMUM OF 4-INCHES OF SUITABLE LANDSCAPING TOPSOIL ON TOP OF THE LINER TO ACHIEVE THE DESIGN FINISHED GRADES SHOWN ON THE PLANS.**
3. **THE LINER SHALL BE RATED TO NOT EXCEED A MAXIMUM INFILTRATION RATE OF 0.01 IN/HR.**
4. **THE LINER SHALL BE INSTALLED PER THE MANUFACTURER'S SPECIFICATIONS AND INSTALLATION INSTRUCTIONS. CONTRACTOR TO SUBMIT PRODUCT CUT SHEET AND SPEC TO OWNER/ENGINEER.**

MAINTENANCE

INSPECTION ACTIVITIES - (FREQUENCY)

WHERE MAINTENANCE REQUIRES DEWATERING, DO SO BY MEANS OF DEWATERING PUMP.

AFTER CONSTRUCTION
INSPECT AFTER SEVERAL STORM EVENTS FOR BANK STABILITY, VEGETATION GROWTH, DRAINAGE SYSTEM FUNCTIONING, AND STRUCTURAL DAMAGE.

SEMI-ANNUAL INSPECTION
INSPECT FOR INVASIVE VEGETATION, DIFFERENTIAL SETTLEMENT, CRACKING; EROSION, LEAKAGE, OR TREE GROWTH ON THE EMBANKMENT; THE CONDITION OF THE RIPRAP IN THE INLET, OUTLET, AND PILOT CHANNELS; SEDIMENT ACCUMULATION IN THE BASIN; CLOGGING OF OUTLET; AND THE VIGOR AND DENSITY OF THE VEGETATION ON THE BASIN SIDE SLOPES AND FLOOR. CORRECT OBSERVED PROBLEMS AS NECESSARY.

NOTE SIGNS OF HYDROCARBON BUILDUP SUCH AS FLOATING OIL ON WATER SURFACE. - INSPECT FOR DAMAGE TO THE EMBANKMENT AND INLET/OUTLET STRUCTURES. REPAIR AS NECESSARY. MONITOR FOR SEDIMENT ACCUMULATION IN THE FACILITY AND FOREBAY. EXAMINE INLET AND OUTLET DEVICES TO ENSURE THEY ARE FREE OF DEBRIS AND ARE OPERATIONAL.

MAINTENANCE ACTIVITIES - (FREQUENCY)

ONE TIME
- REPLACE WETLAND VEGETATION TO MAINTAIN AT LEAST 50% OF SURFACE AREA COVERAGE IN WETLAND PLANTS AFTER THE SECOND GROWING SEASON.

AS NEEDED
- REPAIR UNDERCUT AREAS, EROSION TO BANKS, AND BOTTOM AS REQUIRED. WHERE PERMITTED BY THE DEPARTMENT OF FISH AND GAME OR OTHER AGENCY REGULATIONS, STOCK CONSTRUCTED WETLANDS REGULARLY WITH MOSQUITO FISH (GAMBUSIA SPP.) TO ENHANCE NATURAL MOSQUITO AND MIDGE CONTROL.

3 TO 4 TIMES PER YEAR
- CLEAN AND REMOVE DEBRIS FROM INLET AND OUTLET STRUCTURES.
- MOW SIDE SLOPES AND REMOVE GRASS CLIPPINGS. REMOVE LITTER AND DEBRIS FROM BANKS, BASIN BOTTOM, TRASH RACKS, OUTLET STRUCTURES, AND VALVES AS REQUIRED.

ANNUAL (IF NEEDED).
- -SUPPLEMENT WETLAND PLANTS IF A SIGNIFICANT PORTION HAVE NOT ESTABLISHED (AT LEAST 50% OF THE SURFACE AREA).
- -REMOVE NUISANCE PLANT SPECIES.
- -CLEAN FOREBAY TO AVOID ACCUMULATION IN MAIN WETLAND AREA TO MINIMIZE WHEN THE MAIN WET POND AREA NEEDS TO BE CLEANED.
- -HARVEST PLANT SPECIES IF VEGETATION BECOMES TOO THICK CAUSING FLOW BACKUP AND FLOODING. MORE FREQUENT PLANT HARVESTING MAY BE REQUIRED BY LOCAL VECTOR CONTROL AGENCIES.
- -FERTILIZE NEW VEGETATION ONE TIME ONLY. THE OWNER SHALL NOT FERTILIZE VEGETATION AFTER THE INITIAL OCCURRENCE.
- -MONITOR SEDIMENT ACCUMULATIONS, AND REMOVE SEDIMENT WHEN THE ACCUMULATED SEDIMENT VOLUME EXCEEDS 10-20% OF THE BASIN VOLUME, PLANTS ARE "CHOKED" WITH SEDIMENT, OR THE WETLAND BECOMES EUTROPHIC. IT IS SUGGESTED THAT THE MAIN AREA BE CLEANED ONE HALF AT A TIME WITH AT LEAST ONE GROWING SEASON IN BETWEEN CLEANINGS. THIS WILL HELP TO PRESERVE THE VEGETATION AND ENABLE THE WET POND TO RECOVER MORE QUICKLY FROM THE CLEANING.

PERMANENT SEEDING SPECIFICATIONS

SEEDING MIXTURE
SPECIES — RATE (LB/ACRES)
PREMIUM BERMUDA — 60

NURSE PLANTS
BETWEEN APR. 15 AND AUG. 15, ADD 10 LB/ACRE GERMAN MILLET OR 15 LB/ACRE SUDAN GRASS PRIOR TO MAY 1 OR AFTER AUG 15, ADD 25 LB/ACRE RYE (GRAIN)

SEEDING DATES

	BEST	POSSIBLE
EARLY SPRING:	FEB. 15-MAR. 20	FEB. 15-APR. 30
FALL:	SEPT. 1-SEPT. 30	SEPT. 1-OCT. 31

SOIL AMENDMENTS
APPLY LIME AND FERTILIZER ACCORDING TO SOIL TEST. IF SOIL TEST IS NOT AVAILABLE APPLY 2 TONS/ACRE AGRICULTURAL GRADE LIMESTONE AND 1,000LBS/ACRE OF 10-10-10 FERTILIZER, OR APPLY 3,000-5,000 LB/ACRE SUDANGRASS. PRIOR TO MAY 1 OR AFTER AUG. 15, ADD 25 LB/ACRE RYE (GRASS)

MULCH
APPLY 4,000 LB/ACRE GRAIN STRAW OR EQUIVALENT COVER OF ANOTHER SUITABLE MULCH. ANCHOR STRAW BY TACKING WITH ASPHALT, NETTING, OR ROVING OR BY CRIMPING WITH A MULCH ANCHORING TOOL. A DICK WITH BLADES SET NEARLY STRAIGHT CAN BE USED AS A MULCH ANCHORING TOOL.

MAINTENANCE
IF GROWTH IS LESS THAN FULL ADEQUATE, REFERTILIZE THE SECOND YEAR. ACCORDING TO SOIL TESTS OR TOPDRESS WITH 500 LB/ACRE 10-10-10 FERTILIZER. MOW AS NEEDED. RESEED, FERTILIZE AND MULCH DAMAGED AREAS IMMEDIATELY.

WETLAND PLANTING SCHEDULE:

1. ALL HERBACEOUS PLANTS WITHIN THE WETLAND PROPER (SHALLOW WATER AND SHALLOW LAND ZONES) SHALL BE INSTALLED BETWEEN MARCH 15 AND JULY 31.
2. UNLESS OTHERWISE DESIGNATED, PLANTS SHOULD BE INSTALLED AS LARGE DRIFTS (I.E., MASSES OF A SINGLE SPECIES) WITHIN THEIR RESPECTIVE PLANTING AREAS.
3. INSTALL A SLOW RELEASE FERTILIZER TABLET NEXT TO EACH PLANT WITHIN THE WETLAND PROPER. FOR HERBACEOUS SPECIES USE AG SAFE AQUATIC-TABS 20-10-5, 90 DAY CONTINUOUS FEEDING, 5 GRAMS, OR EQUIVALENT. FOR TREES AND SHRUBS USE AGRIFROM 20-10-5 PLUS MINORS PLANTING TABLETS, 2 YEAR SLOW RELEASE OR EQUIVALENT.
4. ALL PLANTS SHALL BE DIRECTLY DESCENDED FROM INDIVIDUALS GROWING WILD WITHIN 200 MILES OF THE PROJECT SITE. IF SUITABLE STOCK CANNOT BE OBTAINED, PLANTS OF OTHER GENETIC PROVENANCES MAY BE UTILIZED WITH THE APPROVAL OF THE OWNER OR OWNER'S REPRESENTATIVE.
5. PLANT MATERIAL SHOULD CONFORM TO AMERICAN STANDARD NURSERY STOCK, PUBLISHED BY THE AMERICAN ASSOCIATION OF NURSERYMEN. (SEE PLANT LIST AND NOTES 6, 7, 8A, 8B & 8C)
6. ALL PLANT MATERIAL TO BE CONTAINER GROWN PLANTS OF AT LEAST 4.0 CUBIC INCHES CAPACITY.
7. A MINIMUM OF TEN (10) DIFFERENT SPECIES, TOTAL OF WHICH FIVE (5) ARE EMERGENT SPECIES WITH NO MORE THAN 30% OF A SINGLE SPECIES.

8A. PLANTS FOR PERMANENT SHALLOW WATER (3"-6" DEEP).
PLANTS SHOULD BE OF EACH SPECIES AND PLANTED IN A NATURAL FLOWING ARRANGEMENT PER PLANTING PLAN.
- A.IRIS VIRGINICA (BLUE FLAG IRIS)
- B.PONTEDERIA CORDATA (PICKERELWEED)
- C.SAGITTARIA LATIFOLIA (DUCK POTATO)
- D.SAURURUS CERNUUS (LIZARD'S TAIL)

SHALLOW WATER SURFACE AREA: 2,403 SF
TOTAL NUMBER OF PLANTS SPACED AT 24" O.C: 401 (SEE PLANT SCHEDULE)

8B. PLANTS FOR SHALLOW LAND < 3' DEEP TO TEMPORARY POOL ELEVATION.
PLANTS SHOULD BE OF EACH SPECIES AND PLANTED IN A NATURAL FLOWING ARRANGEMENT PER PLANTING PLAN.
- A. ASCLEPIAS INCARNATA (SWAMP MILKWEED)
- B. EUTROCHIUM DUBIUM (COASTAL PLAIN JOE PYE WEED)
- C. MUHLENBERGIA CAPILLARIS (PINK MUHLY GRASS)
- D. PANICUM VIRGATUM (SWITCHGRASS)
- E. SOLIDAGO RUGOSA (GOLDENROD)

SHALLOW LAND SURFACE AREA: 1,729 SF
TOTAL NUMBER OF PLANTS SPACED AT 24" O.C.: 512 (SEE PLANT SCHEDULE)

8C. PLANTS FOR DEEP POOL 18" - 36".
- A. NYMPHAEA ODORATA (FRAGRANT WATER LILY)

DEEP POOL SURFACE AREA: 402 SF
TOTAL NUMBER OF PLANTS SPACED AT 24" O.C.: 105 (SEE PLANT SCHEDULE)

NOTE:

PLACE MIN. 4 INCHES OF QUALITY TOPSOIL TO THE SHALLOW LAND AND SHALLOW WATER REGIONS.

THE PROJECT CAN UTILIZE THE EXISTING TOPSOIL BY STOCK PILING ON SITE AND AMENDING SOIL AS NECESSARY BASED ON SOIL ANALYSIS RESULTS PER SECTION 6.5.1 OF THE BMP MANUAL.

NOTE:

1) ALL ROOF DRAINS SHALL BE DIRECTED TO THE STORM DRAIN SYSTEM.

AS-BUILT SURVEY:

UPON COMPLETION, CONTRACTOR TO SUBMIT NCRLS SEALED ASBUILT SURVEY OF WETLAND, INCLUDING AUTOCAD POINTS TO OWNER/ENGINEER, INCLUDING BERM, SPILLWAY, SLOPES, MAIN POOL, FOREBAY, PIPES, INVERTS, RISER, RISER TOP ELEV, ORIFICE INVERTS, VEGETATIVE SHELF, ORIFICE DIAMETERS, ETC. TO OWNER/ENGINEER. ALL FEATURES SHALL BE WITHIN +/- 0.2 FT VERTICAL TOLERANCE OF THE DESIGN

GEOTECHNICAL CERTIFICATION:

THE OWNER SHALL RETAIN A LICENSED NCPE GEOTECHNICAL ENGINEER TO OBSERVE WETLAND BERM GRADING, CUT OFF TRENCH, FILTER DIAPHRAM, OUTLET PIPE INSTALLATION AND BERM COMPACTION. UPON COMPLETION, SUBMIT A SIGNED PE SEALED GEOTECH CERTIFICATION STATEMENT TO THE OWNER/ENGINEER.

811 CALL BEFORE YOU DIG!
WWW.NC811.ORG
N.C. ONE-CALL CENTER
IT'S THE LAW!

GENERAL NOTES

RAI Project #2023139

NC License: F-0334
Rivers & ASSOCIATES, INC. Since 1918
riversandassociates.com
Six Forks Place III Ste. 230
353 E. Six Forks Road
Raleigh, NC 27609
919.594.1626
Engineers
Planners
Surveyors
Landscape Architects

SCO ID # 23-26923-01A

NO	REVISION	DATE

SEAL — NORTH CAROLINA PROFESSIONAL ENGINEER 25058 BRIAN P. KUE

JKF ARCHITECTURE
625 LYNNDALE CT., SUITE F, GREENVILLE, NC 27858 252-355-1068

CRAVEN COMMUNITY COLLEGE
CORPORATE TRAINING CENTER
CITY OF NEW BERN - CRAVEN COUNTY - NC

DRAWING TITLE
STORMWATER CONTROL NOTES

SCALE: AS SHOWN	DRAWING NO: C3.2
DRAWN: MS, CS	
CHECKED: JSJ, BPR	
DATE: 9-1-2024	
PROJECT NO.: 2023139	

© COPYRIGHT. JKF ARCHITECTURE PC. JOHN K. FARKAS, AIA

R:\LANDDEV\JKF_ARCH-CCC_CORP_TRNG_CTR-2023139\CAD\TI_DWG\SHEETS\C3.2 STORMWATER CONTROL NOTES.DWG - C3.2 STORMWATER CONTROL NOTES - 9/13/2024 9:50:36 AM



GENERAL NOTES

EROSION CONTROL SEQUENCE - STAGE 1

1. PRIOR TO BEGINNING ANY CONSTRUCTION, THE CONTRACTOR SHALL OBTAIN AND READ ALL PERMITS/APPROVALS NECESSARY TO COMPLETE THE CONSTRUCTION, INCLUDING BUT NOT LIMITED TO SITE PLAN APPROVAL, LAND DISTURBANCE PERMIT, NPDES PERMIT, CONSTRUCTION DRAWINGS APPROVAL, NCDOT DRIVEWAY PERMIT, NCDOT ENCROACHMENT AGREEMENTS, WATER PERMIT, SEWER PERMIT, ETC. CONTRACTOR TO RETAIN COPIES OF ALL PERMIT DOCUMENTS AND APPROVED PLANS ON THE JOBSITE THROUGHOUT CONSTRUCTION. READ AND COMPLY WITH ALL CONDITIONS OF ALL PERMITS. PERMIT DOCUMENTS SHALL BE CONSIDERED A PART OF THESE CONSTRUCTION DRAWINGS.
2. As of April 1, 2019, all new construction activities not explicitly exempt are required to complete and submit an electronic Notice of Intent (eNOI) form requesting a Certificate of Coverage (COC) under the NCG010000 Construction General Permit. After the form is reviewed and found to be complete, you will receive a link with payment instructions for the annual permit fee. After the fee is processed, you will receive the COC. As the Financial Responsible Party shown on the FRO form submitted for this project, you MUST obtain the COC prior to commencement of any land disturbing activity. The eNOI form may be accessed at deq.nc.gov/NCG01.
3. PRIOR TO BEGINNING ANY CONSTRUCTION, CONTRACTOR TO HOLD ONSITE PRECONSTRUCTION CONFERENCE WITH EROSION CONTROL INSPECTOR, CITY/TOWN/COUNTY INSPECTORS, NCDOT INSPECTOR AND OWNER/DEVELOPER AS REQUIRED.
4. INSTALL TEMPORARY SILT FENCE, AND HAVE IT INSPECTED BY THE CITY/TOWN INSPECTOR IF REQUIRED.
5. INSTALL TEMPORARY GRAVEL CONSTRUCTION ENTRANCE/EXIT AND TEMPORARY OR PERMANENT DRIVEWAY PIPE SO THE PROJECT SITE CAN BE ACCESSED FOR CONSTRUCTION.
6. CLEAR ONLY THE MINIMUM NEEDED TO INSTALL THE STAGE 1 EROSION CONTROL MEASURES. INSTALL ALL EROSION CONTROL MEASURES SHOWN ON THE STAGE 1 EROSION CONTROL PLAN INCLUDING TEMPORARY SILT FENCE, STONE OUTLETS, TREE PROTECTION FENCE, DIVERSION BERMS/DITCHES, SKIMMER BASINS, ETC. PROMPTLY INSTALL DITCH LINERS, SPILLWAY LINER, AND SEED BASIN BERM, BASIN SLOPES, AND ALL DITCHES.
7. THE SKIMMER BASIN BERM SHALL BE ACCURATELY GRADED TO FUNCTION FOR THE PERMANENT WET DETENTION POND, INCLUDING THE CUTOFF TRENCH AND ANTI-SEEP COLLAR. THE RISER AND O-RING GASKETTED RCP OUTLET PIPE SHALL BE ACCURATELY CONSTRUCTED AS PERMANENT STRUCTURES. REFER TO THE SCM PLAN/DETAILS SHEET FOR ADDITIONAL INFORMATION. THE PROJECT GEOTECHNICAL ENGINEER SHALL OVERSEE THE CONSTRUCTION OF THESE FEATURES AT THE TIME OF INITIAL SKIMMER BASIN CONSTRUCTION.
8. INSTALL TEMPORARY PORTABLE PUMP GENERATOR ON TOP OF BERM. CONNECT INTAKE HOSE TO SKIMMER AND RUN DISCHARGE HOSE TO BASIN OUTLET. WATER IS TO BE DISCHARGED THROUGH STANDARD SILT BAG. SILT BAG WILL BE MONITORED BY CONTRACTOR CONTINUOUSLY WHILE IN USE.
9. CONTACT EROSION CONTROL INSPECTOR TO REQUEST ONSITE INSPECTION OF STAGE 1 EROSION CONTROL MEASURES AND OBTAIN APPROVAL.
10. IT IS THE CONTRACTOR'S RESPONSIBILITY TO INSPECT ALL EROSION CONTROL MEASURES AFTER EACH RAINFALL EVENT, AND MAKE IMMEDIATE REPAIRS AS NEEDED. ALL SEDIMENT SHALL BE RETAINED ON THE JOBSITE THROUGHOUT CONSTRUCTION. ALL ADJACENT STREETS AND SIDEWALKS SHALL BE KEPT BROOM CLEAN.
11. REFER TO THE NPDES PERMIT, WHICH REQUIRES THE CONTRACTOR TO PERFORM SELF-INSPECTIONS, KEEP AN ONSITE RAIN GAUGE, AND KEEP ONSITE INSPECTION RECORDS.
12. PROCEED TO THE STAGE 2 EROSION CONTROL SEQUENCE.

EROSION CONTROL LEGEND

EXISTING CONTOURS
PROPOSED CONTOURS
LIMITS OF DISTURBANCE — LOD
TREE PROTECTION FENCE — TP
SILT FENCE — SF
SUPER SILT FENCE
COMBO TREE PRO/SILT FENCE — SF-TP
SILT FENCE OUTLET
DIVERSION DITCH — TD
CLEAN WATER DITCH — CWD
POROUS BAFFLE
STORM DRAINAGE PIPE
RIP-RAP ENERGY DISSIPATORS
CONSTRUCTION ENTRANCE
ROLLED EROSION CONTROL
TEMP. INLET PROTECTION
TEMPORARY STOCKPILE
TEMPORARY WATTLE
CONCRETE WASHOUT

RAI Project #2023139

Rivers & ASSOCIATES, INC.
riversandassociates.com Since 1918
NC License: F-0334
Six Forks Place III Ste. 230
353 E. Six Forks Road
Raleigh, NC 27609
919.594.1626
Engineers
Planners
Surveyors
Landscape Architects

SCO ID # 23-26923-01A

NO	REVISION	DATE

SEAL
NORTH CAROLINA PROFESSIONAL ENGINEER SEAL 22505 BRIAN P. RUHE

JKF ARCHITECTURE
625 LYNNDALE CT, SUITE F, GREENVILLE NC 27858 252-355-1048

CRAVEN COMMUNITY COLLEGE
CORPORATE TRAINING CENTER
CITY OF NEW BERN - CRAVEN COUNTY - NC

DRAWING TITLE
SEDIMENTATION & EROSION CONTROL PLAN - STAGE 1

SCALE	AS SHOWN
DRAWN	MS, CS
CHECKED	JSJ, BPR
DATE	9-1-2024
PROJECT NO.	2023139
DRAWING NO	C4.1

© COPYRIGHT, JKF ARCHITECTURE PC, JOHN K. FARKAS, AIA

R:\LANDDEV\JKF_ARCH\CCCC_CORP_TRNG_CTR-2023139\CADD_DWG\SHEETS\C4.1 EC PLAN-STAGE 1_C5.1_C5.2.DWG - C4.1 SEDIMENTATION & EROSION CONTROL PLAN - STAGE 1 - 9/16/2024 12:24:42 PM

BATE HALL

KELSO HALL

CAMPUS BOOK STORE

TEMPORARY STOCKPILE & STAGING AREA

TEMPORARY LAYDOWN YARD

TEMPORARY LAYDOWN YARD

REPACE EX. TO NEW MH

FFE 30.80

FFE 30.80

FFE 29.86

FFE 29.85

SILT FENCE/ TREE PROTECTION FENCE (TYP) SEE DETAIL

DO NOT DAMAGE EXISTING STATUE

DO NOT DAMAGE EXISTING STATUE

DO NOT DAMAGE EXISTING STATUE

INLET PROTECTION FENCE (TYP)

2" TYPE "K" WATER SERVICE
8x2 TAPPING SADDLE
2" GATE VALVE
2" BACK FLOW PREVENTER
INSIDE BUILDING (SEE PLUMBING PLANS)

15" HDPE

CONCRETE WASHOUT

PRO FH
W/ 6" GV & BOX
8x6 Tee

6" FDC WITH WAFER CHECK

PIV WITH TAMPER SWITCH ON 8" FIRE MAIN, 8X8 TEE

8" WM CBD FIRE MAIN

8" WM CBD FIRE MAIN EXTENSION

4X6X12" th. CLASS 'A' RIPRAP ON 4" FILTER STONE & FABRIC

4X6X12" th. CLASS 'A' RIPRAP ON 4" FILTER STONE & FABRIC

TEMPORARY PVC SKIMMER. 2" FILTER WITH 1" ORIFICE.

6x10x18" CLASS 'B' RIPRAP ON 4" FILTER STONE & FABRIC.

TEMPORARY BAFFLES (TYP) 2" PVC 56" ABOVE GROUND

SILT FENCE (TYP) SEE DETAIL

CON. BOX W MH RING 103

DOG HOUSE MH#2

SSMH #1

EX-MH3

TBM BOLT ON LP
BASE (#7) EL. 30.58
(NAVD88)

DISTURBED AREA = 1.60 AC

EROSION CONTROL LEGEND

- EXISTING CONTOURS
- PROPOSED CONTOURS
- LIMITS OF DISTURBANCE (LOD)
- TREE PROTECTION FENCE (TP)
- SILT FENCE (SF)
- SUPER SILT FENCE (SSF)
- COMBO TREE PRO/SILT FENCE (SF-TP)
- SILT FENCE OUTLET
- DIVERSION DITCH (TD)
- CLEAN WATER DITCH (CWD)
- POROUS BAFFLE
- STORM DRAINAGE PIPE
- RIP-RAP ENERGY DISSIPATORS
- CONSTRUCTION ENTRANCE
- ROLLED EROSION CONTROL
- TEMP. INLET PROTECTION
- TEMPORARY STOCKPILE
- TEMPORARY WATTLE
- CONCRETE WASHOUT

NCGRID NAD83/2011

20' 0 10' 20'

SCALE 1 inch = 20 ft

GENERAL NOTES

EROSION CONTROL SEQUENCE - STAGE 2

1. DO NOT BEGIN STAGE 2 UNTIL ALL STAGE 1 MEASURES ARE IN PLACE. CONTRACTOR TO INSPECT AND REFURBISH ALL STAGE 1 EROSION CONTROL MEASURES AS NEEDED.
2. IT IS THE CONTRACTOR'S RESPONSIBILITY TO INSPECT ALL EROSION CONTROL MEASURES AFTER EACH RAINFALL EVENT, AND MAKE IMMEDIATE REPAIRS AS NEEDED. ALL SEDIMENT SHALL BE RETAINED ON THE JOBSITE THROUGHOUT CONSTRUCTION. ALL ADJACENT STREETS AND SIDEWALKS SHALL BE KEPT BROOM CLEAN.
3. REFER TO THE NPDES PERMIT, WHICH REQUIRES THE CONTRACTOR TO PERFORM SELF-INSPECTIONS, KEEP AN ONSITE RAIN GAUGE, AND KEEP ONSITE INSPECTION RECORDS.
4. PERFORM DEMOLITION, THEN CLEAR AND GRUB THE SITE UP TO THE DISTURBANCE LIMITS SHOWN ON THE PLAN.
5. BEGIN SITE GRADING. PROVIDE TEMPORARY SEEDING IN ACCORDANCE WITH THE STABILIZATION TIME FRAMES SHOWN ON THE NPDES DETAILS.
6. INSTALL STORM PIPE SYSTEM AND TEMPORARY INLET PROTECTION. GRADE ALL PERMANENT SWALES/DITCHES, AND INSTALL DITCH LINERS. INSTALL PROPOSED UTILITIES.
7. ALL GRADING, COMPACTION, POND/BERM CONSTRUCTION, BUILDING PADS AND PROOFROLL SHALL BE OBSERVED BY THE PROJECT GEOTECHNICAL ENGINEER. SUBMIT GEOTECHNICAL CERTIFICATION OF POND BERM CONSTRUCTION TO OWNER/CIVIL ENGINEER.
8. AFTER GRADING IS COMPLETE, THEN ESTABLISH PERMANENT GROUND COVER ON ALL DISTURBED AREAS, INCLUDING PAVING, LANDSCAPING,MULCH, AND ESTABLISH A DENSE STAND OF GRASS. ANY BARE SPOTS, EROSIVE RILLS OR EROSIVE SLOPES SHALL BE PERMANENTLY STABILIZED WITH AN EROSION CONTROL BLANKET AND GRASS (SEED, HYDROSEED OR SOD AS NEEDED). THE CONTRACTOR SHALL WATER ALL VEGETATION AS NEEDED FOR HEALTHY PLANTS AND GRASS UNTIL CONSTRUCTION IS COMPLETE AND APPROVED BY MUNICIPALITIES.
9. AFTER ALL AREAS ARE STABILIZED AND A DENSE STAND OF GRASS IS ESTABLISHED, THEN CONTACT EROSION CONTROL INSPECTOR FOR ONSITE INSPECTION. OBTAIN APPROVAL AND REQUEST PERMISSION TO CONVERT THE TEMPORARY SKIMMER BASIN INTO A PERMANENT WET DETENTION POND.
10. INSTALL TEMPORARY PORTABLE PUMP GENERATOR ON TOP OF BERM. CONNECT INTAKE HOSE TO TEMPORARY SKIMMER AND RUN DISCHARGE HOSE TO RIPRAP OUTLET. WATER IS TO BE DISCHARGED THROUGH STANDARD SILT BAG. SILT BAG WILL BE MONITORED CONTINUOUSLY WHILE AND USE AND SILT BAG WASTE IS TO BE DISPOSED OF REGULARLY IN AN APPROVED LOCATION.
11. FOLLOWING APPROVAL, THEN REMOVE ALL REMAINING TEMPORARY EROSION CONTROL MEASURES (SILT FENCE, INLET PROTECTION, TEMPORARY DIVERSION DITCHES ETC.). REFER TO POND DETAIL SHEET.
12. Closeout your Certificate of Coverage (COC) which was obtained at the beginning. See the Stage-1 notes at the start of grading, for the note about the eNOI (electronic Notice of Intent) and your COC. As the Financially Responsible Party shown on the FRO form submitted for this project, you then "Close-out" the COC after completion of your land disturbing activity. (The eNOI form may be accessed at deq.nc.gov/NCG01.)

RAI Project #2023139

Rivers & ASSOCIATES, INC. Since 1918
NC License: F-0334
riversandassociates.com
Six Forks Place III Ste. 230
353 E. Six Forks Road
Raleigh, NC 27609
919.594.1626
Engineers
Planners
Surveyors
Landscape Architects

SCO ID # 23-26923-01A

NO	REVISION	DATE

SEAL: NORTH CAROLINA PROFESSIONAL 22508 ENGINEER JOHN P. RUFF

JKF ARCHITECTURE
625 LYNNDALE CT., SUITE F, GREENVILLE, NC 27858 252-355-1068

CRAVEN COMMUNITY COLLEGE
CORPORATE TRAINING CENTER
CITY OF NEW BERN - CRAVEN COUNTY - NC

DRAWING TITLE: SEDIMENTATION & EROSION CONTROL PLAN - STAGE 2

SCALE	AS SHOWN
DRAWN	MS, CS
CHECKED	JSJ, BPR
DATE	9-1-2024
PROJECT NO.	2023139
DRAWING NO	C4.2

© COPYRIGHT, JKF ARCHITECTURE PC., JOHN K. FARKAS, AIA

R:\LANDDEV\JKF_ARCH-CCC_CORP_TRNG_CTR-2023139\CADD_DWG\SHEETS\C4.2 EROSION CONTROL PLAN-STAGE 2.DWG - C4.2 SEDIMENTATION & EROSION CONTROL PLAN - STAGE 2 - 9/19/2024 11:25:06 AM

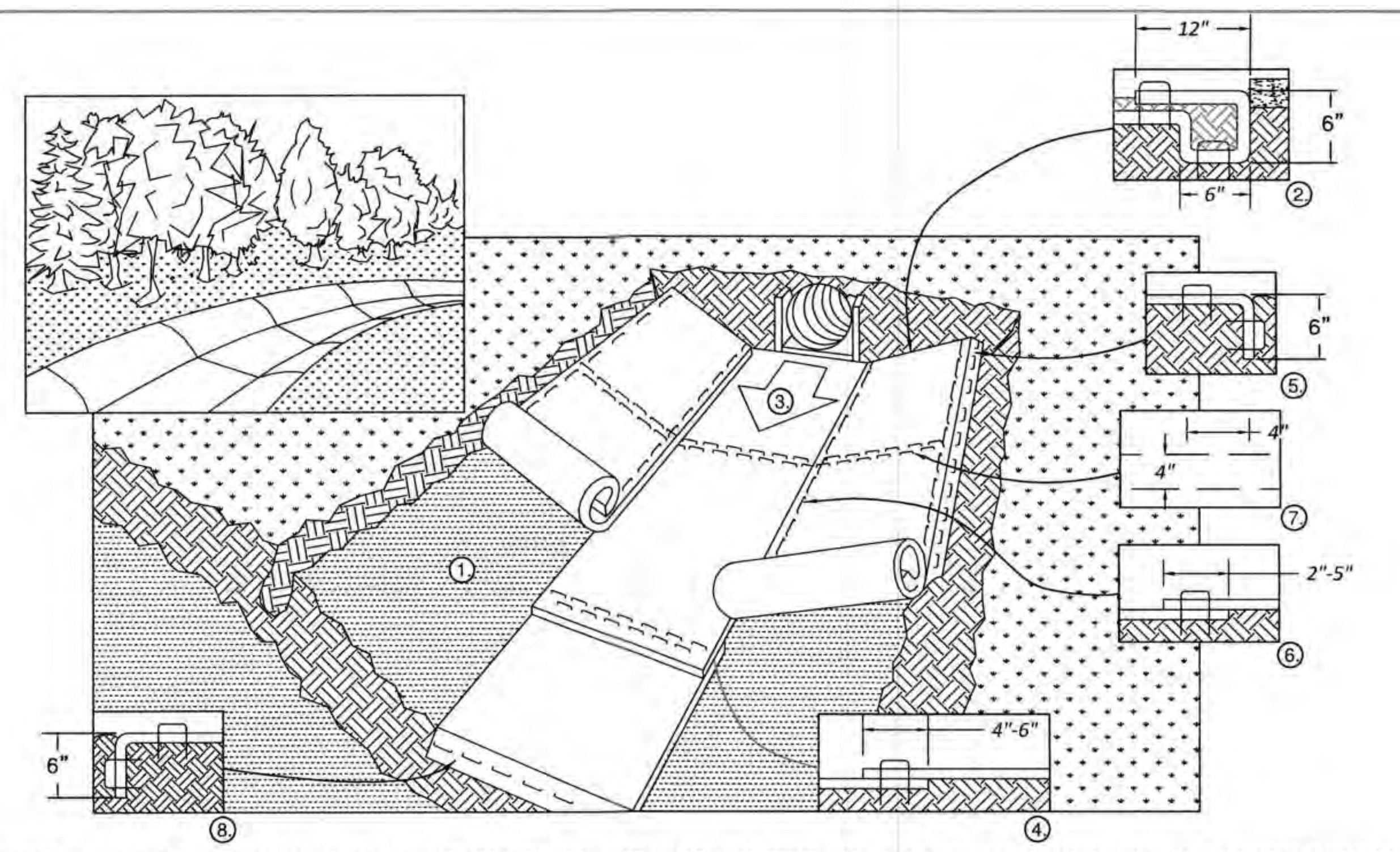

1. PREPARE SOIL BEFORE INSTALLING BLANKETS, INCLUDING ANY NECESSARY APPLICATION OF LIME, FERTILIZER, AND SEED. NOTE: WHEN USING CELL-O-SEED DO NOT SEED PREPARED AREA. CELL-O-SEED MUST BE INSTALLED WITH PAPER SIDE DOWN.
2. BEGIN AT THE TOP OF THE CHANNEL BY ANCHORING THE BLANKET IN A 6" (15 CM) DEEP X 6" (15 CM) WIDE TRENCH WITH APPROXIMATELY 12" (30 CM) OF BLANKET EXTENDED BEYOND THE UP-SLOPE PORTION OF THE TRENCH. ANCHOR THE BLANKET WITH A ROW OF STAPLES/STAKES APPROXIMATELY 12" (30 CM) APART IN THE BOTTOM OF THE TRENCH. BACKFILL AND COMAPCT THE TRENCH AFTER STAPLING. APPLY SEED TO COMPACTED SOIL AND FOLD REMAINING 12" (30 CM) PORTION OF BLANKET BACK OVER SEED AND COMPACTED SOIL. SECURE BLANKET OVER COMPACTED SOIL WITH A ROW OF STAPLES/STAKES SPACED APPROXIMATELY 12" (30 CM) ACROSS THE WIDTH OF THE BLANKET.
3. ROLL CENTER BLANKET IN DIRECTION OF WATER FLOW IN BOTTOM OF CHANNEL. BLANKETS WILL UNROLL WITH APPROPRIATE SIDE AGAINST THE SOIL SURFACE. ALL BLANKETS MUST BE SECURELY FASTENED TO SOIL SURFACE BY PLACING STAPLES/STAKES IN APPROPRIATE LOCATIONS AS SHOWN IN THE STAPLE PATTERN GUIDE. WHEN USING THE DOT SYSTEM , STAPLES/STAKES SHOULD BE PLACED THROUGH EACH OF THE COLORED DOTS CORRESPONDING TO THE APPROPRIATE STAPLE PATTERN.
4. PLACE CONSECUTIVE BLANKETS END OVER END (SHINGLE STYLE) WITH A 4" - 6" (10 CM -15 CM) OVERLAP. USE A DOUBLE ROW OF STAPLES STAGGERED 4" (10 CM) APART AND 4" (10 CM) ON CENTER TO SECURE BLANKETS.
5. FULL LENGTH EDGE OF BLANKETS AT TOP OF SIDE SLOPES MUST BE ANCHORED WITH A ROW OF STAPLES/STAKES APPROXIMATELY 12" (30 CM) APART IN A 6" (15 CM) DEEP X 6" (15 CM) WIDE TRENCH. BACKFILL AND COMPACT THE TRENCH AFTER STAPLING.
6. ADJACENT BLANKETS MUST BE OVERLAPPED APPROXIMATELY 2" - 5" (5 CM -12.5 CM) (DEPENDING ON BLANKET TYPE) AND STAPLED.
7. IN HIGH FLOW CHANNEL APPLICATIONS, A STAPLE CHECK SLOT IS RECOMMENDED AT 30 TO 40 FOOT (9 M - 12 M) INTERVALS. USE A DOUBLE ROW OF STAPLES STAGGERED 4" (10 CM) APART AND 4" (10 CM) ON CENTER OVER ENTIRE WIDTH OF THE CHANNEL.
8. THE TERMINAL END OF THE BLANKETS MUST BE ANCHORED WITH A ROW OF STAPLES/STAKES APPROXIMATELY 12" (30 CM) APART IN A 6" (15 CM) DEEP X 6" (15 CM) WIDE TRENCH. BACKFILL AND COMPACT THE TRENCH AFTER STAPLING.

NOTE:
* IN LOOSE SOIL CONDITIONS, THE USE OF STAPLE OR STAKE LENGTHS GREATER THAN 6" (15 CM) MAY BE NECESSARY TO PROPERLY ANCHOR THE BLANKETS.

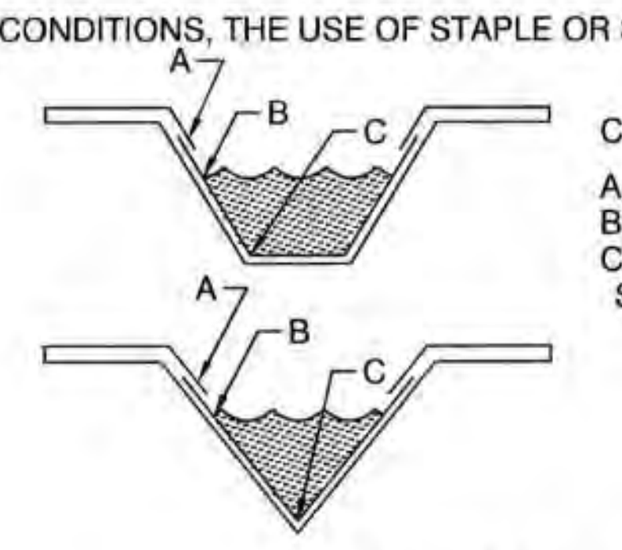

CRITICAL POINTS

A. OVERLAPS AND SEAMS
B. PROJECTED WATER LINE
C. CHANNEL BOTTOM/SIDE SLOPE VERTICES

NOTE:
* HORIZONTAL STAPLE SPACING SHOULD BE ALTERED IF NECESSARY TO ALLOW STAPLES TO SECURE THE CRITICAL POINTS ALONG THE CHANNEL SURFACE.

** IN LOOSE SOIL CONDITIONS, THE USE OF STAPLE OR STAKE LENGTHS GREATER THAN 6" (15 cm) MAY BE NECESSARY TO PROPERLY ANCHOR THE BLANKETS.

CHANNEL LINER INSTALLATION

N.T.S.

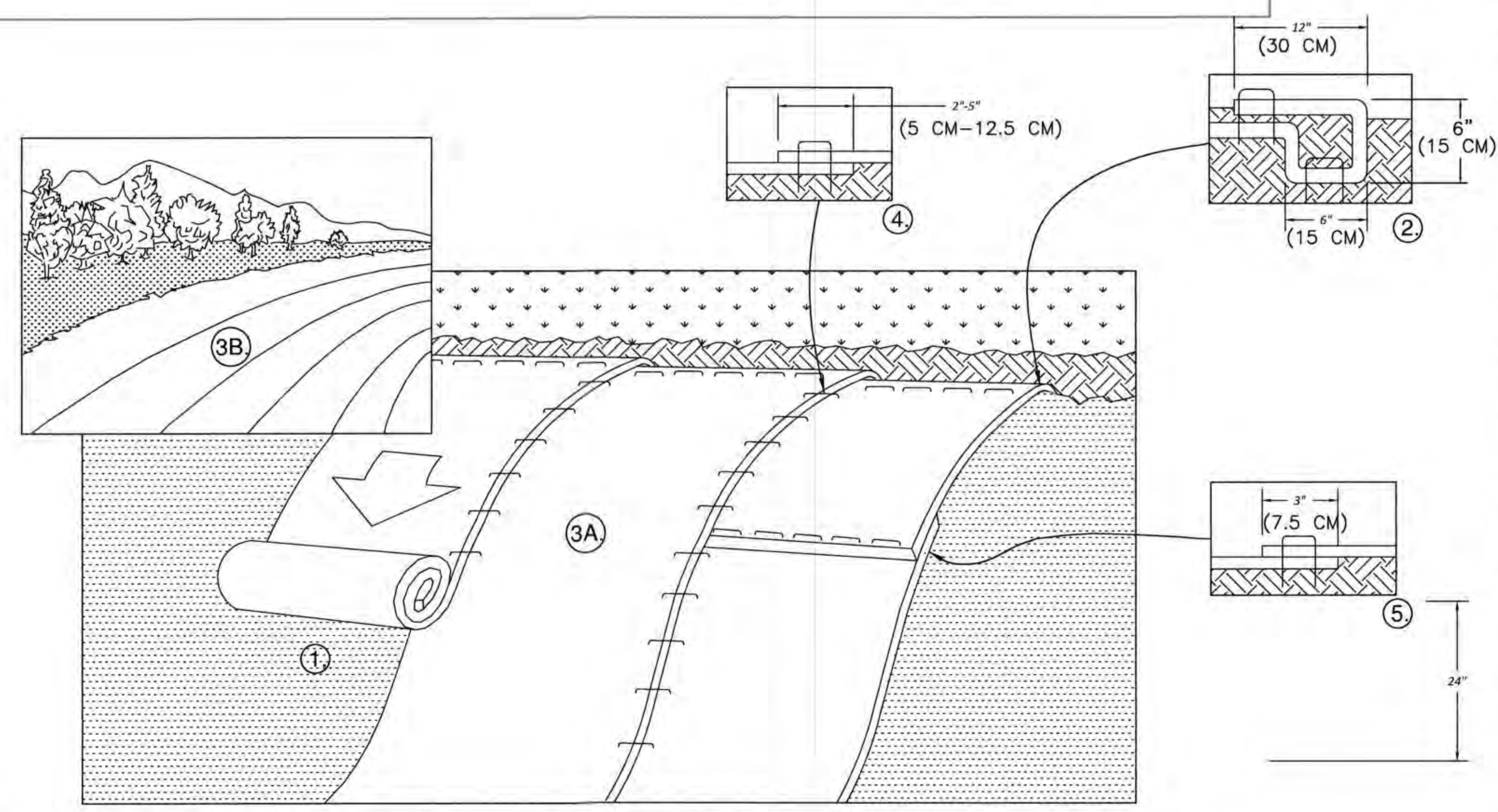

N.T.S.

1. PREPARE SOIL BEFORE INSTALLING BLANKETS, INCLUDING ANY NECESSARY APPLICATION OF LIME, FERTILIZER, AND SEED. NOTE: WHEN USING CELL-O-SEED DO NOT SEED PREPARED AREA. CELL-O-SEED MUST BE INSTALLED WITH PAPER SIDE DOWN.
2. BEGIN AT THE TOP OF THE SLOPE BY ANCHORING THE BLANKET IN A 6" (15 CM) DEEP X 6" (15 CM) WIDE TRENCH WITH APPROXIMATELY 12" (30cm) OF BLANKET EXTENDED BEYOND THE UP-SLOPE PORTION OF THE TRENCH. ANCHOR THE BLANKET WITH A ROW OF STAPLES/STAKES APPROXIMATELY 12" (30 CM) APART IN THE BOTTOM OF THE TRENCH. BACKFILL AND COMPACT THE TRENCH AFTER STAPLING. APPLY SEED TO COMPACTED SOIL AND FOLD REMAINING 12" (30 CM) PORTION OF BLANKET BACK OVER SEED AND COMPACTED SOIL. SECURE BLANKET OVER COMPACTED SOIL WITH A ROW OF STAPLES/STAKES SPACED APPROXIMATELY 12" (30 CM) APART ACROSS THE WIDTH OF THE BLANKET.
3. ROLL THE BLANKETS (A.) DOWN OR (B.) HORIZONTALLY ACROSS THE SLOPE. BLANKETS WILL UNROLL WITH APPROPRIATE SIDE AGAINST THE SOIL SURFACE. ALL BLANKETS MUST BE SECURELY FASTENED TO SOIL SURFACE BY PLACING STAPLES/STAKES IN APPROPRIATE LOCATIONS AS SHOWN IN THE STAPLE PATTERN GUIDE. WHEN USING THE DOT SYSTEM , STAPLES/STAKES SHOULD BE PLACED THROUGH EACH OF THE COLORED DOTS CORRESPONDING TO THE APPROPRIATE STAPLE PATTERN.
4. THE EDGES OF PARALLEL BLANKETS MUST BE STAPLED WITH APPROXIMATELY 2" - 5" (5 CM - 12.5 CM) OVERLAP DEPENDING ON BLANKET TYPE.
5. CONSECUTIVE BLANKETS SPLICED DOWN THE SLOPE MUST BE PLACED END OVER END (SHINGLE STYLE) WITH AN APPROXIMATE 3" (7.5 CM) OVERLAP. STAPLE THROUGH OVERLAPPED AREA, APPROXIMATELY 12" (30 CM) APART ACROSS ENTIRE BLANKET WIDTH.
NOTE:
*IN LOOSE SOIL CONDITIONS, THE USE OF STAPLE OR STAKE LENGTHS GREATER THAN 6" (15 CM) MAY BE NECESSARY TO PROPERLY SECURE THE BLANKETS.

SLOPE BLANKET INSTALLATION

N.T.S.

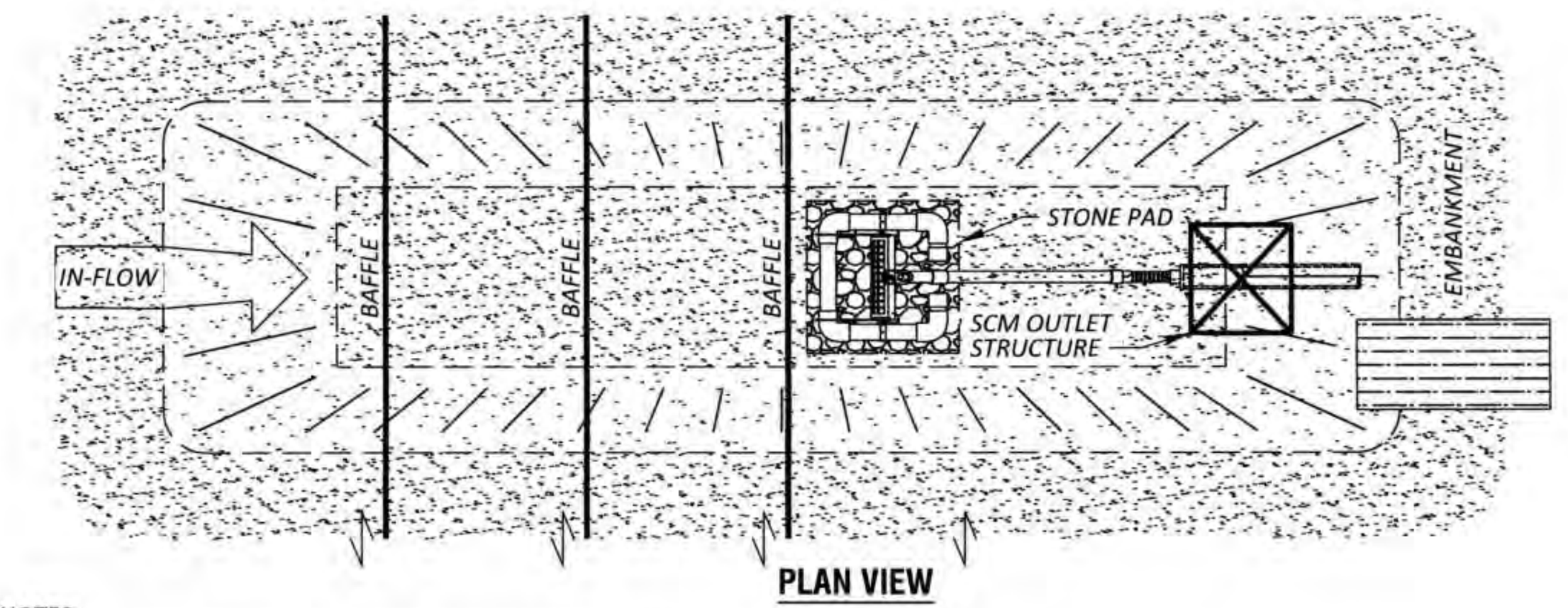

PLAN VIEW

NOTES:
1) DE-WATERING: ALLOW THE MAXIMUM REASONABLE DETENTION PERIOD BEFORE THE BASIN IS COMPLETELY DE-WATERED (AT LEAST 48 HOURS).
2) INFLOW RATE: REDUCE THE INFLOW VELOCITY & DIVERT ALL SEDIMENT-FREE RUNOFF.

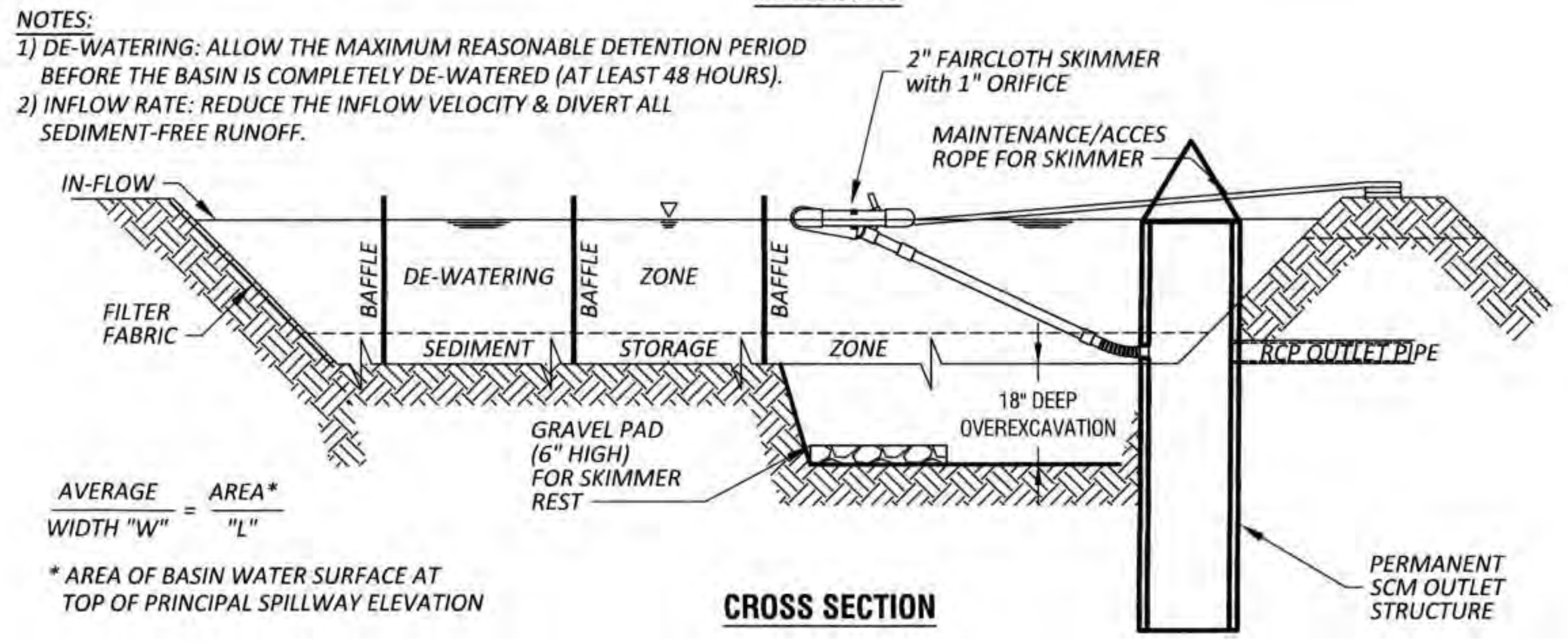

AVERAGE WIDTH "W" = AREA / "L"*

** AREA OF BASIN WATER SURFACE AT TOP OF PRINCIPAL SPILLWAY ELEVATION*

CROSS SECTION

SKIMMER BASIN

CONSTRUCTION SPECIFICATIONS:
1) CLEAR, GRUB AND STRIP THE AREA UNDER THE EMBANKMENT OF ALL VEGETATION AND ROOT MAT. REMOVE ALL SURFACE SOILCONTAINING HIGH AMOUNTS OF ORGANIC MATTER AND STOCKPILE OR DISPOSE OF IT PROPERLY. HAUL ALL OBJECTIONABLE MATERIAL TO THE DESIGNATED DISPOSAL AREA. PLACE TEMPORARY SEDIMENT CONTROL MEASURES BELOW BASIN AS NEEDED.
2) ENSURE THAT FILL MATERIAL FOR THE EMBANKMENT IS FREE OF ROOTS, WOODY VEGETATION, ORGANIC MATTER, AND OTHEROBJECTIONABLE MATERIAL. PLACE THE FILL IN LIFTS NOT TO EXCEED 9 INCHES, AND MACHINE COMPACT IT. OVER FILL THE EMBANKMENT 6 INCHES TO ALLOW FOR SETTLEMENT.
3) SHAPE THE BASIN TO THE SPECIFIED DIMENSIONS. PREVENT THE SKIMMING DEVICE FROM SETTLING INTO THE MUD BY EXCAVATING A SHALLOW PIT UNDER THE SKIMMER OF PROVIDING A LOW SUPPORT UNDER THE SKIMMER OF STONE OR TIMBER.
4) PLACE THE BARREL (TYPICALLY 4-INCH SCHEDULE 40 PVC PIPE) ON A FIRM, SMOOTH FOUNDATION OF IMPERVIOUS SOIL. DO NOT USE PERVIOUS MATERIAL SUCH AS SAND, GRAVEL, OR CRUSHED STONE AS BACKFILL AROUND THE PIPE. PLACE THE FILL MATERIAL AROUND THE PIPE SPILLWAY IN 4-INCH LAYERS AND COMPACT IT UNDER AND AROUND THE PIPE TO AT LEAST THE SAME DENSITY\ AS THE ADJACENT EMBANKMENT. CARE MUST BE TAKEN NOT TO RAISE THE PIPE FROM THE FIRM CONTACT WITH ITS FOUNDATION WHEN COMPACTING UNDER THE PIPE HAUNCHES.

PLACE A MINIMUM DEPTH OF 2 FEET OF COMPACTED BACKFILL OVER THE PIPE SPILLWAY BEFORE CROSSING IT WITH CONSTRUCTION EQUIPMENT. IN NO CASE SHOULD THE PIPE CONDUIT BE INSTALLED BY CUTTING A TRENCH THROUGH THE DAM AFTER THE EMBANKMENT IS COMPLETE.

5) ASSEMBLE THE SKIMMER FOLLOWING THE MANUFACTURERS INSTRUCTIONS, OR AS DESIGNED.
6) LAY THE ASSEMBLED SKIMMER ON THE BOTTOM OF THE BASIN WITH THE FLEXIBLE JOINT AT THE INLET OF THE BARREL PIPE.ATTACH THE FLEXIBLE JOINT TO THE BARREL PIPE AND POSITION THE SKIMMER OVER THE EXCAVATED PIT OR SUPPORT. BE SURE TO ATTACH A ROPE TO THE SKIMMER AND ANCHOR IT TO THE SIDE OF THE BASIN. THIS WILL BE USED TO PULL THE SKIMMER TOTHE SIDE FOR MAINTENANCE.
7) EARTHEN SPILLWAYS - INSTALL THE SPILLWAY IN UNDISTURBED SOIL TO THE GREATEST EXTENT POSSIBLE. THE ACHIEVEMENT OF PLANNED ELEVATIONS, GRADE, DESIGN WIDTH, AND ENTRANCE AND EXIT CHANNEL SLOPES ARE CRITICAL TO THE SUCCESSFUL OPERATION OF THE SPILLWAY. THE SPILLWAY SHOULD BE LINED WITH LAMINATED PLASTIC OR IMPERMEABLE GEOTEXTILE FABRIC. THE FABRIC MUST BE WIDE AND LONG ENOUGH TO COVER THE BOTTOM AND SIDES AND EXTEND ONTO THE TOP OF THE DAM FOR ANCHORING IN A TRENCH. THE EDGES MAY BE SECURED WITH 8-INCH STAPLES OR PINS. THE FABRIC MUST BE LONG ENOUGH TO EXTEND DOWN THE SLOPE AND EXIT ONTO STABLE GROUND. THE WIDTH OF THE FABRIC MUST BE ONE PIECE, NOT JOINED OR SPLICED; OTHERWISE WATER CAN GET UNDER THE FABRIC. IF THE LENGTH OF THE FABRIC IS INSUFFICIENT FOR THE ENTIRE LENGTH OF THE SPILLWAY, MULTIPLE SECTIONS, SPANNING THE COMPLETE WIDTH, MAY BE USED. THE UPPER SECTION(S) SHOULD OVERLAP THE LOWER SECTION(S) SO THAT WATER CANNOT FLOW UNDER THE FABRIC. SECURE THE UPPER EDGE AND SIDES OF THE FABRIC IN A TRENCH WITH STAPLES OR PINS.
8) INLETS - DISCHARGE WATER INTO THE BASIN IN A MANNER TO PREVENT EROSION. USE TEMPORARY SLOPE DRAINS OR DIVERSIONS WITH OUTLET PROTECTION TO DIVERT SEDIMENT-LADEN WATER TO THE UPPER END OF THE POOL AREA TO IMPROVE BASIN TRAP EFFICIENCY
9) EROSION CONTROL - CONSTRUCT THE STRUCTURE SO THAT THE DISTURBED AREA IS MINIMIZED. DIVERT SURFACE WATER AWAY FROM BARE AREAS. COMPLETE THE EMBANKMENT BEFORE THE AREA IS CLEARED. STABILIZE THE EMERGENCY SPILLWAY EMBANKMENT AND ALL OTHER DISTURBED AREAS ABOVE THE CREST OF THE PRINCIPAL SPILLWAY IMMEDIATELY AFTER CONSTRUCTION.
10) INSTALL POROUS BAFFLES.
11) AFTER ALL THE SEDIMENT-PRODUCING AREAS HAVE BEEN PERMANENTLY STABILIZED, REMOVE THE STRUCTURE AND ALL THE UNSTABLE SEDIMENT. SMOOTH THE AREA TO BLEND WITH THE ADJOINING AREAS AND STABILIZE PROPERLY.

MAINTENANCE:
INSPECT SKIMMER SEDIMENT BASINS AT LEAST WEEKLY AND AFTER EACH SIGNIFICANT (ONE-HALF INCH OR GREATER) RAINFALL EVENT AND REPAIR IMMEDIATELY. REMOVE SEDIMENT AND RESTORE THE BASIN TO ITS ORIGINAL DIMENSIONS WHEN SEDIMENT ACCUMULATES TO ONE-HALF THE HEIGHT OF THE FIRST BAFFLE PULL THE SKIMMER TO ONE SIDE SO THAT THE SEDIMENT UNDERNEATH IT CAN BE EXCAVATED. EXCAVATE THE SEDIMENT FROM THE ENTIRE BASIN, NOT JUST AROUND THE SKIMMER OF THE FIRST CELL. MAKE SURE VEGETATION GROWING IN THE BOTTOM OF THE BASIN DOES NOT HOLD DOWN THE SKIMMER.

REPAIR THE BAFFLES IF THEY ARE DAMAGED. RE-ANCHOR THE BAFFLES IF WATER IS FLOWING UNDERNEATH OR AROUND THEM.

IF THE SKIMMER IS CLOGGED WITH TRASH AND THERE IS WATER IN THE BASIN, USUALLY JERKING ON THE ROPE WILL MAKE THE SKIMMER BOB UP AND DOWN AND DISLODGE THE DEBRIS AND RESTORE FLOW. IF THIS DOES NOT WORK, PULL THE SKIMMER OVER TO THE SIDE OF THE BASIN AND REMOVE THE DEBRIS. ALSO CHECK THE ORIFICE INSIDE THE SKIMMER TO SEE IF IT IS CLOGGED; IF SO REMOVE THE DEBRIS.

IF THE SKIMMER ARM OR BARREL PIPE IS CLOGGED, THE ORIFICE CAN BE REMOVED AND THE OBSTRUCTION CLEARED WITH A PLUMBER'S SNAKE OR BY FLUSHING WITH WATER. BE SURE AND REPLACE THE ORIFICE BEFORE REPOSITIONING THE SKIMMER.

CHECK THE FABRIC LINED SPILLWAY FOR DAMAGE AND MAKE ANY REQUIRED REPAIRS WITH FABRIC THAT SPANS THE FULL WIDTH OF THE SPILLWAY. CHECK THE EMBANKMENT, SPILLWAYS, AND OUTLET FOR EROSION DAMAGE, AND INSPECT THE EMBANKMENT FOR PIPING AND SETTLEMENT. MAKE ALL NECESSARY REPAIRS IMMEDIATELY. REMOVE ALL TRASH AND OTHER DEBRIS FROM THE SKIMMER AND POOL AREAS.

FREEZING WEATHER CAN RESULT IN ICE FORMING IN THE BASIN. SOME SPECIAL PRECAUTIONS SHOULD BE TAKEN IN THE WINTER TO PREVENT THE SKIMMER FROM PLUGGING WITH ICE.

TEMPORARY DITCH MAINTENANCE REQUIREMENTS:

INSPECT TEMPORARY DIVERSIONS ONCE A WEEK AND AFTER EVERY RAINFALL. IMMEDIATELY REMOVE SEDIMENT FROM THE FLOW AREA AND REPAIR THE DIVERSION RIDGE. CAREFULLY CHECK OUTLETS AND MAKE TIMELY REPAIRS AS NEEDED. WHEN THE AREA PROTECTED IS PERMANENTLY STABILIZED, REMOVE THE RIDGE AND THE CHANNEL TO BLEND WITH THE NATURAL GROUND LEVEL AND APPROPRIATELY STABILIZE IT.

SILT FENCE MAINTENANCE REQUIREMENTS:

INSPECT SEDIMENT FENCES AT LEAST ONCE A WEEK AND AFTER EACH RAINFALL, MAKE ANY REQUIRED REPAIRS IMMEDIATELY.
SHOULD THE FABRIC OF A SEDIMENT FENCE COLLAPSE, TEAR, DECOMPOSE OR BECOME INEFFECTIVE, REPLACE IT PROMPTLY.
REMOVE SEDIMENT DEPOSITS AS NECESSARY TO PROVIDE ADEQUATE STORAGE VOLUME FOR THE NEXT RAIN AND TO REDUCE PRESSURE ON THE FENCE. TAKE CARE TO AVOID UNDERMINING THE FENCE DURING CLEANOUT.
REMOVE ALL FENCING MATERIALS AND UNSTABLE SEDIMENT DEPOSITS AND BRING THE AREA TO GRADE AND STABILIZE IT AFTER THE CONTRIBUTING DRAINAGE AREA HAS BEEN PROPERLY STABILIZED.

CONCRETE WASHOUT MAINTENANCE REQUIREMENTS:

MATERIALS USED TO CONSTRUCT TEMPORARY CONCRETE WASHOUT FACILITIES SHALL BE REMOVED FROM THE SITE OF THE WORK AND DISPOSED OF OR RECYCLED.
HOLES, DEPRESSIONS OR OTHER GROUND DISTURBANCE CAUSED BY THE REMOVAL OF THE TEMPORARY CONCRETE WASHOUT FACILITIES SHALL BE BACKFILLED, REPAIRED, AND STABILIZED TO PREVENT EROSION.

TEMPORARY GRAVEL CONSTRUCTION ENTRANCE MAINTENANCE REQUIREMENTS:

MAINTAIN THE GRAVEL PAD IN A CONDITION TO PREVENT MUD OR SEDIMENT FROM LEAVING THE CONSTRUCTION SITE. THIS MAY REQUIRE PERIODIC TOP DRESSING WITH 2-INCH STONE. AFTER EACH RAINFALL, INSPECT ANY STRUCTURE USED TO TRAP SEDIMENT AND CLEAN IT OUT AS NECESSARY. IMMEDIATELY REMOVE ALL OBJECTIONABLE MATERIALS SPILLED, WASHED, OR TRACKED ONTO PUBLIC ROADWAYS.

SILT FENCE OUTLET MAINTENANCE REQUIREMENTS:

PER NCG-01, INSPECT OUTLET AT LEAST ONCE A WEEK AND AFTER EACH 1 INCH OR GREATER RAINFALL EVENT.
COMPLETE ANY REQUIRED REPAIRS IMMEDIATELY.
FRESHEN STONE WHEN SEDIMENT ACCUMULATION EXCEEDS 6 INCHES. KEEP MESH FREE OF DEBRIS TO PROVIDE ADEQUATE FLOW.
REMOVE SEDIMENT WHEN HALF OF STONE OUTLET IS COVERED.
REPLACE STONE AS NEEDED TO FACILITATE DE-WATERING.

INLET PROTECTION MAINTENANCE REQUIREMENTS:

INSPECT SEDIMENT FENCES AT LEAST ONCE A WEEK AND AFTER EACH 1 INCH OR GREATER RAINFALL. MAKE ANY REQUIRED REPAIRS IMMEDIATELY.
CLEAR THE MESH WIRE OF ANY DEBRIS OR OTHER OBJECTS TO PROVIDE ADEQUATE FLOW FOR SUBSEQUENT RAINS. TAKE CARE NOT TO DAMAGE OR UNDERCUT THE MESH DURING SEDIMENT REMOVAL.
REPLACE STONE AS NEEDED.

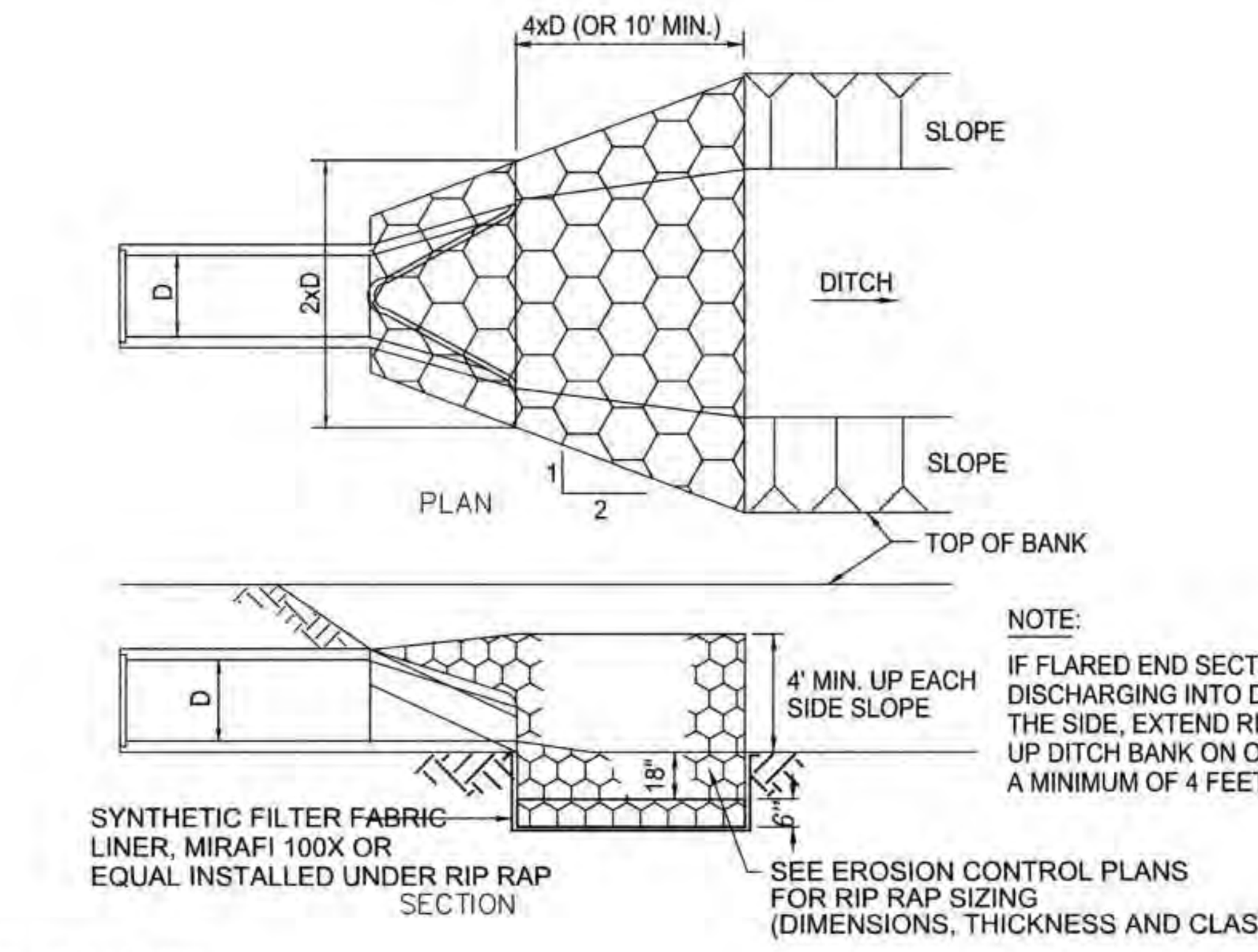

NOTE:
IF FLARED END SECTION IS DISCHARGING INTO DITCH FROM THE SIDE, EXTEND RIP RAP UP DITCH BANK ON OFF-SIDE A MINIMUM OF 4 FEET.

RIPRAP OUTLET PROTECTION

CONSTRUCTION SPECIFICATIONS

1. ENSURE THAT THE SUBGRADE FOR THE FILTER AND RIPRAP FOLLOWS THE REQUIRED LINES AND GRADES SHOWN IN THE PLAN. COMPACT ANY FILL REQUIRED IN THE SUBGRADE TO THE DENSITY OF THE SURROUNDING UNDISTURBED MATERIAL. LOW AREAS IN THE SUBGRADE ON UNDISTURBED SOIL MAY ALSO BE FILLED BY INCREASING THE RIPRAP THICKNESS.
2. THE RIPRAP AND GRAVEL FILTER MUST CONFORM TO THE SPECIFIED GRADING LIMITS SHOWN ON THE PLANS.
3. FILTER CLOTH, WHEN USED, MUST MEET DESIGN REQUIREMENTS AND BE PROPERLY PROTECTED FROM PUNCHING OR TEARING DURING INSTALLATION. REPAIR ANY DAMAGE BY REMOVING THE RIPRAP AND PLACING ANOTHER PIECE OF FILTER CLOTH OVER THE DAMAGED AREA. ALL CONNECTING JOINTS SHOULD OVERLAP SO THE TOP LAYER IS ABOVE THE DOWNSTREAM LAYER A MINIMUM OF 1 FOOT. IF THE DAMAGE IS EXTENSIVE, REPLACE THE ENTIRE FILTER CLOTH.
4. RIPRAP MAY BE PLACED BY EQUIPMENT, BUT TAKE CARE TO AVOID DAMAGING THE FILTER.
5. THE MINIMUM THICKNESS OF THE RIPRAP SHOULD BE 1.5 TIMES THE MAXIMUM STONE DIAMETER.
6. RIPRAP MAY BE FIELD STONE OR ROUGH QUARRY STONE. IT SHOULD BE HARD, ANGULAR, HIGHLY WEATHER–RESISTANT AND WELL GRADED.
7. CONSTRUCT THE APRON ON ZERO GRADE WITH NO OVERFILL AT THE END. MAKE THE TOP OF THE RIPRAP AT THE DOWNSTREAM END LEVEL WITH THE RECEIVING AREA OR SLIGHTLY BELOW IT.
8. ENSURE THAT THE APRON IS PROPERLY ALIGNED WITH THE RECEIVING STREAM AND PREFERABLY STRAIGHT THROUGHOUT ITS LENGTH. IF A CURVE IS NEEDED TO FIT SITE CONDITIONS, PLACE IT IN THE UPPER SECTION OF THE APRON.
9. IMMEDIATELY AFTER CONSTRUCTION, STABILIZE ALL DISTURBED AREAS WITH VEGETATION

MAINTENANCE

INSPECT RIPRAP OUTLET STRUCTURES WEEKLY AND AFTER SIGNIFICANT (1/2 INCH OR GREATER) RAINFALL EVENTS TO SEE IF ANY EROSION AROUND OR BELOW THE RIPRAP HAS TAKEN PLACE, OR IF STONES HAVE BEEN DISLODGED. IMMEDIATELY MAKE ALL NEEDED REPAIRS TO PREVENT FURTHER DAMAGE.

FLARED END SECTION WITH RIP RAP

N.T.S.

CONSTRUCTION SCHEDULE

1. OBTAIN PLAN APPROVALS AND ALL APPLICABLE PERMITS.
2. FLAG LIMITS OF ROUGH GRADING AND ESTABLISH GRADE LIMITS AS NEEDED.
3. CONTACT LAND QUALITY SECTION AT 910-433-3300 AND THEN HOLD PRECONSTRUCTION MEETING WITH GRADING CONTRACTOR, EROSION CONROL ADMINISTRATOR, PROJECT ENGINEER AND OWNER BEFORE WORK BEGINS
4. INSTALL TEMPORARY GRAVEL CONSTRUCTION ENTRANCE.
5. INSTALL THE PERIMETER SEDIMENT FENCES AS THE FIRST CONSTRUCTION ACTIVITY CLEAR ENOUGH TO INSTALL SILT FENCE AND DIVERSION SWALES.
6. INSTALL DIVERSION SWALES AND TEMPORARY SEDIMENT BASIN.
7. PROVIDE A GROUND COVER (TEMPORARY OR PERMANENT) ON EXPOSED SLOPES 14 CALENDAR DAYS FOLLOWING COMPLETION OF ANY PHASE OF GRADING FOR SLOPES 3:1 OR FLATTER INCLUDING ALL OTHER SLOPES 4:1 OR FLATTER. PROVIDE A GROUND COVER (TEMPORARY OR PERMANENT) ON EXPOSED SLOPES WITHIN 7 CALENDAR DAYS FOLLOWING COMPLETION OF ANY PHASE OF GRADING FOR SLOPES 3:1 OR STEEPER INCLUDING ALL PERMANENT DIKES, SWALES, DITCHES AND SLOPES AND DISTRUBANCES WITHIN HIGH QUALITY WATER (HQWQ) ZONES.
8. ADDITIONAL EROSION AND SEDIMENTATION CONTROL MEASURES MAY BE REQUIRED BY THE STATE OR OWNER IF DEEMED NECESSARY.
9. AFTER SITE IS STABILIZED, REMOVE ALL TEMPORARY MEASURES, FINE GRADE DISTURBED AREAS, AND INSTALL PERMANENT VEGETATION ON DISTURBED AREAS.
10. MAINTAIN PERMANENT VEGETATION BY TOP DRESSING WITH 700 LBS PER ACRE OF FERTILIZER EVERY 6 MONTHS UNTIL THE COMPLETION OF THE PROJECT.
11. WITHIN 6" OF FINAL GRADE, RE-DISTRIBUTE 6" OF TOP SOIL
12. FINE GRADE, PERMANENTLY SEED AND MULCH ALL DISTURBED AREAS
13. REMOVE ALL REMAINING TEMPORARY EROSION AND SEDIMENTATION CONTROL MEASURES UPON COMPLETION AND STABILIZATION OF PROJECT.
14. Closeout your Certificate of Coverage (COC) which was obtained at the beginning. See the Stage-1 notes at the start of grading, for the note about the eNOI (electronic Notice of Intent) and your COC. As the Financially Responsible Party shown on the FRO form submitted for this project, you then "Close-out" the COC after completion of your land disturbing activity. (The eNOI form may be accessed at deq.nc.gov/NCG01.)

CALL BEFORE YOU DIG!
WWW.NC811.ORG
N.C. ONE-CALL CENTER
IT'S THE LAW!

GENERAL NOTES

FILL COMPACTION REQUIREMENTS

ITEM	STRUCTURAL FILL	GENERAL FILL
MAXIMUM LIFT THICKNESS	9 INCHES OR LESS IN LOOSE THICKNESS WHEN HEAVY, SELF-PROPELLED COMPACTION EQUIPMENT IS USED. 4 TO 6 INCHES IN LOOSE THICKNESS WHEN HAND-GUIDED EQUIPMENT (I.E. JUMPING JACK OR PLATE COMPACTOR) IS USED.	SAME AS STRUCTURAL FILL
MINIMUM COMPACTION REQUIREMENTS[1, 2]	95% OF MAX	95% OF MAX
WATER CONTENT RANGE[1]	-2% TO +2% OF OPTIMUM	AS REQUIRED TO ACHIEVE MIN. COMPACTION REQUIREMENTS

1. MAXIMUM DENSITY AND OPTIMUM WATER CONTENT AS DETERMINED BY THE STANDARD PROCTOR TEST (ASTM D 698).
2. HIGH PLASTICITY COHESIVE FILL SHOULD NOT BE COMPACTED TO MORE THAN 100% OF STANDARD PROCTOR MAXIMUM DRY DENSITY.

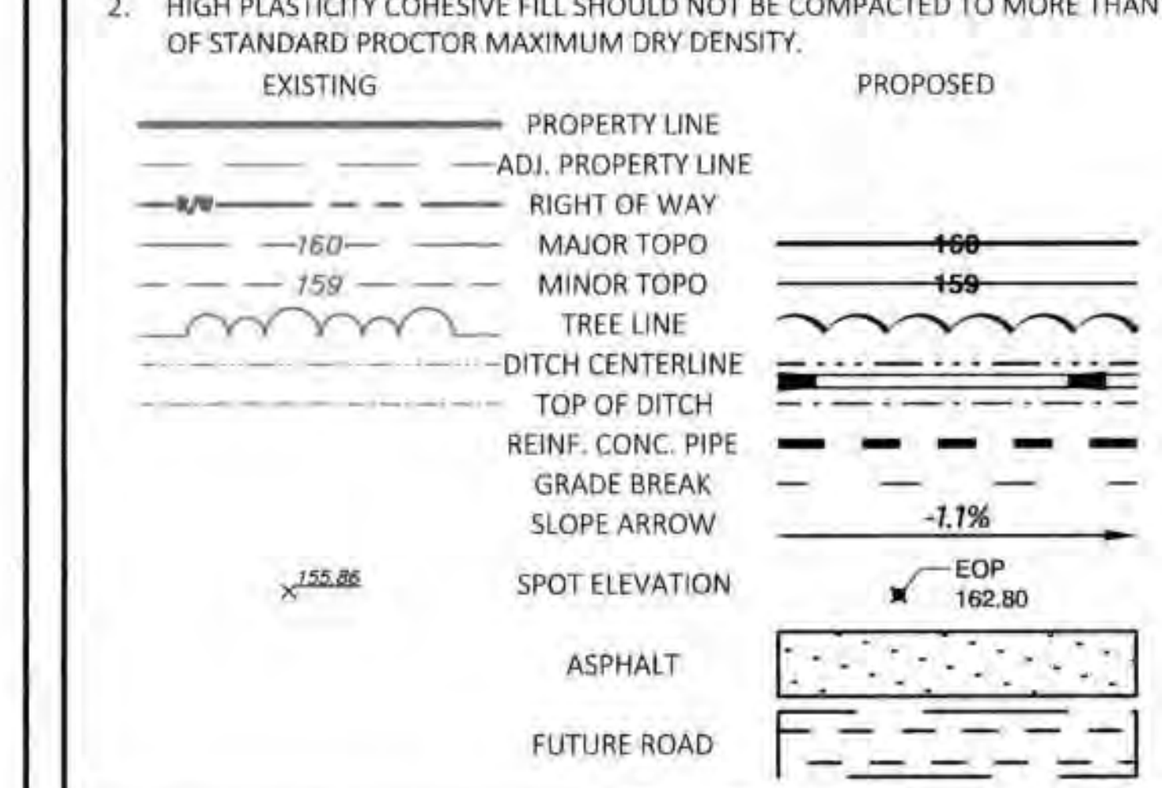

RAI Project #2023139

NC License: F-0334

Rivers & ASSOCIATES, INC.
riversandassociates.com Since 1918
Six Forks Place III Ste. 230
353 E. Six Forks Road
Raleigh, NC 27609
919.594.1626
Engineers
Planners
Surveyors
Landscape Architects

SCO ID # 23-26923-01A

NO	REVISION	DATE

SEAL

NORTH CAROLINA PROFESSIONAL SEAL 22508 ENGINEER BRIAN P. RUFF 10-18-24

JKF ARCHITECTURE

625 LYNNDALE CT., SUITE F, GREENVILLE, NC 27858 252-355-1068

CRAVEN COMMUNITY COLLEGE
CORPORATE TRAINING CENTER
CITY OF NEW BERN - CRAVEN COUNTY - NC

DRAWING TITLE
SEDIMENTATION & EROSION CONTROL DETAILS

SCALE	AS SHOWN
DRAWN	MS, CS
CHECKED	JSJ, BPR
DATE	9-1-2024
PROJECT NO.	2023139

DRAWING NO
C5.1

© COPYRIGHT, JKF ARCHITECTURE PC, JOHN K. FARKAS, AIA

R:\LANDDEV\JKF_ARCH-CCC_CORP_TRNG_CTR-2023139\CADD_DWG\SHEETS\C4.1 EC PLAN-STAGE 1_C5.1_C5.2.DWG - C5.1 SEDIMENTATION & EROSION CONTROL DETAILS - 9/19/2024 12:04:42 PM

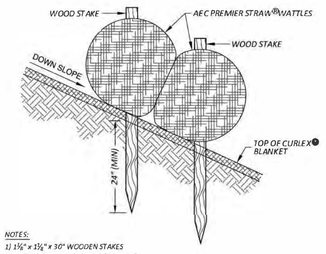

NOTES:
1) 1½" x 1½" x 30" WOODEN STAKES ARE RECOMMENDED FOR 9" AND 12" AEC PREMIER STRAW® WATTLES.
2) 1½" x 1½" x 48" WOODEN STAKES ARE RECOMMENDED FOR 20" AEC PREMIER STRAW® WATTLES.

(2) WATTLES (WITH BLANKET ON SLOPE)

N.T.S.

TEMPORARY BAFFLE NOTES:
1) GRADE THE BASIN SO THAT THE BOTTOM IS LEVEL (FRONT TO BACK & SIDE TO SIDE).
2) INSTALL POSTS OR SAWHORSES THE WIDTH OF THE SEDIMENT TRAP.
3) STEEL POSTS SHOULD BE DRIVEN TO A DEPTH OF 24", SPACED A MAXIMUM OF 4' APART & INSTALLED ON THE SIDES OF THE BASIN AS
WELL. THE TOP OF THE FABRIC SHOULD BE 6" HIGHER THAN THE INVERT OF THE SPILLWAY. TOPS OF BAFFLES SHOULD BE 9" LOWER
THAN THE TOP OF THE BERMS.
4) INSTALL AT LEAST (3) ROWS OF BAFFLES BETWEEN THE INLET & OUTLET DISCHARGE POINT. BASINS 20' IN LENGTH MAY USE (2) BAFFLES.
5) WHEN USING POSTS, ADD SUPPORT WIRE OR ROPE ACROSS THE TOP OF THE MEASURE TO PREVENT SAGGING.
6) WRAP POROUS MATERIAL (JUTE BACKED OR COIR) OVER SAWHORSES OR THE TOP WIRE. HAMMER REBAR INTO THE SAWHORSE LEGS
FOR ANCHORING. THE FABRIC SHOULD HAVE 5% TO 10% OPENINGS IN THE WEAVE, ATTACH FABRIC TO A ROPE AND A SUPPORT
STRUCTURE WITH ZIP TIES, WIRE OR STAPLES.
7) THE BOTTOM & SIDES OF THE FABRIC SHOULD BE ANCHORED IN A TRENCH OR PINNED WITH 8" EROSION CONTROL MATTING STAPLES.
8) DO NOT SPLICE FABRIC, BUT USE A CONTINUOUS PIECE ACROSS THE BASIN.

MAINTENANCE CRITERIA:
1) INSPECT BAFFLES AT LEAST ONCE A WEEK & AFTER EACH RAINFALL. MAKE ANY REQUIRED REPAIRS IMMEDIATELY.
2) BE SURE TO MAINTAIN ACCESS TO BAFFLES. SHOULD THE FABRIC OF THE BAFFLE COLLAPSE, TEAR, DECOMPOSE OR BECOME
INEFFECTIVE, REPLACE IT PROMPTLY.
3) REMOVE SEDIMENT DEPOSITS WHEN IT REACHES HALF FULL TO PROVIDE ADEQUATE STORAGE VOLUME FOR THE NEXT RAIN & TO
REDUCE PRESSURE ON THE BAFFLES. TAKE CARE TO AVOID DAMAGING THE BAFFLES DURING CLEAN OUT. SEDIMENT DEPTH
SHOULD NEVER EXCEED HALF THE DESIGN STORAGE DEPTH.
4) AFTER THE CONTRIBUTING DRAINAGE AREA HAS BEEN PROPERLY STABILIZED, REMOVE ALL BAFFLE MATERIALS & UNSTABLE
SEDIMENT DEPOSITS. BRING THE AREA TO GRADE & STABILIZE IT.

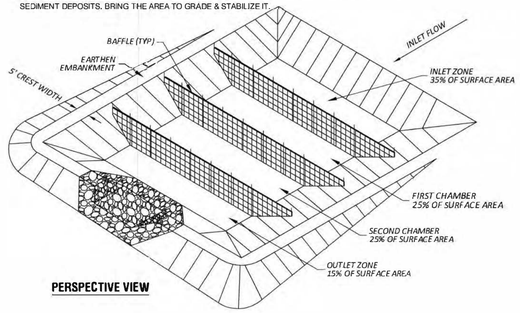

PERSPECTIVE VIEW

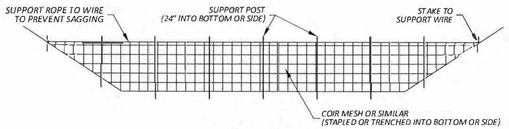

ELEVATION AT BAFFLE

TEMPORARY BAFFLE INSTALLATION

N.T.S.

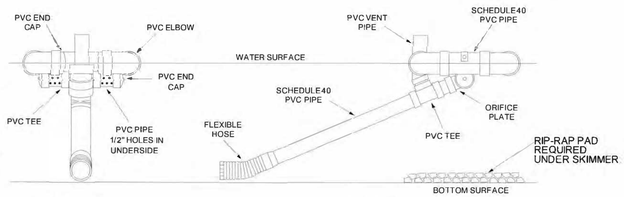

END VIEW FRONT VIEW

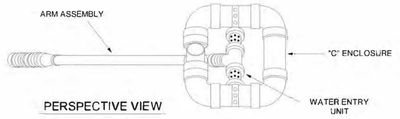

PERSPECTIVE VIEW

NOTE: SKIMMER TO BE TETHERED

SKIMMER DETAIL

N.T.S.

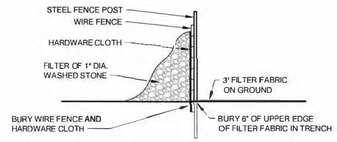

MAINTENANCE

INSPECT SEDIMENT FENCES AT LEAST ONCE A WEEK AND AFTER EACH RAINFALL. MAKE ANY REQUIRED REPAIRS IMMEDIATELY.

SHOULD THE FABRIC OF A SEDIMENT FENCE COLLAPSE, TEAR, DECOMPOSE OR BECOME INEFFECTIVE, REPLACE IT PROMPTLY.

REMOVE SEDIMENT DEPOSITS AS NECESSARY TO PROVIDE ADEQUATE STORAGE VOLUME FOR THE NEXT RAIN AND TO REDUCE PRESSURE ON THE FENCE. TAKE CARE TO AVOID UNDERMINING THE FENCE DURING CLEANOUT.

REMOVE ALL FENCING MATERIALS AND UNSTABLE SEDIMENT DEPOSITS AND BRING THE AREA TO GRADE AND STABILIZE IT AFTER THE CONTRIBUTING DRAINAGE AREA HAS BEEN PROPERLY STABILIZED.

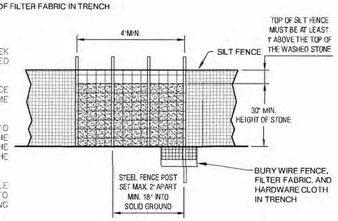

SILT FENCE OUTLET

N.T.S.

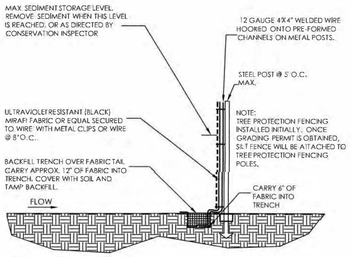

NOTES:
1. TOTAL AREA FLOWING TO SILT FENCE MAY NOT EXCEED 1 ACRE.
2. DO NOT USE SILT FENCES AT PIPE OUTLETS OR IN AREAS OF CONCENTRATED FLOW (CREEKS, DITCH LINES, SWALES, ETC.)
3. ORANGE TREE PROTECTION FENCE MAY BE REQUIRED ON OPPOSITE SIDE DEPENDING ON FENCE LOCATION.

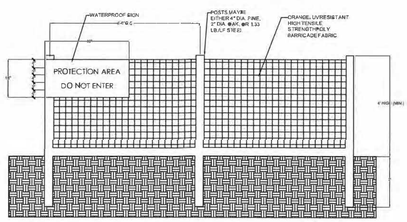

NOTES:
- WARNING SIGNS TO BE MADE OF DURABLE WATERPROOF MATERIAL.
- ALL LETTERS TO BE AT LEAST 3" HIGH, CLEARLY LEGIBLE AND SPACED AS INDICATED ABOVE.
- SIGNS TO BE PLACED 200' ON CENTER, MAX.
- SIGNS TO BE PLACED AT EACH END OF LINEAR TREE PROTECTION AREA AND 200' ON CENTER THEREAFTER.
- FOR TREE PROTECTION AREAS LESS THAN 200' IN PERIMETER, PROVIDE NO LESS THAN ONE SIGN PER PROTECTION AREA AND/OR SIDE.
- ATTACH SIGNS SECURELY TO FENCE POSTS AND FABRIC.
- FABRIC MUST BE ATTACHED TO APPROVED POSTS ONLY. DO NOT ATTACH TO TREES
- MAINTAIN TREE PROTECTION FENCE THROUGHOUT DURATION OF PROJECT FENCING MUST REMAIN UPRIGHT AND SLACK FREE.
- ADDITIONAL SIGNS AND/OR PROTECTION MEASURES MAY BE REQUIRED BY THE PLANNING DEPARTMENT BASED UPON ACTUAL FIELD CONDITIONS.
- FAILING TO MAINTIAN TREE PROTECTION MEASURES MAY RESULT IN FINES AND/OR PERMIT REVOCATION

SILT/TREE PROTECTION FENCE

TREE PROTECTION NOTES

A) CHECK THE TOWN OF APEX EROSION CONTROL CONSTRUCTION SEQUENCE FOR APPROPRIATE TIME TO INSTALL TREE PROTECTION FENCE.

B) INSTALL TREE PROTECTION FENCING ALONG THE ENTIRE LENGTH OF THE PROPOSED CLEARING LIMITS AS DENOTED ON THE PLAN.

C) LOCATE TREE PROTECTION MEASURES SO THAT THEY MAINTAIN A 6 FOOT RADIUS AROUND EXISTING PLANTS OR PROVIDE A 1 FOOT RADIUS FOR EACH 1 INCH DIAMETER OF TREES (MEASURED AT A POINT 4½ FEET ABOVE GROUND), WHICHEVER IS GREATER.

D) POST A SIGN ON THE FENCING STATING:"TREE PROTECTION AREA/DO NOT ENTER" AND "PROHIBIDO ENTRAR ZONA PROTECTORA PARA LOS ARBOLES".

E) AT THE START OF GRADING INVOLVING THE LOWERING OF THE EXISTING GRADE AROUND A TREE OR THE STRIPPING OF TOPSOIL, MAKE A CLEAN, SHARP, VERTICAL CUT AT THE EDGE OF THE TREE SAVE AREA AT THE SAME TIME AS OTHER EROSION CONTROL MEASURES ARE INSTALLED. INSTALL THE TREE PROTECTION FENCING ON THE SIDE FARTHEST AWAY FROM THE TREE TRUNK AND SHALL REMAIN IN PLACE UNTIL ALL CONSTRUCTION IN THE VICINITY OF THE TREES IS COMPLETE. NO STORAGE OF MATERIALS, FILL, OR EQUIPMENT AND NO TRESPASSING SHALL BE ALLOWED WITHIN THE PROTECTED AREA.

F) TREE PROTECTION FENCING MUST BE INSTALLED PRIOR TO ISSUANCE OF ANY PERMITS.

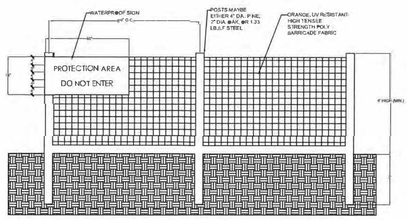

NOTES:
- WARNING SIGNS TO BE MADE OF DURABLE WATERPROOF MATERIAL.
- ALL LETTERS TO BE AT LEAST 3" HIGH, CLEARLY LEGIBLE AND SPACED AS INDICATED ABOVE.
- SIGNS TO BE PLACED 200' ON CENTER, MAX.
- SIGNS TO BE PLACED AT EACH END OF LINEAR TREE PROTECTION AREA AND 200' ON CENTER THEREAFTER.
- FOR TREE PROTECTION AREAS LESS THAN 200' IN PERIMETER, PROVIDE NO LESS THAN ONE SIGN PER PROTECTION AREA AND/OR SIDE.
- ATTACH SIGNS SECURELY TO FENCE POSTS AND FABRIC.
- FABRIC MUST BE ATTACHED TO APPROVED POSTS ONLY. DO NOT ATTACH TO TREES
- MAINTAIN TREE PROTECTION FENCE THROUGHOUT DURATION OF PROJECT FENCING MUST REMAIN UPRIGHT AND SLACK FREE.
- ADDITIONAL SIGNS AND/OR PROTECTION MEASURES MAY BE REQUIRED BY THE PLANNING DEPARTMENT BASED UPON ACTUAL FIELD CONDITIONS.
- FAILING TO MAINTIAN TREE PROTECTION MEASURES MAY RESULT IN FINES AND/OR PERMIT REVOCATION

TREE PROTECTION FENCE

Seedbed Preparation:

1. Chisel compacted areas and spread topsoil 3" deep over adverse soil conditions, if available.
2. Rip entire area 8" deep.
3. Remove all loose rock, roots, and other obstructions leaving surface reasonably smooth and uniform.
4. Apply agricultural lime and fertilizer uniformly and mix with soil.
5. Continue tillage until a well pulverized, reasonably uniform seedbed is prepared 4" to 6" deep.
6. Spread seed on freshly prepared seedbed and cover lightly with seeding equipment or cultipacker after seeding.
7. Mulch immediately after seeding and anchor mulch.

NC DEQ TEMPORARY & PERMENANT SEEDING

N.T.S.

Table 6.10a Temporary Seeding Recommendations for Late Winter and Early Spring

Seeding mixture

Species	Rate (lb/acre)
Rye (grain)	120
Annual lespedeza (Kobe in Piedmont and Coastal Plain, Korean in Mountains)	50

Omit annual lespedeza when duration of temporary cover is not to extend beyond June.

Seeding dates
Mountains—Above 2500 feet: Feb. 15 - May 15
Below 2500 feet: Feb. 1- May 1
Piedmont—Jan. 1 - May 1
Coastal Plain—Dec. 1 - Apr. 15

Soil amendments
Follow recommendations of soil tests or apply 2,000 lb/acre ground agricultural limestone and 750 lb/acre 10-10-10 fertilizer.

Mulch
Apply 4,000 lb/acre straw. Anchor straw by tacking with asphalt, netting, or a mulch anchoring tool. A disk with blades set nearly straight can be used as a mulch anchoring tool.

Maintenance
Refertilize if growth is not fully adequate. Reseed, refertilize and mulch immediately following erosion or other damage.

Table 6.10b Temporary Seeding Recommendations for Summer

Seeding mixture

Species	Rate (lb/acre)
German millet	40

In the Piedmont and Mountains, a small-stemmed Sudangrass may be substituted at a rate of 50 lb/acre.

Seeding dates
Mountains—May 15 - Aug. 15
Piedmont—May 1 - Aug. 15
Coastal Plain—Apr. 15 - Aug. 15

Soil amendments
Follow recommendations of soil tests or apply 2,000 lb/acre ground agricultural limestone and 750 lb/acre 10-10-10 fertilizer.

Mulch
Apply 4,000 lb/acre straw. Anchor straw by tacking with asphalt, netting, or a mulch anchoring tool. A disk with blades set nearly straight can be used as a mulch anchoring tool.

Maintenance
Refertilize if growth is not fully adequate. Reseed, refertilize and mulch immediately following erosion or other damage.

Table 6.10c Temporary Seeding Recommendations for Fall

Seeding mixture

Species	Rate (lb/acre)
Rye (grain)	120

Seeding dates
Mountains—Aug. 15 - Dec. 15
Coastal Plain and Piedmont—Aug. 15 - Dec. 30

Soil amendments
Follow soil tests or apply 2,000 lb/acre ground agricultural limestone and 1,000 lb/acre 10-10-10 fertilizer.

Mulch
Apply 4,000 lb/acre straw. Anchor straw by tacking with asphalt, netting, or a mulch anchoring tool. A disk with blades set nearly straight can be used as a mulch anchoring tool.

Maintenance
Repair and refertilize damaged areas immediately. Topdress with 50 lb/acre of nitrogen in March. If it is necessary to extent temporary cover beyond June 15, overseed with 50 lb/acre Kobe (Piedmont and Coastal Plain) or Korean (Mountains) lespedeza in late February or early March.

GENERAL NOTES

RAI Project #2023139

NC License: F-0334
Rivers & ASSOCIATES, INC. Since 1918
riversandassociates.com
Six Forks Place III Ste. 230
353 E. Six Forks Road
Raleigh, NC 27609
919.594.1626
Engineers
Planners
Surveyors
Landscape Architects

SCO ID # 23-26923-01A

NO	REVISION	DATE

SEAL

NORTH CAROLINA PROFESSIONAL ENGINEER BRIAN P. RIES 225018 10-18-24

JKF ARCHITECTURE
625 LYNDALE CT., SUITE F, GREENVILLE NC 27858 252-355-1068

CRAVEN COMMUNITY COLLEGE CORPORATE TRAINING CENTER
CITY OF NEW BERN - CRAVEN COUNTY - NC

DRAWING TITLE
SEDIMENTATION & EROSION CONTROL DETAILS

SCALE	AS SHOWN
DRAWN	MS, CS
CHECKED	JSJ, BPR
DATE	9-1-2024
PROJECT NO.	2023139
DRAWING NO.	C5.2

© COPYRIGHT, JKF ARCHITECTURE PC, JOHN K. FARKAS, AIA

R:\LANDDEV\JKF_ARCH-CDC_CORP_TRNG_CTR-2023139\CADD_DWGS\SHEETS\C4.1 EC PLAN-STAGE 1_C5.1_C5.2.DWG - C5.2 SEDIMENTATION & EROSION CONTROL DETAILS - 9/19/2024 12:04:42 PM

EROSION CONTROL NOTES:

1. ALL WORK WILL BE DONE IN ACCORDANCE WITH THE REQUIREMENTS OF THE NORTH CAROLINA DEPARTMENT OF ENVIRONMENT AND NATURAL RESOURCES. NO LAND DISTURBING ACTIVITY BEYOND THAT REQUIRED TO INSTALL THE APPROPRIATE EROSION CONTROL MEASURE MAY PROCEED UNTIL MEASURES ARE INSPECTED AND APPROVED.
2. FOLLOWING STRIPPING OF SITE, ALL STORM DRAINAGE STRUCTURES SHALL BE INSTALLED. SILT FENCES SHALL BE PLACED ALONG PROPERTY LINES AS INDICATED ON PLANS TO PROTECT ADJACENT DEVELOPMENTS. ROCK INLET SEDIMENT TRAPS SHALL BE INSTALLED AROUND ALL DRAINAGE STRUCTURES TO COLLECT SURFACE RUNOFF AND CONTROL SILTATION AND RELEASE WATER AT A GRADUAL RATE. ALL DISTURBED AREAS WILL BE GRADED, SEEDED AND MULCHED
3. ALL SHOULDERS SHALL BE SEEDED TO STABILIZE THE SOIL. SEED BED PREPARATION SHALL BE CONDUCTED ACCORDING TO NORTH CAROLINA DEPARTMENT OF TRANSPORTATION STANDARD SPECIFICATIONS FOR ROADS AND STRUCTURES (NCDOT). THE GROUND SURFACE SHALL BE CLEARED OF STUMPS, STONES, ROOTS, CABLES, WIRE, GRADE STAKES, AND OTHER MATERIALS THAT MIGHT HINDER PROPER GRADING, TILLAGE, SEEDING OR SUBSEQUENT MAINTENANCE OPERATIONS. GRADES ON THE AREA TO BE SEEDED SHALL BE MAINTAINED IN A TRUE AND EVEN CONDITION. MAINTENANCE SHALL INCLUDE ANY NECESSARY REPAIRS TO PREVIOUSLY GRADED AREAS. ALL GRADED AREAS SHALL BE THOROUGHLY TILLED TO A DEPTH OF AT LEAST FOUR (4) INCHES BY PLOWING, DISKING, HARROWING, OR OTHER APPROVED METHODS UNTIL THE CONDITION OF THE SOIL IS ACCEPTABLE. ON SITES WHERE SOIL CONDITIONS ARE SUCH THAT HIGH CLAY CONTENT AND EXCESSIVE COMPACTION CAUSE DIFFICULTY IN GETTING CLODS AND LUMPS EFFECTIVELY PULVERIZED, THE CONTRACTOR SHALL USE THE ROTARY TILLAGE MACHINERY UNTIL THE MIXING OF THE SOIL IS ACCEPTABLE AND NO CLODS OR CLUMPS REMAIN LARGER THAN 1 1/2 INCHES IN DIAMETER. A FIRM AND COMPACT SEED BED IS REQUIRED AND AFTER BEING GRADED, THE SEED BED SHALL BE LIGHTLY COMPACTED WITH A LAND ROLLER, SUCH AS A CULTIPACKER, BEFORE AND AFTER SEEDING. LIMESTONE SHALL BE DOLOMITIC AGRICULTURE GROUND LIMESTONE CONTAINING NOT LESS THAN 10 PERCENT MAGNESIUM OXIDE. LIME SHALL BE UNIFORMLY APPLIED AT THE RATE OF 2 TONS PER ACRE AS TESTING REQUIRES PER THE SPECIFICATIONS. IF REQUIRED PER SPECIFICATIONS, FERTILIZER SHALL BE INCORPORATED INTO THE UPPER THREE OR FOUR INCHES OF PREPARED SEED BED JUST PRIOR TO THE LAST TILLAGE OPERATION, BUT IN NO CASE SHALL IT BE APPLIED MORE THAN THREE DAYS PRIOR TO SEEDING. FERTILIZER SHALL BE USED IMMEDIATELY AFTER DELIVERY OR STORED IN A MANNER THAT WILL NOT PERMIT IT TO HARDEN OR DESTROY ITS EFFECTIVENESS.

PERMANENT SEEDING

APPLY DOLEMATIC LIMESTONE AT THE RATE OF 2 TONS PER ACRE. IF HYDRATED LIME IS USED, FOLLOW RECOMMENDATION FROM SOIL TEST. COST OF THE TEST SHALL BE BORNE BY THE CONTRACTOR.

APPLY 10-10-10 FERTILIZER OUTSIDE OF NCDOT RIGHT-OF-WAY AT A RATE OF 1,000 POUNDS PER ACRE.

APPLY 10-20-20 FERTILIZER WITHIN NCDOT RIGHT-OF-WAY AT A RATE OF 500 POUNDS PER ACRE.

PROVIDE PERMANENT SEEDING IN ACCORDANCE WITH THE FOLLOWING SCHEDULE:

OUTSIDE OF NCDOT R/W
(JANUARY 1 - MARCH 31)
COMMON BERMUDA GRASS (UNHULLED) - 20 POUNDS PER ACRE
(APRIL 1 - JULY 31)
COMMON BERMUDA GRASS (HULLED) - 15 POUNDS PER ACRE
CENTIPEDE - 8 POUNDS PER ACRE
(AUGUST 1 - DECEMBER 31)
COMMON BERMUDA GRASS (UNHULLED) - 15 POUNDS PER ACRE
TALL FESCUE - 120 POUNDS PER ACRE
CENTIPEDE - 8 POUNDS PER ACRE
WITHIN NCDOT R/W
(JANUARY 1 - DECEMBER 31)
FESCUE - 50 POUNDS PER ACRE
PENSACOLA BAHIAGRASS - 25 POUNDS PER ACRE
CENTIPEDE - 5 POUNDS PER ACRE

4. CONTRACTOR SHALL FOLLOW THE SELF SITE INSPECTIONS AND REPORTING AS PER REQUIREMENTS (PER NCG010000). REFER TO INFORMATION AS SHOWN ON WITHIN THE NCG01 SELF-INSPECTION, RECORDKEEPING, AND REPORTING SHEET FOUND ON THE PROCEEDING PLAN SHEETS.
5. IN THE EVENT OF A CONFLICT BETWEEN THE REQUIREMENTS OF THE SEDIMENTATION POLLUTION CONTROL ACT, THE SUBMITTED PLAN AND/OR THE CONTRACT SPECIFICATIONS, THE MORE RESTRICTIVE REQUIREMENT SHALL PREVAIL. THE LAND-DISTURBING ACTIVITY SHALL BE CONDUCTED IN ACCORDANCE WITH THE APPROVED EROSION AND SEDIMENTATION CONTROL PLAN.
6. THE LATEST APPROVED EROSION AND SEDIMENTATION CONTROL PLAN WILL BE USED DURING PERIODIC UNANNOUNCED INSPECTIONS TO DETERMINE COMPLIANCE AND A COPY OF THE PLAN MUST BE ON FILE AT THE JOB SITE. IF IT IS DETERMINED THAT THE IMPLEMENTED PLAN IS INADEQUATE, THIS OFFICE MAY REQUIRE THE INSTALLATION OF ADDITIONAL MEASURES AND/OR THAT THE PLAN BE REVISED TO COMPLY WITH STATE LAW.
7. THE CERTIFICATE OF PLAN APPROVAL MUST BE POSTED AT THE PRIMARY ENTRANCE TO THE JOB SITE AND REMAIN UNTIL THE SITE IS PERMANENTLY STABILIZED.
8. A BUFFER ZONE, SUFFICIENT TO RESTRAIN VISIBLE SEDIMENTATION WITHIN THE FIRST 25% OF THE WIDTH CLOSEST TO THE LAND DISTURBANCE, MUST BE PROVIDED AND MAINTAINED BETWEEN THE LAND-DISTURBING ACTIVITY AND ANY ADJACENT PROPERTY OR WATERCOURSE.
9. IN ORDER TO COMPLY WITH THE INTENT OF THE ACT, THE SCHEDULING OF THE LAND-DISTURBING ACTIVITIES IS TO BE SUCH THAT BOTH THE AREA OF EXPOSURE AND THE TIME BETWEEN LAND DISTURBANCE AND PROVIDING GROUND COVER IS MINIMIZED.
10. UNLESS A TEMPORARY, MANUFACTURED, LINING MATERIAL HAS BEEN SPECIFIED, A CLEAN STRAW MULCH MUST BE APPLIED, AT A MINIMUM RATE OF 2 TONS/ACRE, TO ALL SEEDED AREAS. THE MULCH MUST COVER AT LEAST 75% OF THE SEEDED AREA AFTER IT IS EITHER TACKED WITH AN ACCEPTABLE TACKING MATERIAL, OR CRIMPED IN PLACE.
11. ADEQUATE AND APPROPRIATE MEASURES MUST BE PROPERLY INSTALLED DOWNSTREAM, WITHIN THE LIMITS OF DISTURBANCE, OF ANY LAND-DISTURBING ACTIVITY TO PREVENT SEDIMENT FROM LEAVING THE LIMITS OF DISTURBANCE, ENTERING EXISTING DRAINAGE SYSTEMS, IMPACTING AN ON-SITE NATURAL WATERCOURSE OR ADJOINING PROPERTY.
12. SILT FENCES, INCLUDING OUTLET SECTIONS, ARE NOT APPROPRIATE FOR AREAS OF CONCENTRATED FLOW SUCH AS SWALES OR DITCHES. PROVIDE ADEQUATE AND APPROPRIATE MEASURES FOR ALL CONSTRUCTION WITHIN AREAS OF CONCENTRATED FLOW.
13. ALL SLOPES AFFECTED DURING THE INSTALLATION/CLEANUP PROCESS MUST BE PROVIDED ON A GRADE THAT CAN BE RETAINED BY VEGETATIVE OR OTHER APPROPRIATE COVER.
14. INSTALL SILT FENCE OVER AND AROUND THE TOP OF EXISTING PIPES AND INLETS AT DISTURBED AREAS.
15. ALL DISTURBED AREAS SHALL BE GRADED TO MINIMIZE RUNOFF.
16. INSTALL SILT FENCE AROUND SPOIL PILES AND ALONG TRENCHES TO MINIMIZE SEDIMENT FROM ENTERING ROADSIDE DITCHES AND EXISTING DRAINAGE OUTLETS.
17. PROVIDE EROSION CONTROL MEASURES AROUND STOCK/WASTE PILES AND STAGING AREAS AS NEEDED OR AS DIRECTED BY ENGINEER.
18. PROTECT STORM PIPE INLETS FROM SEDIMENT RUNOFF FROM LAND DISTURBING ACTIVITIES WITH SILT FENCE, STONE CHECK DAM, OR ABC FILTER AS APPROPRIATE FOR SITE CONDITIONS.
19. REPLACE DISTURBED STORM PIPE OUTLET PROTECTION WITH EQUAL OR GREATER AMOUNT OF RIP-RAP WITHIN 15 DAYS OF DISTURBANCE -OR AS REQUIRED BY NCDENR-DWQ.
20. WHERE THE AREA AROUND AN OUTLET IS DISTURBED AND NO OUTLET PROTECTION EXISTS, CLASS "1" RIP-RAP SHALL BE PLACED AROUND PIPE OUTLET AS DIRECTED BY THE ENGINEER.
21. PROVIDE EROSION CONTROL MATTING WHERE INDICATED UNLESS DIRECTED OTHERWISE BY THE ENGINEER.
22. PROVIDE PERMANENT SEEDING IN ACCORDANCE WITH THE SEEDING SCHEDULE.
23. REPORT EROSION CONTROL DEFICIENCIES TO THE ENGINEER IMMEDIATELY.
24. ALL EROSION AND SEDIMENTATION CONTROL DEVICES SHALL REMAIN IN PLACE AND BE MAINTAINED BY THE CONTRACTOR UNTIL ALL SEEDING IS ESTABLISHED AND CONSTRUCTION AREAS HAVE BEEN STABILIZED.
25. CONTRACTOR SHALL INSPECT AND MAINTAIN AS NEEDED ALL EROSION CONTROL DEVICES ON A WEEKLY BASIS AND AFTER EACH MAJOR STORM EVENT. WHEN INSPECTION REVEALS THE TRAP TO BE REDUCED TO 50% OF DESIGN CAPACITY OR THE DEVICE TO BE DEFICIENT IN ITS INTENDED PURPOSE SUCH AS FABRIC DETERIORATION FOR SILT FENCES THE CONTRACTOR SHALL RESTORE THE DEVICE TO ITS ORIGINAL CONDITION.
26. CLOSEOUT YOUR CERTIFICATE OF COVERAGE (COC) WHICH WAS OBTAINED AT THE BEGINNING. SEE THE STAGE-1 NOTES AT THE START OF GRADING, FOR THE NOTE ABOUT THE eNOI (ELECTRONIC NOTICE OF INTENT) AND YOUR COC. AS THE FINANCIALLY RESPONSIBLE PARTY SHOWN ON THE FRO FORM SUBMITTED FOR THIS PROJECT, YOU THEN "CLOSE-OUT" THE COC AFTER COMPLETION OF YOUR LAND DISTURBING ACTIVITY. (THE eNOI FORM MAY BE ACCESSED AT deq.nc.gov/NCG01.)

GROUND STABILIZATION AND MATERIALS HANDLING PRACTICES FOR COMPLIANCE WITH THE NCG01 CONSTRUCTION GENERAL PERMIT

Implementing the details and specifications on this plan sheet will result in the construction activity being considered compliant with the Ground Stabilization and Materials Handling sections of the NCG01 Construction General Permit (Sections E and F, respectively). The permittee shall comply with the Erosion and Sediment Control plan approved by the delegated authority having jurisdiction. All details and specifications shown on this sheet may not apply depending on site conditions and the delegated authority having jurisdiction.

SECTION E: GROUND STABILIZATION

Required Ground Stabilization Timeframes		
Site Area Description	Stabilize within this many calendar days after ceasing land disturbance	Timeframe variations
(a) Perimeter dikes, swales, ditches, and perimeter slopes	7	None
(b) High Quality Water (HQW) Zones	7	None
(c) Slopes steeper than 3:1	7	If slopes are 10' or less in length and are not steeper than 2:1, 14 days are allowed
(d) Slopes 3:1 to 4:1	14	-7 days for slopes greater than 50' in length and with slopes steeper than 4:1 -7 days for perimeter dikes, swales, ditches, perimeter slopes and HQW Zones -10 days for Falls Lake Watershed
(e) Areas with slopes flatter than 4:1	14	-7 days for perimeter dikes, swales, ditches, perimeter slopes and HQW Zones -10 days for Falls Lake Watershed unless there is zero slope

Note: After the permanent cessation of construction activities, any areas with temporary ground stabilization shall be converted to permanent ground stabilization as soon as practicable but in no case longer than 90 calendar days after the last land disturbing activity. Temporary ground stabilization shall be maintained in a manner to render the surface stable against accelerated erosion until permanent ground stabilization is achieved.

GROUND STABILIZATION SPECIFICATION

Stabilize the ground sufficiently so that rain will not dislodge the soil. Use one of the techniques in the table below:

Temporary Stabilization	Permanent Stabilization
• Temporary grass seed covered with straw or other mulches and tackifiers • Hydroseeding • Rolled erosion control products with or without temporary grass seed • Appropriately applied straw or other mulch • Plastic sheeting	• Permanent grass seed covered with straw or other mulches and tackifiers • Geotextile fabrics such as permanent soil reinforcement matting • Hydroseeding • Shrubs or other permanent plantings covered with mulch • Uniform and evenly distributed ground cover sufficient to restrain erosion • Structural methods such as concrete, asphalt or retaining walls • Rolled erosion control products with grass seed

POLYACRYLAMIDES (PAMS) AND FLOCCULANTS

1. Select flocculants that are appropriate for the soils being exposed during construction, selecting from the *NC DWR List of Approved PAMS/Flocculants*.
2. Apply flocculants at or before the inlets to Erosion and Sediment Control Measures.
3. Apply flocculants at the concentrations specified in the *NC DWR List of Approved PAMS/Flocculants* and in accordance with the manufacturer's instructions.
4. Provide ponding area for containment of treated Stormwater before discharging offsite.
5. Store flocculants in leak-proof containers that are kept under storm-resistant cover or surrounded by secondary containment structures.

EQUIPMENT AND VEHICLE MAINTENANCE

1. Maintain vehicles and equipment to prevent discharge of fluids.
2. Provide drip pans under any stored equipment.
3. Identify leaks and repair as soon as feasible, or remove leaking equipment from the project.
4. Collect all spent fluids, store in separate containers and properly dispose as hazardous waste (recycle when possible).
5. Remove leaking vehicles and construction equipment from service until the problem has been corrected.
6. Bring used fuels, lubricants, coolants, hydraulic fluids and other petroleum products to a recycling or disposal center that handles these materials.

LITTER, BUILDING MATERIAL AND LAND CLEARING WASTE

1. Never bury or burn waste. Place litter and debris in approved waste containers.
2. Provide a sufficient number and size of waste containers (e.g dumpster, trash receptacle) on site to contain construction and domestic wastes.
3. Locate waste containers at least 50 feet away from storm drain inlets and surface waters unless no other alternatives are reasonably available.
4. Locate waste containers on areas that do not receive substantial amounts of runoff from upland areas and does not drain directly to a storm drain, stream or wetland.
5. Cover waste containers at the end of each workday and before storm events or provide secondary containment. Repair or replace damaged waste containers.
6. Anchor all lightweight items in waste containers during times of high winds.
7. Empty waste containers as needed to prevent overflow. Clean up immediately if containers overflow.
8. Dispose waste off-site at an approved disposal facility.
9. On business days, clean up and dispose of waste in designated waste containers.

PAINT AND OTHER LIQUID WASTE

1. Do not dump paint and other liquid waste into storm drains, streams or wetlands.
2. Locate paint washouts at least 50 feet away from storm drain inlets and surface waters unless no other alternatives are reasonably available.
3. Contain liquid wastes in a controlled area.
4. Containment must be labeled, sized and placed appropriately for the needs of site.
5. Prevent the discharge of soaps, solvents, detergents and other liquid wastes from construction sites.

PORTABLE TOILETS

1. Install portable toilets on level ground, at least 50 feet away from storm drains, streams or wetlands unless there is no alternative reasonably available. If 50 foot offset is not attainable, provide relocation of portable toilet behind silt fence or place on a gravel pad and surround with sand bags.
2. Provide staking or anchoring of portable toilets during periods of high winds or in high foot traffic areas.
3. Monitor portable toilets for leaking and properly dispose of any leaked material. Utilize a licensed sanitary waste hauler to remove leaking portable toilets and replace with properly operating unit.

EARTHEN STOCKPILE MANAGEMENT

1. Show stockpile locations on plans. Locate earthen-material stockpile areas at least 50 feet away from storm drain inlets, sediment basins, perimeter sediment controls and surface waters unless it can be shown no other alternatives are reasonably available.
2. Protect stockpile with silt fence installed along toe of slope with a minimum offset of five feet from the toe of stockpile.
3. Provide stable stone access point when feasible.
4. Stabilize stockpile within the timeframes provided on this sheet and in accordance with the approved plan and any additional requirements. Soil stabilization is defined as vegetative, physical or chemical coverage techniques that will restrain accelerated erosion on disturbed soils for temporary or permanent control needs.

NORTH CAROLINA *Environmental Quality*

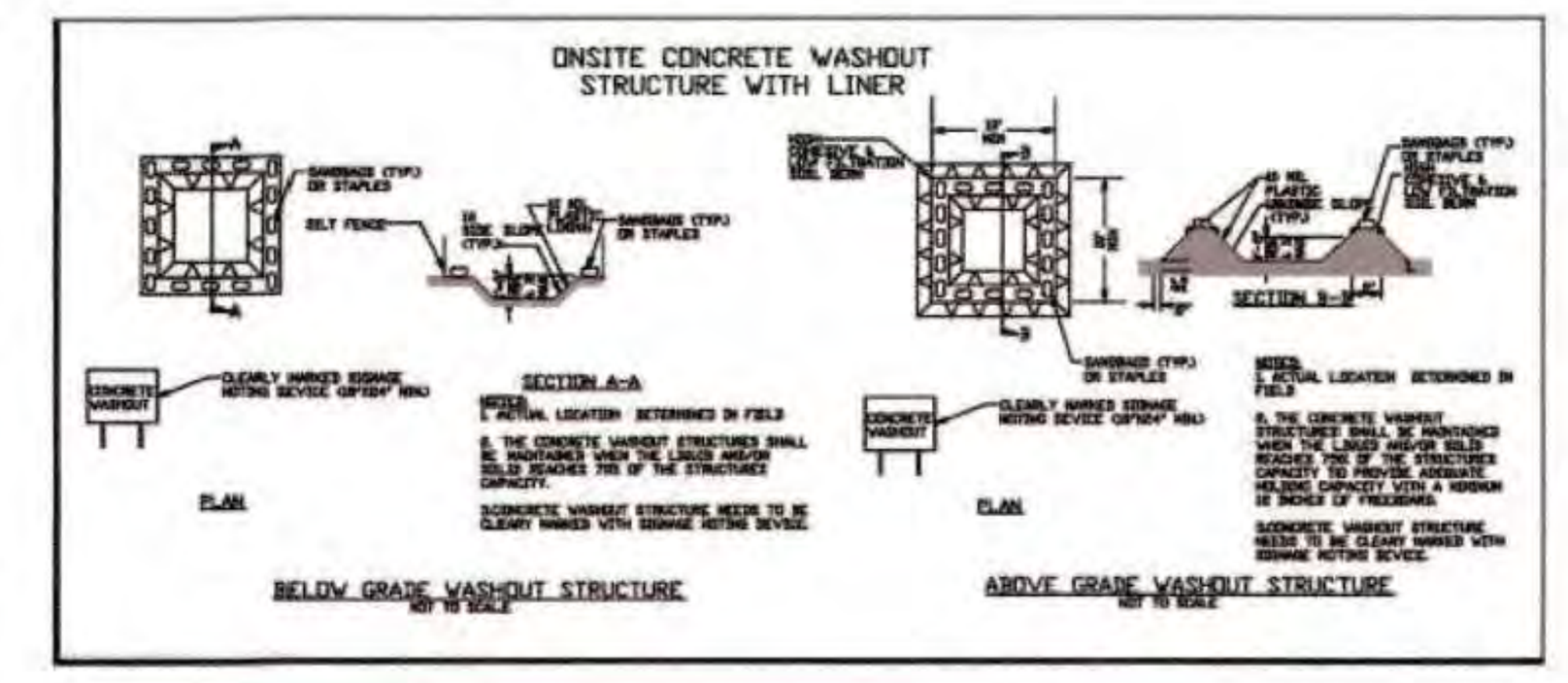

CONCRETE WASHOUTS

1. Do not discharge concrete or cement slurry from the site.
2. Dispose of, or recycle settled, hardened concrete residue in accordance with local and state solid waste regulations and at an approved facility.
3. Manage washout from mortar mixers in accordance with the above item and in addition place the mixer and associated materials on impervious barrier and within lot perimeter silt fence.
4. Install temporary concrete washouts per local requirements, where applicable. If an alternate method or product is to be used, contact your approval authority for review and approval. If local standard details are not available, use one of the two types of temporary concrete washouts provided on this detail.
5. Do not use concrete washouts for dewatering or storing defective curb or sidewalk sections. Stormwater accumulated within the washout may not be pumped into or discharged to the storm drain system or receiving surface waters. Liquid waste must be pumped out and removed from project.
6. Locate washouts at least 50 feet from storm drain inlets and surface waters unless it can be shown that no other alternatives are reasonably available. At a minimum, install protection of storm drain inlet(s) closest to the washout which could receive spills or overflow.
7. Locate washouts in an easily accessible area, on level ground and install a stone entrance pad in front of the washout. Additional controls may be required by the approving authority.
8. Install at least one sign directing concrete trucks to the washout within the project limits. Post signage on the washout itself to identify this location.
9. Remove leavings from the washout when at approximately 75% capacity to limit overflow events. Replace the tarp, sand bags or other temporary structural components when no longer functional. When utilizing alternative or proprietary products, follow manufacturer's instructions.
10. At the completion of the concrete work, remove remaining leavings and dispose of in an approved disposal facility. Fill pit, if applicable, and stabilize any disturbance caused by removal of washout.

HERBICIDES, PESTICIDES AND RODENTICIDES

1. Store and apply herbicides, pesticides and rodenticides in accordance with label restrictions.
2. Store herbicides, pesticides and rodenticides in their original containers with the label, which lists directions for use, ingredients and first aid steps in case of accidental poisoning.
3. Do not store herbicides, pesticides and rodenticides in areas where flooding is possible or where they may spill or leak into wells, stormwater drains, ground water or surface water. If a spill occurs, clean area immediately.
4. Do not stockpile these materials onsite.

HAZARDOUS AND TOXIC WASTE

1. Create designated hazardous waste collection areas on-site.
2. Place hazardous waste containers under cover or in secondary containment.
3. Do not store hazardous chemicals, drums or bagged materials directly on the ground.

NCG01 GROUND STABILIZATION AND MATERIALS HANDLING

EFFECTIVE: 04/01/19

PART III
SELF-INSPECTION, RECORDKEEPING AND REPORTING

SECTION A: SELF-INSPECTION

Self-inspections are required during normal business hours in accordance with the table below. When adverse weather or site conditions would cause the safety of the inspection personnel to be in jeopardy, the inspection may be delayed until the next business day on which it is safe to perforn the inspection. In addition, when a storm event of equal to or greater than 1.0 inch occurs outside of normal business hours, the self-inspection shall be performed upon the commencement of the next business day. Any time when inspections were delayed shall be noted in the Inspection Record.

Inspect	Frequency (during normal business hours)	Inspection records must include:
(1) Rain gauge maintained in good working order	Daily	Daily rainfall amounts. If no daily rain gauge observations are made during weekend or holiday periods, and no individual-day rainfall information is available, record the cumulative rain measurement for those unattended days (anc this will determine if a site inspection is needed). Days on which no rainfall occurred shall be recorded as "zero." The permittee may use another rain-monitoring device approved by the Division.
(2) E&SC Measures	At least once per 7 calendar days and within 24 hours of a rain event ≥ 1.0 inch in 24 hours	1. Identification of the measures inspected, 2. Date and time of the inspection, 3. Name of the person performing the inspection, 4. Indication of whether the measures were operating properly, 5. Description of maintenance needs for the measure, 6. Description, evidence, and date of corrective actions taken.
(3) Stormwater discharge outfalls (SDCs)	At least once per 7 calendar days and within 24 hours of a rain event ≥ 1.0 inch in 24 hours	1. Identification of the discharge outfalls inspected, 2. Date and time of the inspection, 3. Name of the person performing the inspection, 4. Evidence of indicators of stormwater pollution such as oil sheen, floating or suspended solids or discoloration, 5. Indication of visible sediment leaving the site, 6. Description, evidence, and date of corrective actions taken.
(4) Perimeter of site	At least once per 7 calendar days and within 24 hours of a rain event ≥ 1.0 inch in 24 hours	If visible sedimentation is found outside site limits, then a record of the following shall be made: 1. Actions taken to clean up or stabilize the sediment that has left the site limits, 2. Description, evidence, and date of corrective actions taken, and 3. An explanation as to the actions taken to control future releases.
(5) Streams or wetlands onsite or offsite (where accessible)	At least once per 7 calendar days and within 24 hours of a rain event ≥ 1.0 inch in 24 hours	If the stream or wetland has increased visible sedimentation or a stream has visible increased turbidity from the construction activity, then a record of the following shall be made: 1. Description, evidence and date of corrective actions taken, and 2. Records of the required reports to the appropriate Division Regional Office per Part III, Section C, Item (2)(a) of this permit.
(6) Ground stabilization measures	After each phase of grading	1. The phase of grading (installation of perimeter E&SC measures, clearing and grubbing, installation of storm drainage facilities, completion of all land-disturbing activity, construction or redevelopment, permanent ground cover). 2. Documentation that the required ground stabilization measures have been provided within the required timeframe or an assurance that they will be provided as soon as possible.

NOTE: The rain inspection resets the required 7 calendar day inspection requirement.

PART III
SELF-INSPECTION, RECORDKEEPING AND REPORTING

SECTION B: RECORDKEEPING

1. E&SC Plan Documentation

The approved E&SC plan as well as any approved deviation shall be kept on the site. The approved E&SC plan must be kept up-to-date throughout the coverage under this permit. The following items pertaining to the E&SC plan shall be kept on site and available for inspection at all times during normal business hours.

Item to Document	Documentation Requirements
(a) Each E&SC measure has been installed and does not significantly deviate from the locations, dimensions and relative elevations shown on the approved E&SC plan.	Initial and date each E&SC measure on a copy of the approved E&SC plan or complete, date and sign an inspection report that lists each E&SC measure shown on the approved E&SC plan. This documentation is required upon the initial installation of the E&SC measures or if the E&SC measures are modified after initial installation.
(b) A phase of grading has been completed.	Initial and date a copy of the approved E&SC plan or complete, date and sign an inspection report to indicate completion of the construction phase.
(c) Ground cover is located and installed in accordance with the approved E&SC plan.	Initial and date a copy of the approved E&SC plan or complete, date and sign an inspection report to indicate compliance with approved ground cover specifications.
(d) The maintenance and repair requirements for all E&SC measures have been performed.	Complete, date and sign an inspection report.
(e) Corrective actions have been taken to E&SC measures.	Initial and date a copy of the approved E&SC plan or complete, date and sign an inspection report to indicate the completion of the corrective action.

2. Additional Documentation to be Kept on Site

In addition to the E&SC plan documents above, the following items shall be kept on the site and available for inspectors at all times during normal business hours, unless the Division provides a site-specific exemption based on unique site conditions that make this requirement not practical:

(a) This General Permit as well as the Certificate of Coverage, after it is received.

(b) Records of inspections made during the previous twelve months. The permittee shall record the required observations on the Inspection Record Form provided by the Division or a similar inspection form that includes all the required elements. Use of electronically-available records in lieu of the required paper copies will be allowed if shown to provide equal access and utility as the hard-copy records.

3. Documentation to be Retained for Three Years

All data used to complete the e-NOI and all inspection records shall be maintained for a period of three years after project completion and made available upon request. [40 CFR 122.41]

PART III
SELF-INSPECTION, RECORDKEEPING AND REPORTING

SECTION C: REPORTING

1. Occurrences that Must be Reported

Permittees shall report the following occurrences:

(a) Visible sediment deposition in a stream or wetland.

(b) Oil spills if:
- They are 25 gallons or more,
- They are less than 25 gallons but cannot be cleaned up within 24 hours,
- They cause sheen on surface waters (regardless of volume), or
- They are within 100 feet of surface waters (regardless of volume).

(c) Releases of hazardous substances in excess of reportable quantities under Section 311 of the Clean Water Act (Ref: 40 CFR 110.3 and 40 CFR 117.3) or Section 102 of CERCLA (Ref: 40 CFR 302.4) or G.S. 143-215.85.

(d) Anticipated bypasses and unanticipated bypasses.

(e) Noncompliance with the conditions of this permit that may endanger health or the environment.

2. Reporting Timeframes and Other Requirements

After a permittee becomes aware of an occurrence that must be reported, he shall contact the appropriate Division regional office within the timeframes and in accordance with the other requirements listed below. Occurrences outside normal business hours may also be reported to the Department's Environmental Emergency Center personnel at (800) 858-0368.

Occurrence	Reporting Timeframes (After Discovery) and Other Requirements
(a) Visible sediment deposition in a stream or wetland	• ***Within 24 hours***, an oral or electronic notification. • ***Within 7 calendar days***, a report that contains a description of the sediment and actions taken to address the cause of the deposition. Division staff may waive the requirement for a written report on a case-by-case basis. • If the stream is named on the NC 303(d) list as impaired for sediment-related causes, the permittee may be required to perform additional monitoring, inspections or apply more stringent practices if staff determine that additional requirements are needed to assure compliance with the federal or state impaired-waters conditions.
(b) Oil spills and release of hazardous substances per Item 1(b)-(c) above	• ***Within 24 hours***, an oral or electronic notification. The notification shall include information about the date, time, nature, volume and location of the spill or release.
(c) Anticipated bypasses [40 CFR 122.41(m)(3)]	• ***A report at least ten days before the date of the bypass, if possible.*** The report shall include an evaluation of the anticipated quality and effect of the bypass.
(d) Unanticipated bypasses [40 CFR 122.41(m)(3)]	• ***Within 24 hours***, an oral or electronic notification. • ***Within 7 calendar days***, a report that includes an evaluation of the quality and effect of the bypass.
(e) Noncompliance with the conditions of this permit that may endanger health or the environment[40 CFR 122.41(l)(7)]	• ***Within 24 hours***, an oral or electronic notification. • ***Within 7 calendar days***, a report that contains a description of the noncompliance, and its causes; the period of noncompliance, including exact dates and times, and if the noncompliance has not been corrected, the anticipated time noncompliance is expected to continue; and steps taken or planned to reduce, eliminate, and prevent reoccurrence of the noncompliance. [40 CFR 122.41(l)(6). • Division staff may waive the requirement for a written report on a case-by-case basis.

NORTH CAROLINA *Environmental Quality*

PART II, SECTION G, ITEM (4)
DRAW DOWN OF SEDIMENT BASINS FOR MAINTENANCE OR CLOSE OUT

Sediment basins and traps that receive runoff from drainage areas of one acre or more shall use outlet structures that withdraw water from the surface when these devices need to be drawn down for maintenance or close out unless this is infeasible. The circumstances in which it is not feasible to withdraw water from the surface shall be rare (for example, times with extended cold weather). Non-surface withdrawals from sediment basins shall be allowed only when all of the following criteria have been met:

(a) The E&SC plan authority has been provided with documentation of the non-surface withdrawal and the specific time periods or conditions in which it will occur. The non-surface withdrawal shall not commence until the E&SC plan authority has approved these items,
(b) The non-surface withdrawal has been reported as an anticipated bypass in accordance with Part III, Section C, Item (2)(c) and (d) of this permit,
(c) Dewatering discharges are treated with controls to minimize discharges of pollutants from stormwater that is removed from the sediment basin. Examples of appropriate controls include properly sited, designed and maintained dewatering tanks, weir tanks, and filtration systems,
(d) Vegetated, upland areas of the sites or a properly designed stone pad is used to the extent feasible at the outlet of the dewatering treatment devices described in Item (c) above,
(e) Velocity dissipation devices such as check dams, sediment traps, and riprap are provided at the discharge points of all dewatering devices, and
(f) Sediment removed from the dewatering treatment devices described in Item (c) above is disposed of in a manner that does not cause deposition of sediment into waters of the United States.

NCG01 SELF-INSPECTION, RECORDKEEPING AND REPORTING

EFFECTIVE: 04/01/19

GENERAL NOTES

RAI Project #2023139

NC License: F-0334
Rivers & ASSOCIATES, INC.
riversandassociates.com Since 1918
Six Forks Place III Ste. 230
353 E. Six Forks Road
Raleigh, NC 27609
919.594.1626
Engineers
Planners
Surveyors
Landscape Architects

SCO ID # 23-26923-01A

NO	REVISION	DATE

SEAL

NORTH CAROLINA PROFESSIONAL ENGINEER SEAL 22508 BRIAN P. RUFF 10-18-24

JKF ARCHITECTURE
625 LYNNDALE CT., SUITE F, GREENVILLE, NC 27858 252-355-1068

CRAVEN COMMUNITY COLLEGE
CORPORATE TRAINING CENTER
CITY OF NEW BERN - CRAVEN COUNTY - NC

DRAWING TITLE

NPDES DETAILS & NOTES

SCALE: AS SHOWN	DRAWING NO: C6.1
DRAWN: MS, CS	
CHECKED: JSJ, BPR	
DATE: 9-1-2024	
PROJECT NO.: 2023139	

© COPYRIGHT, JKF ARCHITECTURE PC, JOHN K. FARKAS, AIA

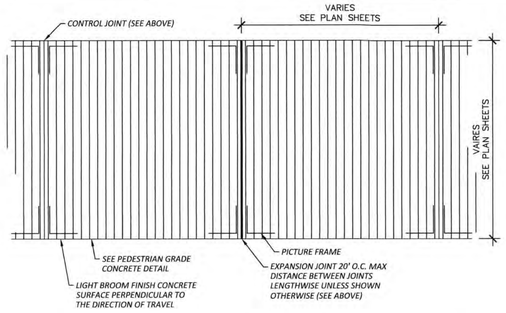

BROOM FINISH AND SCORING SINGLE DIRECTION

NTS

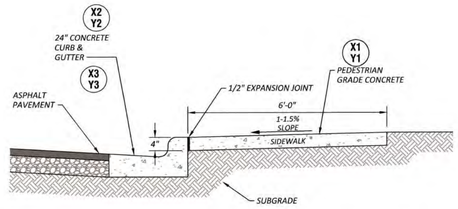

PARKING LOT PAVEMENT & SIDEWALK SECTION (TYP)

NTS

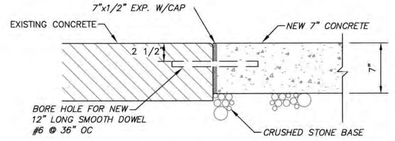

NEW AND EXISTING CONCRETE CONNECTION

NTS

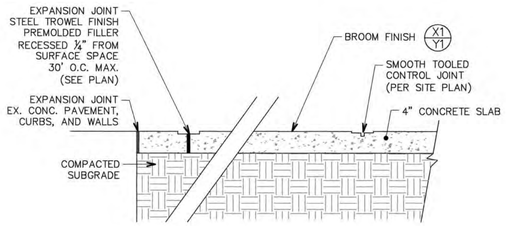

PEDESTRIAN GRADE CONCRETE

NTS

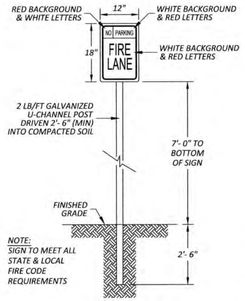

FIRE LANE SIGN

N.T.S.

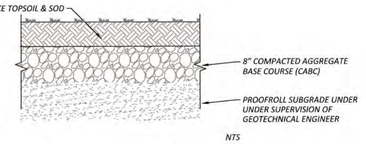

NTS

CONTRACTOR SHALL PROOF ROLL AND ESTABLISH AN UNYIELDING SUBGRADE IN ACCORDANCE WITH GEOTECHNICAL REPORT AND RECOMMENDATIONS. UNDERCUT, BACKFILL AND COMPACT AS NECESSARY TO ESTABLISH AN UNYIELDING SUBGRADE TO ACCOMODATE A 75,000 POUND FIRE APPARATUS VEHICLE, AS PER 2018 NCFC SECTION D102.1. (SEE DETAILED INSTRUCTIONS, BELOW.)

GRASS COVERED FIRE LANE SECTION

1. PROOF-ROLLING THE SUBGRADE -- The following is excerpt from Geotechnical Engineering Report by Terracon for the "Craven CC Corporate Training Center " dated 3/11/2024. Terracon, 314 Beacon Dr. Winterville NC 28590 Phone: (252) 353-1600, Carl Bonner PE Terracon Project No.72245003. (Repeated section of notes which are also included on Sheet C0.1 "Existing Conditions & Demolition Plan.")
2. Geotechnical Characterization -- The exploration encountered very loose to medium dense sand underlain by soft clay and loose sands. Groundwater is anticipated at depths ranging from 4 feet to 5 feet beneath existing grades.
3. Subgrade preparation -- After stripping and removing topsoil and once any areas of cut have been excavated to proposed subgrade elevation, the exposed subgrade soils in the building footprint [and under proposed fire truck access driveway] should be densified in place using a medium weight vibratory roller. The purpose of the vibratory rolling is to densify the exposed subgrade soils for floor slab [and driveway stone] support and to potentially improve the foundation bearing soils. The roller should make at least six passes across the site, with the second set of three passes perpendicular to the first set of three passes with intermittent vibration activated. If water is brought to the surface by the vibratory rolling, the operation should be discontinued until the water subsides. Vibratory rolling should be completed during dry weather. Static rolling and additional repairs should be anticipated for areas too wet for vibratory rolling.

3.1. After vibratory rolling, pore pressures should be allowed to dissipate for a minimum of 16 hours. After the waiting period, proofrolling should be performed on the exposed subgrade soils in areas to receive fill or at the subgrade elevation with a loaded, tandem-axle dump truck (15 to 20 ton total vehicle weight) or similar rubber-tired construction equipment. Proofrolling is recommended as a means of detecting areas of soft or unstable subgrade soils. The proofrolling should be performed during a period of dry weather to avoid degrading an otherwise suitable subgrade. The proofrolling operations should be observed by a representative of the geotechnical engineer. Subgrade soils that exhibit excessive rutting or deflection during proofrolling should be repaired as directed by the field representative. Typical repairs include overexcavation followed by replacement with either properly compacted fill or by a subgrade stabilization fabric in conjunction with a sand fill or crushed stone.

3.2. If subgrade soils are unsuitable, they will require removal and replacement; however, if they are unstable due to excessive moisture, the most economical solution for remediation may be to scarify, dry and recompact the material. This remediation is most effective during the typically hotter months of the year (May to October). If construction is performed during the cooler period of the year, the timeline for scarifying, drying, and recompacting typically increases considerably and may lead to alternative remediation solutions. These solutions can include overexcavation of some or all of the unstable material to be backfilled with either approved structural fill or geotextile and ABC stone. Potential undercutting can be reduced if the site preparation work is performed during a period of dry weather and if construction traffic is kept to a minimum on prepared subgrades. We recommend that the contractor submit a unit rate cost for undercutting as part of the bidding process.

4. The Groundwater Table

4.1. could affect overexcavation efforts, especially for overexcavation and replacement of lower strength soils. A temporary dewatering system consisting of sumps with pumps may be necessary to chieve the recommended depth of overexcavation depending on groundwater conditions at the time of construction.

4.2. As a minimum, excavations should be performed in accordance with OSHA 29 SFR, Part 1926, Subpart P, "Excavations" and its appendices, and in accordance with any applicable local and/or state regulations.

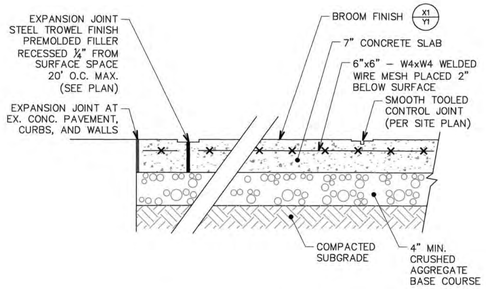

VEHICULAR GRADE CONCRETE

NTS

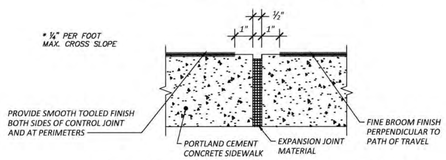

TYP. SIDEWALK EXPANSION JOINT

NTS

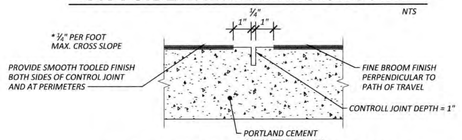

TYP. SIDEWALK CONTROL JOINT

NTS

GENERAL NOTES

RAI Project #2023139

Rivers & ASSOCIATES, INC.
riversandassociates.com Since 1918
NC License: F-0334
Six Forks Place III Ste. 230
353 E. Six Forks Road
Raleigh, NC 27609
919.594.1626
Engineers
Planners
Surveyors
Landscape Architects

SCO ID # 23-26923-01A

NO	REVISION	DATE

SEAL

NORTH CAROLINA PROFESSIONAL 22508 ENGINEER JOHN K. FARKAS, PE

JKF ARCHITECTURE
625 LYNNDALE CT., SUITE F, GREENVILLE, NC 27858 252-355-1068

CRAVEN COMMUNITY COLLEGE CORPORATE TRAINING CENTER

CITY OF NEW BERN - CRAVEN COUNTY - NC

DRAWING TITLE

SITE DETAILS

SCALE: AS SHOWN	DRAWING NO: C7.1
DRAWN: MS, CS	
CHECKED: JSJ, BPR	
DATE: 9-1-2024	
PROJECT NO.: 2023139	

© COPYRIGHT, JKF ARCHITECTURE P.C. JOHN K. FARKAS, AIA

R:\ LANDDEV\ JKF_ARCH-CCC_CORP_TRNG_CTR-2023139\CADD_DWGS\SHEETS\C7.1 SITE DETAILS.DWG - C7.1 SITE DETAILS - 10/10/2024 4:53:14 PM

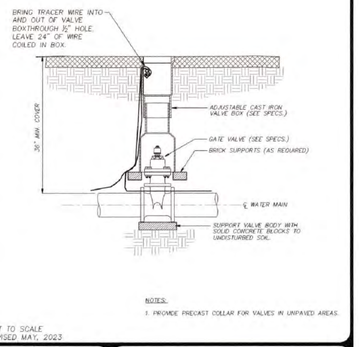

NOTES:
1. PROVIDE PRECAST COLLAR FOR VALVES IN UNPAVED AREAS.

NOT TO SCALE
REVISED MAY, 2023

NEW BERN
NORTH CAROLINA
Department of Water Resources
P.O. Box 1129, New Bern, NC 28563
252.639.7526 (FAX) 252.636.4103

TYPICAL VALVE AND VALVE BOX

STANDARD DRAWING No. W-4

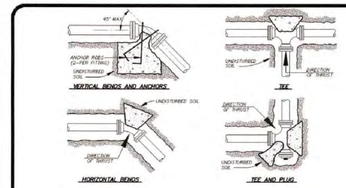

CONCRETE THRUST BLOCKING SCHEDULE						ANCHOR ROD SIZE
FITTING SIZE	BEARING AREA IN SQUARE FEET					FOR VERTICAL BENDS AND ANCHORS
	TEE/PLUG	90°	45°	22-1/2°	11-1/4°	
4"	1	2	1	1	1	1"
6"	3	3	2	1	1	
8"	4	6	3	2	1	1-1/4"
10"	7	9	5	3	2	
12"	9	12	7	4	2	
14"	12	17	9	5	3	1-1/2"
16"	16	22	12	6	3	
18"	20	27	15	8	4	
20"	24	34	18	10	5	2"
24"	34	48	26	14	7	
30"	53	76	41	21	11	2-1/2"
36"	77	108	59	30	15	
42"	104	147	80	41	20	3"
48"	136	192	104	53	27	
54"	172	243	132	67	34	3-1/2"
60"	212	300	163	83	42	

NOTES:
1. MINIMUM BEARING AREA (IN SQUARE FEET) AGAINST UNDISTURBED TRENCH WALL OF SAND.
2. AREAS SHOWN ARE FOR 150 PSI TEST PRESSURE. IF TEST PRESSURE IS OTHER THAN 150 PSI, ADJUST AREA OF REACTION BACKING IN DIRECT PROPORTION.
3. OTHER SOIL CONDITIONS:
   CONSOLIDATED SAND OR MARLPAN – MULTIPLY ABOVE BY 0.5
   GRAVEL OR HARD DRY CLAY – MULTIPLY ABOVE BY 0.7
   SOFT CLAY – MULTIPLY ABOVE BY 2.0
   NOTE: SECURE ALL FITTINGS WITH APPROVED HARNESS OR TIE ROD CLAMPS, WITH CONCRETE REACTION BACKING THE SAME AS LISTED FOR SAND CONDITIONS.

NOT TO SCALE
REVISED MAY, 2023

NEW BERN
NORTH CAROLINA
Department of Water Resources
P.O. Box 1129, New Bern, NC 28563
252.639.7526 (FAX) 252.636.4103

THRUST BLOCKING AND ANCHORING SCHEDULE

STANDARD DRAWING No. W-5

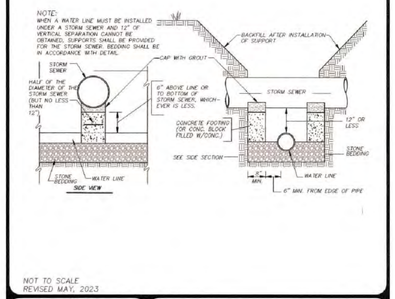

NOT TO SCALE
REVISED MAY, 2023

NEW BERN
NORTH CAROLINA
Department of Water Resources
P.O. Box 1129, New Bern, NC 28563
252.639.7526 (FAX) 252.636.4103

SHALLOW WATER CROSSING BELOW STORM SEWER

STANDARD DRAWING No. W-13

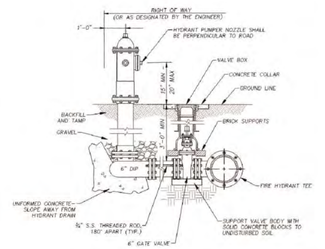

NOTES:
1. HYDRANT SHALL BE MUELLER MODEL NO. A421, OR AMERICAN-DARLING MODEL MK73-5, 4-½".
2. HYDRANT SHALL BE PROVIDED WITH STANDARD NEW BERN STORZ CONNECTION ON THE PUMPER NOZZLE.

NOT TO SCALE
REVISED MAY, 2023

NEW BERN
NORTH CAROLINA
Department of Water Resources
P.O. Box 1129, New Bern, NC 28563
252.639.7526 (FAX) 252.636.4103

TYPICAL FIRE HYDRANT ASSEMBLY

STANDARD DRAWING No. W-3

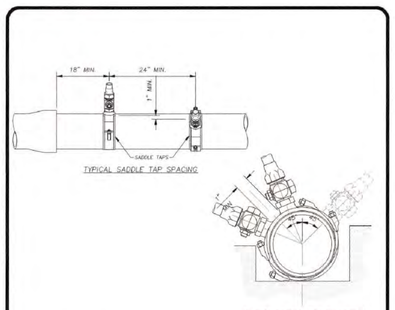

NOTES:
1. TAPS SHALL BE INSTALLED WITH A MINIMUM HORIZONTAL SEPARATION OF 24".
2. MULTIPLE TAPS ON THE SAME SIDE OF THE PIPE SHALL BE STAGGERED A MINIMUM OF 3' VERTICALLY TO PREVENT DAMAGE TO THE MAIN.
3. SERVICE SADDLES SHALL BE INSTALLED A MINIMUM OF 18" FROM PIPE JOINTS.

NOT TO SCALE
REVISED MAY, 2023

NEW BERN
NORTH CAROLINA
Department of Water Resources
P.O. Box 1129, New Bern, NC 28563
252.639.7526 (FAX) 252.636.4103

TYPICAL TAPPING SADDLE

STANDARD DRAWING No. W-12

PIPE RESTRAINT CHARTS

Horizontal & Vertical Up Bends

Pipe Size (inch)	Bend Angle	Pipeline Restraint Req. (feet)
4"	11.25	2
	22.5	5
	30	6
	45	10
	60	14
	90	19
6"	11.25	3
	22.5	7
	30	9
	45	14
	60	19
	90	26
8"	11.25	4
	22.5	9
	30	12
	45	18
	60	25
	90	33
10"	11.25	5
	22.5	10
	30	14
	45	21
	60	29
	90	39
12"	11.25	6
	22.5	12
	30	16
	45	25
	60	34
	90	46

Vertical Down Bends

Pipe Size (inch)	Bend Angle	Pipeline Restraint Req. (feet)
4"	11.25	4
	22.5	8
	30	11
	45	17
	60	24
	90	41
6"	11.25	6
	22.5	12
	30	16
	45	24
	60	34
	90	59
8"	11.25	7
	22.5	15
	30	20
	45	31
	60	44
	90	76
10"	11.25	9
	22.5	18
	30	25
	45	38
	60	53
	90	93
12"	11.25	11
	22.5	21
	30	29
	45	44
	60	62
	90	107

Tees, Reducers, Caps

Fitting Type	Size (inch)	Pipeline Restraint Req. (feet)
Tee	6	35
	8	52
	10	70
	12	101
Reducer	6x4	30
	8x6	35
	10x4	74
	10x6	58
	10x8	53
	12x4	93
	12x6	78
	12x8	71
Cap	4	43
	6	59
	8	76
	10	92
	12	107

APPENDIX - A

SIDEWALK STYLE FDC DETAIL

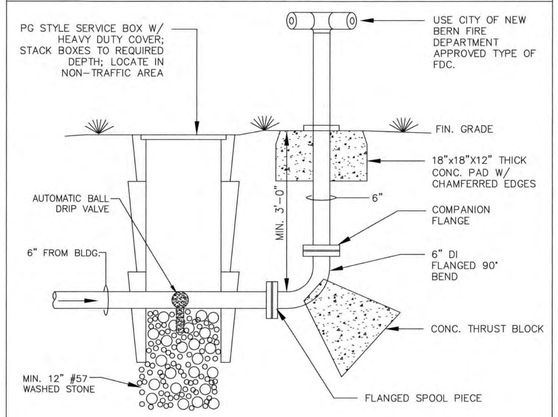

NOTE: CHECK VALVE FOR FDC PIPING IS LOCATED FIRE RISER ROOM #122.

POST INDICATOR VALVE DETAIL

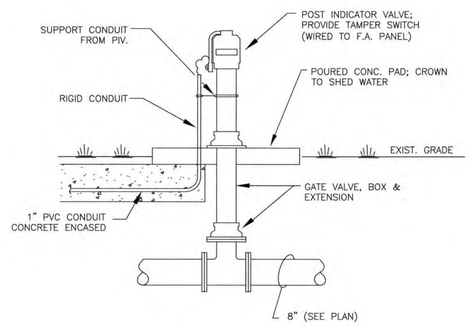

FINISHED GRADE
DETECTABLE WARNING TAPE INSTALLED 12"-18" ABOVE PIPE
BACKFILL
12 GAUGE SINGLE STRAND HDPE COATED COPPER TRACER WIRE TO BE INSTALLED ON ALL PIPE
12" MIN.
SELECT FILL MATERIAL EMBEDMENT
PIPE

NOTES:
1. BACKFILL SHALL BE PLACED AND COMPACTED IN 9" LIFTS.
2. THE CITY ENGINEER MAY REQUIRE GRANULAR EMBEDMENT AS NECESSARY BASED ON LOCAL SOIL CONDITIONS.
3. SELECT FILL SHALL BE USED FOR ALL BACKFILL IF LOCAL SOILS CONSIDERED TO BE UNSUITABLE.

NOT TO SCALE
REVISED MAY, 2023

NEW BERN
NORTH CAROLINA
Department of Water Resources
P.O. Box 1129, New Bern, NC 28563
252.639.7526 (FAX) 252.636.4103

BEDDING FOR WATER MAINS AND SEWER FORCE MAINS

STANDARD DRAWING No. S-10

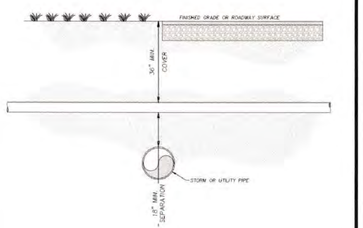

NOT TO SCALE
REVISED MAY, 2023

NEW BERN
NORTH CAROLINA
Department of Water Resources
P.O. Box 1129, New Bern, NC 28563
252.639.7526 (FAX) 252.636.4103

WATER/SEWER MAIN OVER STORM/UTILITY PIPE

STANDARD DRAWING No. S-17

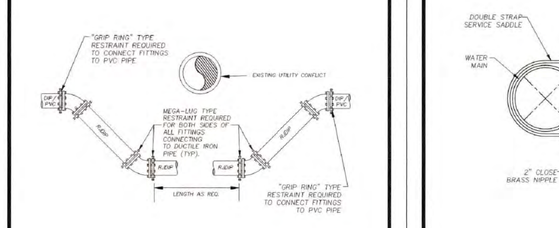

NOT TO SCALE
REVISED MAY, 2023

NEW BERN
NORTH CAROLINA
Department of Water Resources
P.O. Box 1129, New Bern, NC 28563
252.639.7526 (FAX) 252.636.4103

LOWERING WATER/SEWER MAIN UNDER A UTILITY CONFLICT

STANDARD DRAWING No. S-18

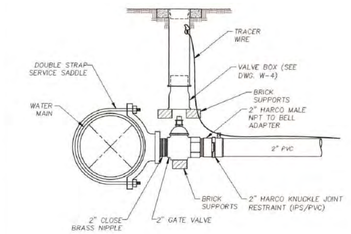

NOT TO SCALE
REVISED MAY, 2023

NEW BERN
NORTH CAROLINA
Department of Water Resources
P.O. Box 1129, New Bern, NC 28563
252.639.7526 (FAX) 252.636.4103

TYPICAL 2" WATER MAIN CONNECTION

STANDARD DRAWING No. W-14

GENERAL NOTES

RAI Project #2023139

NC License: F-0334

Rivers & ASSOCIATES, INC. Since 1918
riversandassociates.com

Six Forks Place III Ste. 230
353 E. Six Forks Road
Raleigh, NC 27609
919.594.1626

Engineers
Planners
Surveyors
Landscape Architects

SCO ID # 23-26923-01A

NO	REVISION	DATE

SEAL
NORTH CAROLINA PROFESSIONAL ENGINEER SEAL 22508 BRIAN P. RUFF
10-15-24

JKF ARCHITECTURE

425 LYNNDALE CT., SUITE F, GREENVILLE, NC 27858 252-355-1068

CRAVEN COMMUNITY COLLEGE
CORPORATE TRAINING CENTER
CITY OF NEW BERN - CRAVEN COUNTY - NC

DRAWING TITLE
WATER DETAILS

SCALE: AS SHOWN	DRAWING NO: C8.1
DRAWN: MS, CS	
CHECKED: JSJ, BPR	
DATE: 9-1-2024	
PROJECT NO.: 2023139	

© COPYRIGHT, JKF ARCHITECTURE PC. JOHN K. FARKAS, AIA

R:\LANDDEV.SKF_ARCH-CCC_CORP_TRNG_CTR-2023139\CADD_DWG\SHEETS\C8.1 WATER DETAILS.DWG - C8.1 WATER DETAILS - 9/19/2024 12:46:22 PM

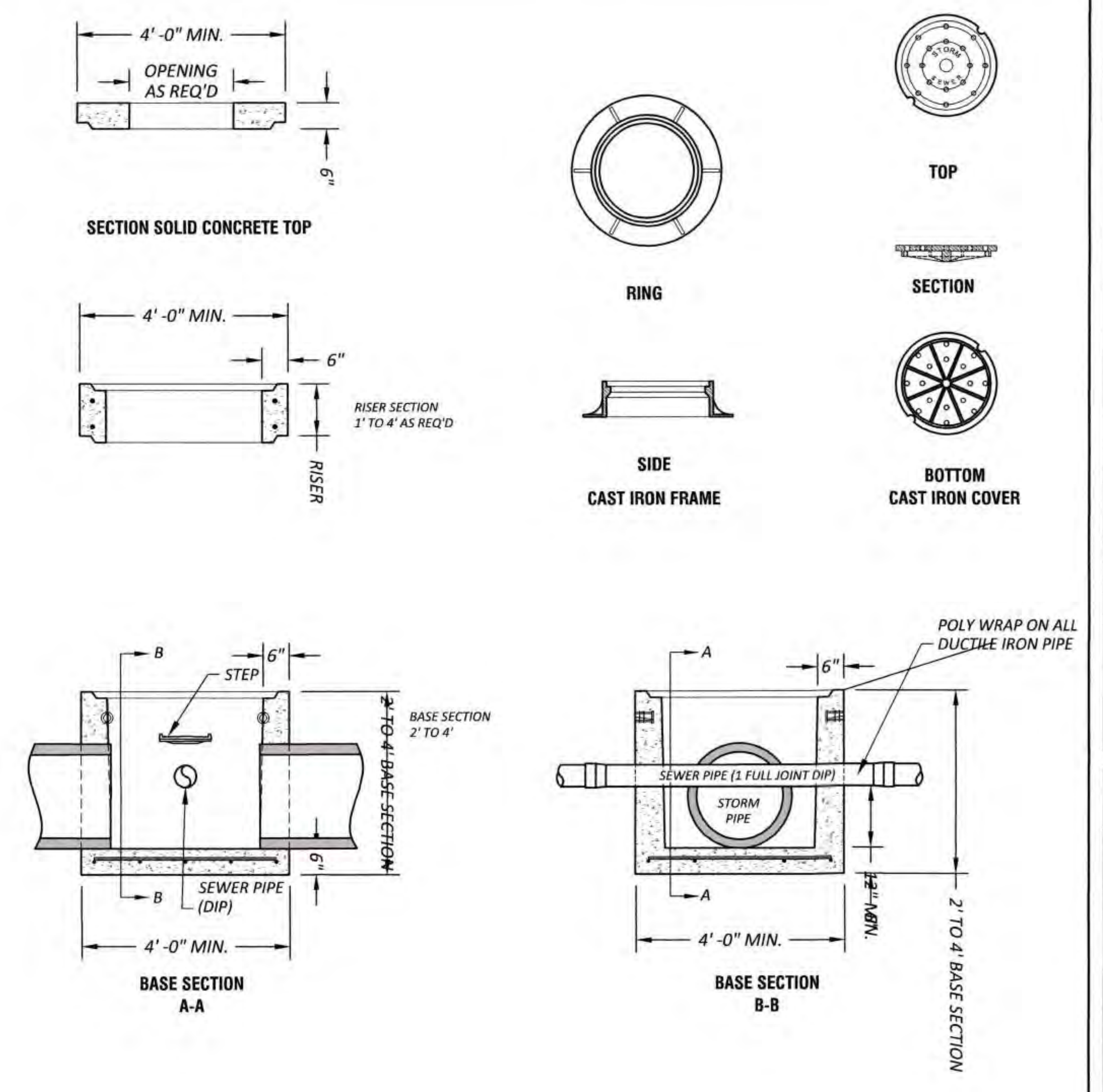

NOTE:
CONFLICT BOX SHALL ONLY BE UTILIZED WHERE SEWER DEPTHS ARE SHALLOW AND CONFLICT WITH STORM DRAINAGE CANNOT BE AVOIDED WITHOUT PUMPING. CONTRACTOR SHALL OBTAIN PRIOR APPROVAL FROM THE LOCAL AUTHORITY HAVING JURISDICTION PRIOR TO CONSTRUCTION OF BOX.

GENERAL NOTES:
1. CONCRETE SHALL BE 4000 PSI MINIMUM.
2. REINFORCING STEEL ASTM A-615 GRADE 60
3. STRUCTURES SHALL MEET NCDOT APPROVAL TO 10' DEPTH
4. ALL SOLID BOXES SHALL MEET H-20 LOADING TO A DEPTH OF 15'-0".
5. PRECAST BOXES SHALL MEET ALL NCDOT STANDARDS
6. ANY MODIFICATIONS TO ANY PRECAST BOX MAY NULLIFY H-20 LOADING.
7. ALL JOINTS TO BE SEALED WITH BUTYL RUBBER JOINT SEALANT CONFIRMING TO THE REQUIREMENTS OF ASTM C990, OR MORTAR AS PER NCDOT REQUIREMENTS.
8. SHALL BE REQUIRED ON BOXES OVER 3'-6" IN DEPTH. STEPS SHALL BE COPOLYMER POLYPROPOLENE PLASTIC AND SHALL MEET THE REQUIREMENTS OF ASTM C478.

CONFLICT/JUNCTION BOX DETAIL

N.T.S.
STRM-39

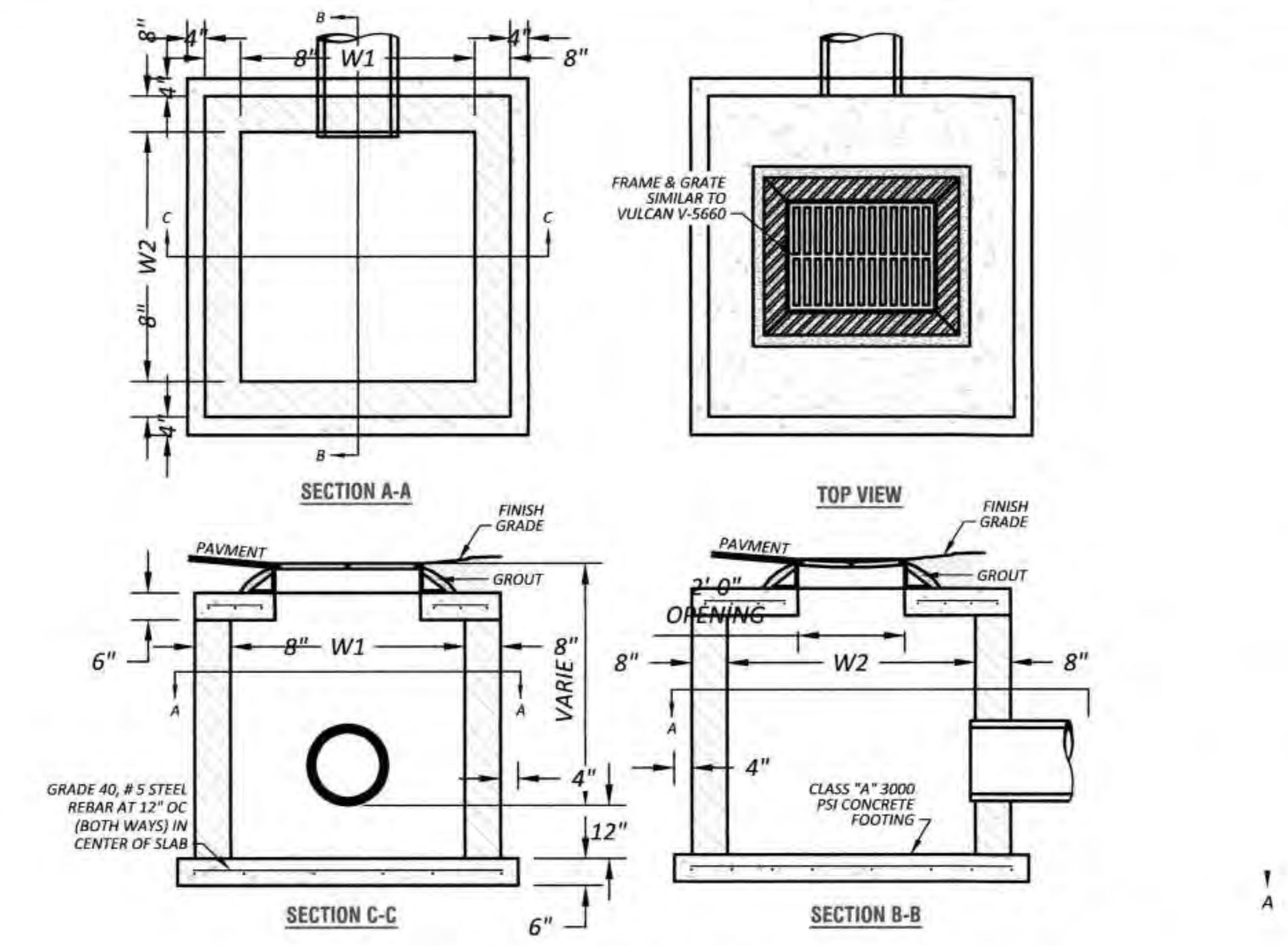

STANDARD DROP INLET

NTS

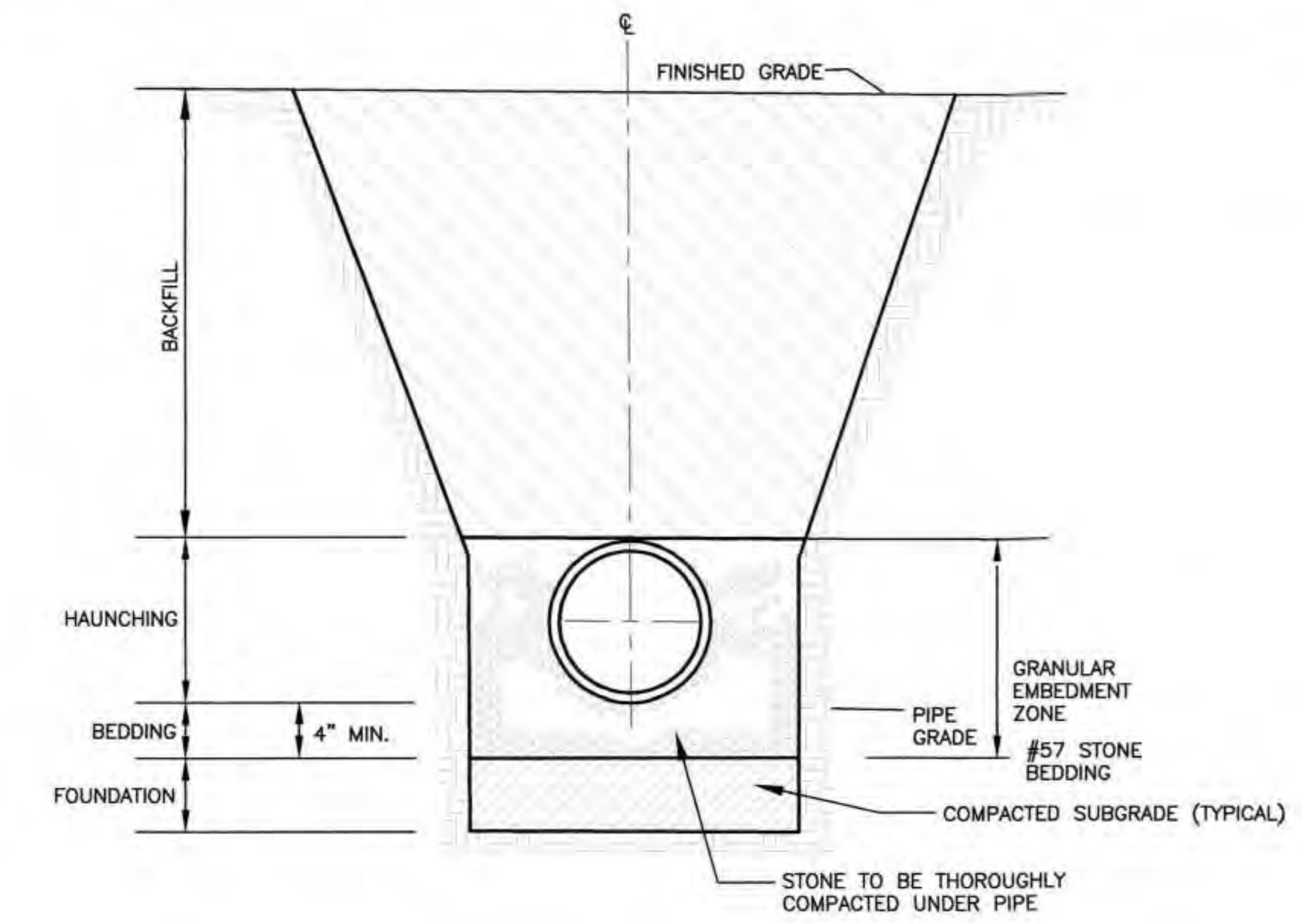

TRENCH SECTION FOR PVC SANITARY SEWER SERVICE (SCHEDULE 40)

NTS

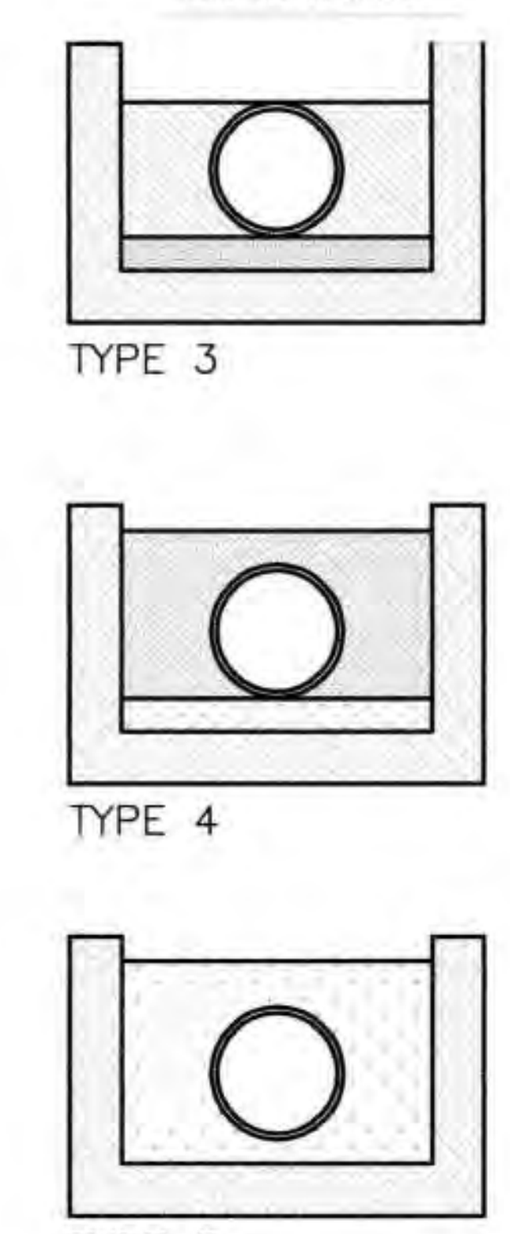

LAYING CONDITIONS	DESCRIPTION	PROJECT USE
TYPE 3	PIPE BEDDED IN 4" MININUM JOB EXCAVATED MATERIAL. BACKFILL LIGHTLY CONSOLIDATED TO TOP OF PIPE.	ALL DUCTILE IRON GRAVITY SEWER LINE.
TYPE 4	PIPE BEDDED IN SAND, GRANULAR MATERIAL OR GRADED GRAVEL TO THE DEPTH OF 1/8 PIPE DIAMETER, 4" MIN. JOB EXCAVATED MATERIAL COMPACTED TO 4" ABOVE TOP OF PIPE. (APPROX. 95% STANDARD PROCTOR, AASHTO T-99)	ALL PVC WATER LINE AND PVC FORCE MAIN.
TYPE 5	PIPE BEDDED TO ITS CENTERLINE IN COMPACTED GRANULAR MATERIAL 4" MIN. UNDER PIPE. COMPACTED GRANULAR OR SAND MATERIAL TO 4"ABOVE TOP OF PIPE. (APPROX. 95% STANDARD PROCTOR, AASHTO T-99)	ALL PVC GRAVITY SEWER LINE.

TYPICAL LAYING CONDITIONS

NTS

1899CGSL

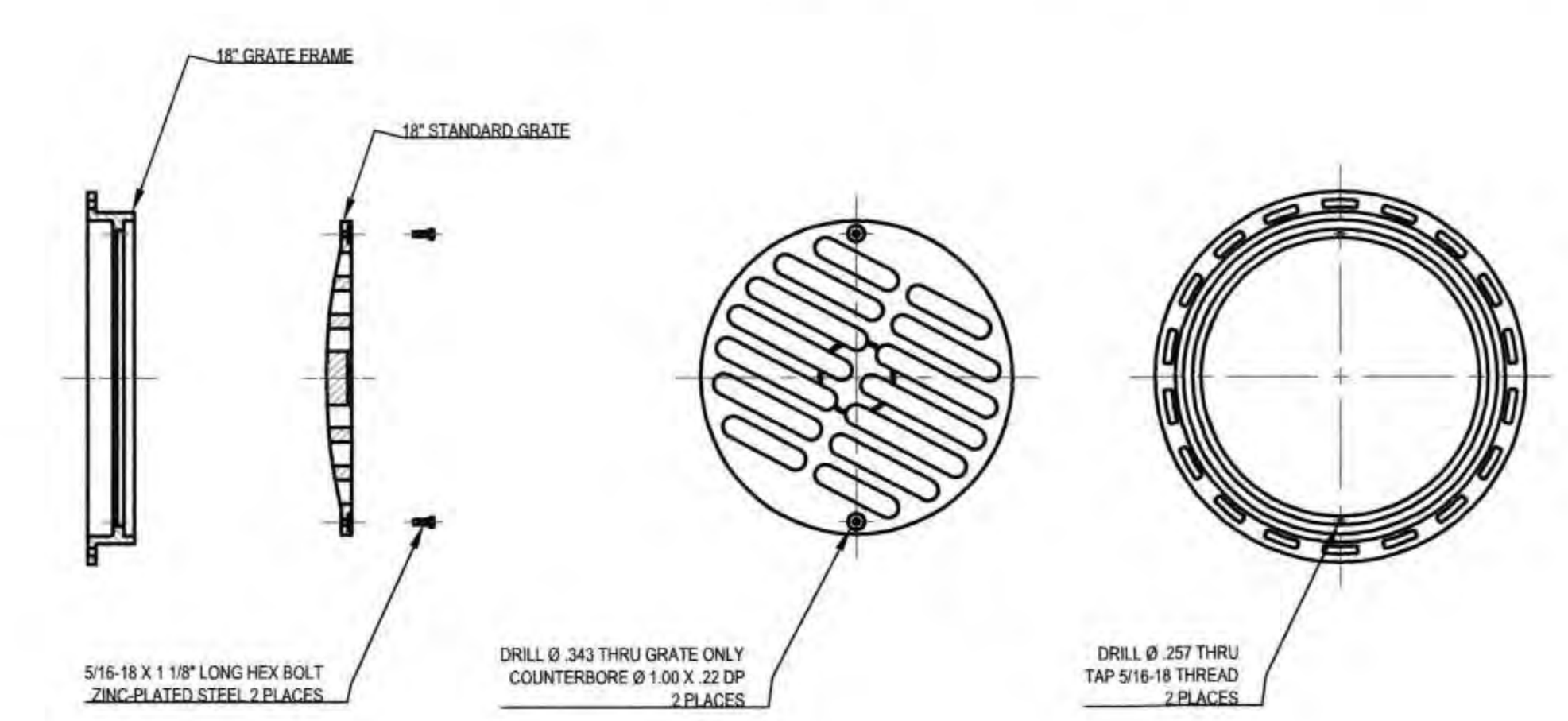

NOTE: LOCATION OF LOCKING DEVICE MAY VARY

THIS PRINT DISCLOSES SUBJECT MATTER IN WHICH NYLOPLAST HAS PROPRIETARY RIGHTS. THE RECEIPT OR POSSESSION OF THIS PRINT DOES NOT CONFER, TRANSFER, OR LICENSE THE USE OF THE DESIGN OR TECHNICAL INFORMATION SHOWN HEREIN REPRODUCTION OF THIS PRINT OR ANY INFORMATION CONTAINED HEREIN, OR MANUFACTURE OF ANY ARTICLE HEREFROM, FOR THE DISCLOSURE TO OTHERS IS FORBIDDEN, EXCEPT BY SPECIFIC WRITTEN PERMISSION FROM NYLOPLAST. ©2010 NYLOPLAST

DRAWN BY AWA | DATE 6-30-00 | APPD BY EBC | DATE 2-20-10 | DWG SIZE A | MATERIAL | PROJECT NO./NAME | SCALE 1:10 | SHEET 1 OF 1

Nyloplast — 3130 VERONA AVE, BUFORD, GA 30518, PHN (770) 932-2443, FAX (770) 932-2490, www.nyloplast-us.com

TITLE: 18 IN STANDARD LOCKING GRATE ASSEMBLY - TYPE C | DWG NO. 7001-110-029 | REV C

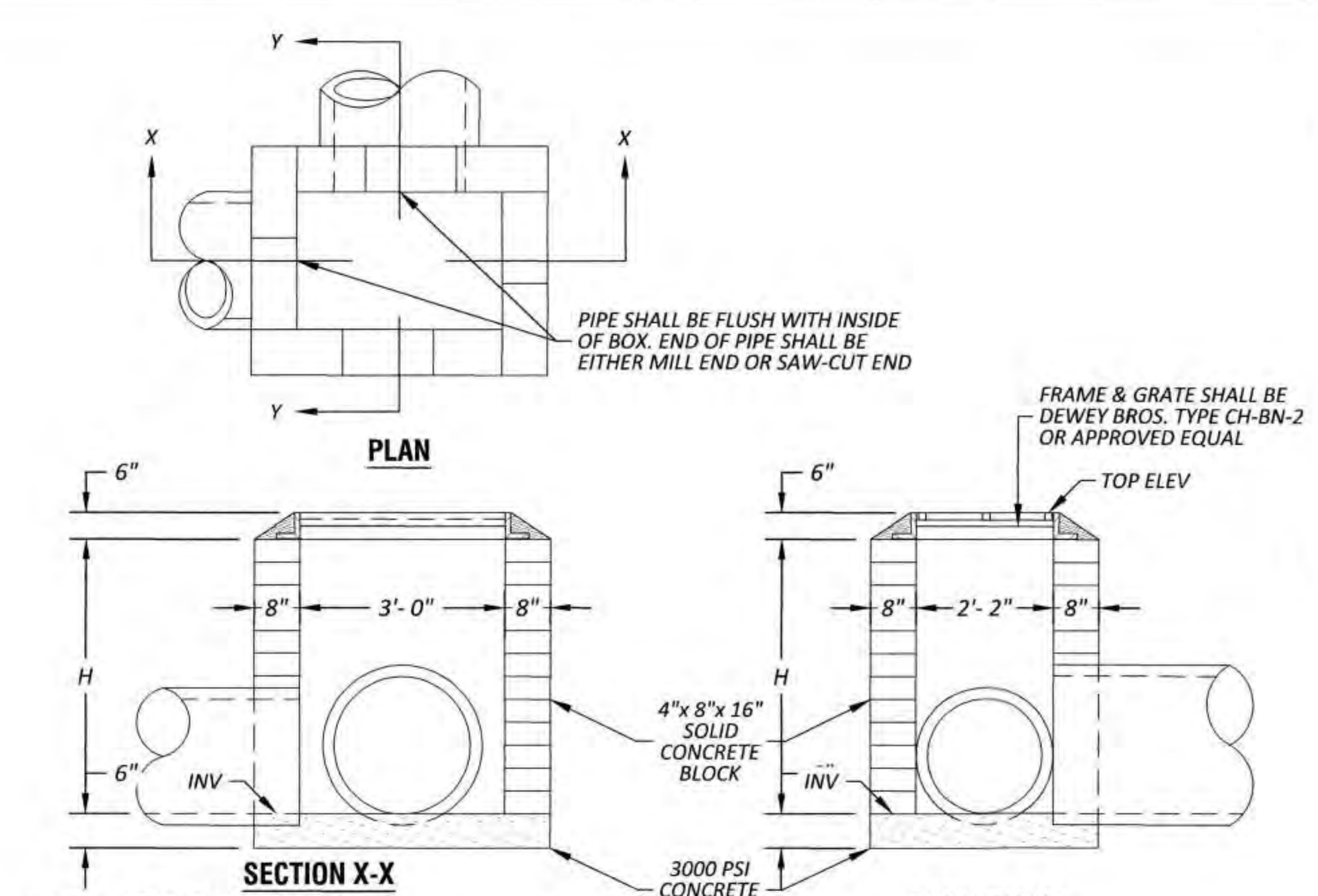

DROP INLET

N.T.S.
STRM-09

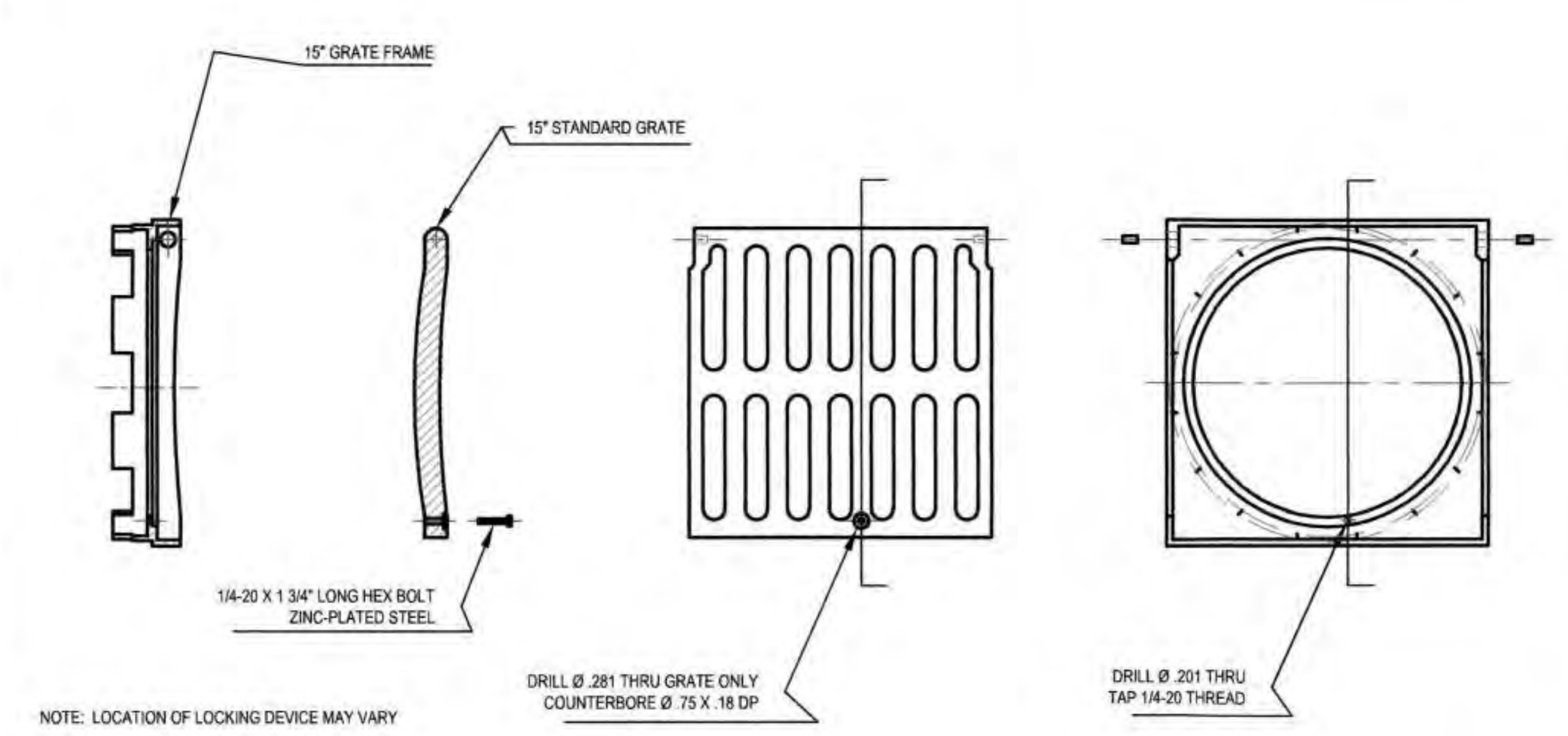

NOTE: LOCATION OF LOCKING DEVICE MAY VARY

15 IN STANDARD LOCKING GRATE ASSEMBLY

NTS

THIS PRINT DISCLOSES SUBJECT MATTER IN WHICH NYLOPLAST HAS PROPRIETARY RIGHTS. THE RECEIPT OR POSSESSION OF THIS PRINT DOES NOT CONFER, TRANSFER, OR LICENSE THE USE OF THE DESIGN OR TECHNICAL INFORMATION SHOWN HEREIN REPRODUCTION OF THIS PRINT OR ANY INFORMATION CONTAINED HEREIN, OR MANUFACTURE OF ANY ARTICLE HEREFROM, FOR THE DISCLOSURE TO OTHERS IS FORBIDDEN, EXCEPT BY SPECIFIC WRITTEN PERMISSION FROM NYLOPLAST. ©2010 NYLOPLAST

Nyloplast — 3130 VERONA AVE, BUFORD, GA 30518, PHN (770) 932-2443, FAX (770) 932-2490, www.nyloplast-us.com

TITLE | DWG NO. 7001-110-032 | REV C

NYLOPLAST DRAIN BASIN WITH ADD-A-BRANCH

PIPE SIZE	PART#	MIN. BASIN SIZE
4"	6004AG _	8"
6"	6006AG _	10"
8"	6008AG _	12"
10"	6010AG _	15"
12"	6012AG _	18"
15"	6015AG _	24"
4"	6004AG _ 30	SPEC. TO 30"
6"	6006AG _ 30	SPEC. TO 30"
8"	6008AG _ 30	SPEC. TO 30"
10"	6010AG _ 30	SPEC. TO 30"
12"	6012AG _ 30	SPEC. TO 30"
15"	6015AG _ 30	SPEC. TO 30"
18"	6018AG _ 30	30"

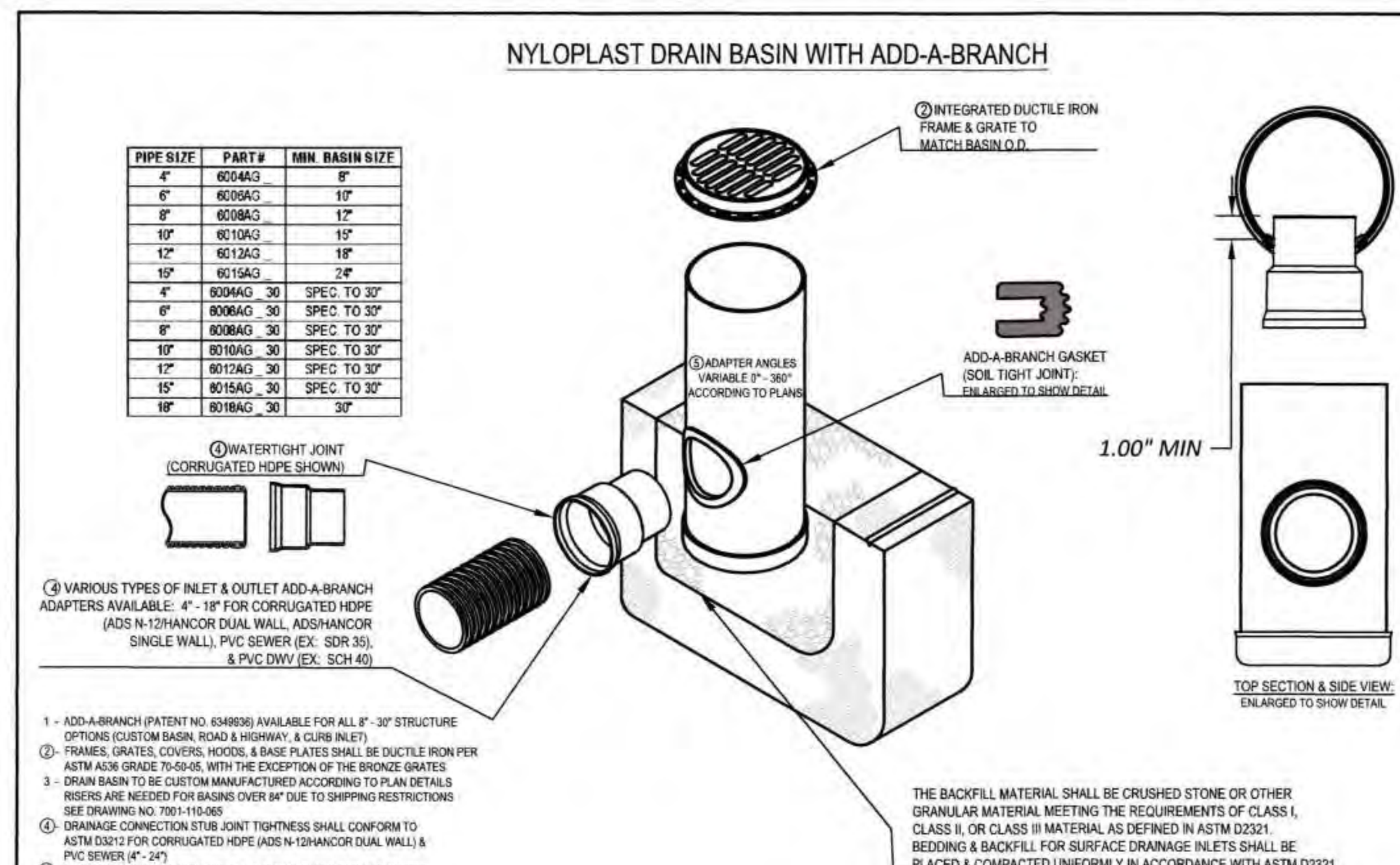

④ VARIOUS TYPES OF INLET & OUTLET ADD-A-BRANCH ADAPTERS AVAILABLE: 4" - 18" FOR CORRUGATED HDPE (ADS N-12/HANCOR DUAL WALL, ADS/HANCOR SINGLE WALL), PVC SEWER (EX: SDR 35), & PVC DWV (EX: SCH 40)

1 - ADD-A-BRANCH (PATENT NO. 6349936) AVAILABLE FOR ALL 8" - 30" STRUCTURE OPTIONS (CUSTOM BASIN, ROAD & HIGHWAY, & CURB INLET)
② - FRAMES, GRATES, COVERS, HOODS, & BASE PLATES SHALL BE DUCTILE IRON PER ASTM A536 GRADE 70-50-05, WITH THE EXCEPTION OF THE BRONZE GRATES
3 - DRAIN BASIN TO BE CUSTOM MANUFACTURED ACCORDING TO PLAN DETAILS RISERS ARE NEEDED FOR BASINS OVER 84" DUE TO SHIPPING RESTRICTIONS SEE DRAWING NO. 7001-110-065
④ - DRAINAGE CONNECTION STUB JOINT TIGHTNESS SHALL CONFORM TO ASTM D3212 FOR CORRUGATED HDPE (ADS N-12/HANCOR DUAL WALL) & PVC SEWER (4" - 24")
⑤ - ADD-A-BRANCH ADAPTERS CAN BE MOUNTED ON ANY ANGLE 0° TO 360° TO DETERMINE MINIMUM ANGLE BETWEEN ADD-A-BRANCH ADAPTERS SEE DRAWING NO. 0110-110-005

THE BACKFILL MATERIAL SHALL BE CRUSHED STONE OR OTHER GRANULAR MATERIAL MEETING THE REQUIREMENTS OF CLASS I, CLASS II, OR CLASS III MATERIAL AS DEFINED IN ASTM D2321. BEDDING & BACKFILL FOR SURFACE DRAINAGE INLETS SHALL BE PLACED & COMPACTED UNIFORMLY IN ACCORDANCE WITH ASTM D2321.

DRAIN BASIN WITH ADD-A-BRANCH QUICK SPEC INSTALLATION DETAIL

NTS

THIS PRINT DISCLOSES SUBJECT MATTER IN WHICH NYLOPLAST HAS PROPRIETARY RIGHTS. THE RECEIPT OR POSSESSION OF THIS PRINT DOES NOT CONFER, TRANSFER, OR LICENSE THE USE OF THE DESIGN OR TECHNICAL INFORMATION SHOWN HEREIN REPRODUCTION OF THIS PRINT OR ANY INFORMATION CONTAINED HEREIN, OR MANUFACTURE OF ANY ARTICLE HEREFROM, FOR THE DISCLOSURE TO OTHERS IS FORBIDDEN, EXCEPT BY SPECIFIC WRITTEN PERMISSION FROM NYLOPLAST. ©2009 NYLOPLAST

Nyloplast — 3130 VERONA AVE, BUFORD, GA 30518, PHN (770) 932-2443, FAX (770) 932-2490, www.nyloplast-us.com

TITLE | DWG NO. 0110-110-009 | REV E

GENERAL NOTES:
MORTAR JOINTS 1/2"± 1/8" THICK CLASS "AA" CONCRETE TO BE USED.
THE POURING OF FLOOR SLAB TO BE ACCOMPLISHED BY FORMING.
METAL STEPS TO BE PROVIDED 1'-2"± CENTERS. STEPS SHALL BE IN ACCORDANCE WITH CITY OF GREENVILLE STD. NO. 25.12.
SOLID CONCRETE BLOCK MAY BE USED IN LIEU OF CLAY BRICK.
JUMBO BRICK WILL BE PERMITTED.
FOR 8'-0" IN HEIGHT OR LESS USE 8" WALL. OVER 8'-0" IN HEIGHT USE 12" WALL TO 6'-0" FROM TOP OF WALL, AND 8" WALL FOR THE REMAINING 6'-0".
LEAVE WEEP HOLES AS DIRECTED BY THE ENGINEER.

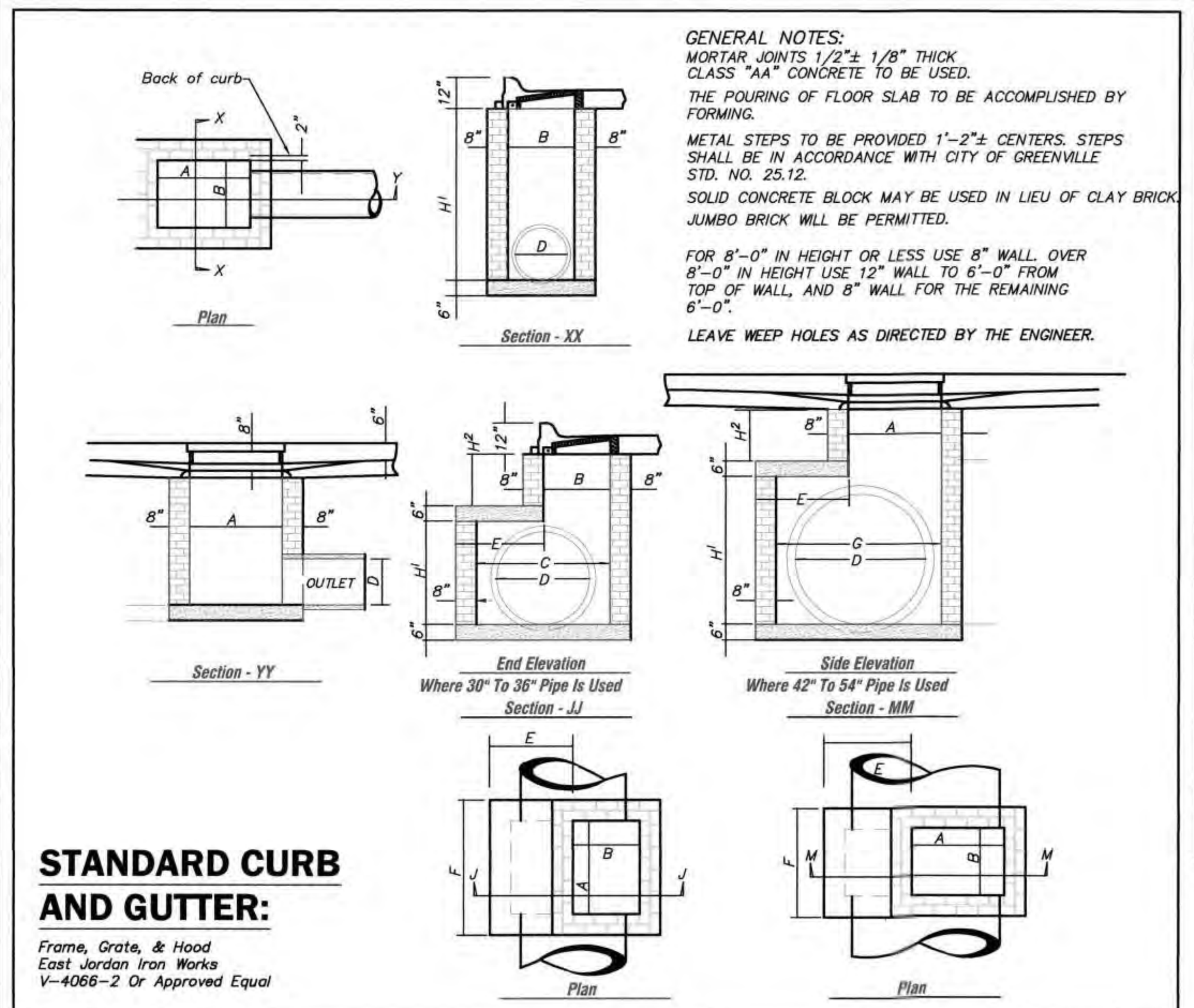

STANDARD CURB AND GUTTER:

Frame, Grate, & Hood
East Jordan Iron Works
V-4066-2 Or Approved Equal

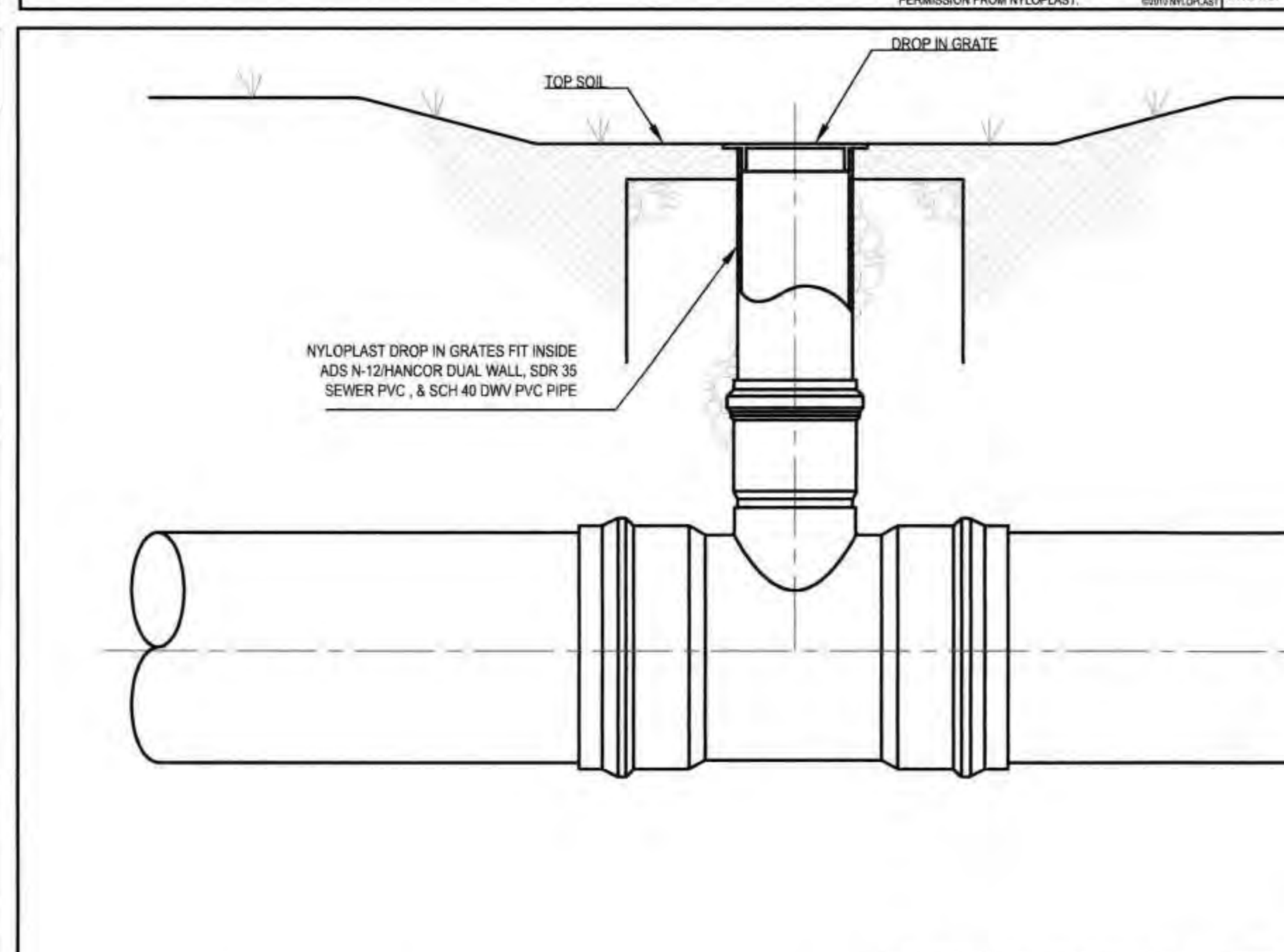

0601DI
0801DI
1001DI
1201DI
1501DI
1801DI
2401DI

6 IN - 24 IN DROP IN GRATE INSTALLATION

NTS

THIS PRINT DISCLOSES SUBJECT MATTER IN WHICH NYLOPLAST HAS PROPRIETARY RIGHTS. THE RECEIPT OR POSSESSION OF THIS PRINT DOES NOT CONFER, TRANSFER, OR LICENSE THE USE OF THE DESIGN OR TECHNICAL INFORMATION SHOWN HEREIN REPRODUCTION OF THIS PRINT OR ANY INFORMATION CONTAINED HEREIN, OR MANUFACTURE OF ANY ARTICLE HEREFROM, FOR THE DISCLOSURE TO OTHERS IS FORBIDDEN, EXCEPT BY SPECIFIC WRITTEN PERMISSION FROM NYLOPLAST. ©2010 NYLOPLAST

Nyloplast — 3130 VERONA AVE, BUFORD, GA 30518, PHN (770) 932-2443, FAX (770) 932-2490, www.nyloplast-us.com

TITLE: 6 IN - 24 IN DROP IN GRATE INSTALLATION | DWG NO. 7001-110-017 | REV E

RAI Project #2023011

Rivers & ASSOCIATES, INC. Since 1918 — NC License: F-0334
riversandassociates.com
Six Forks Place III Ste. 230
353 E. Six Forks Road
Raleigh, NC 27609
919.594.1626
Engineers
Planners
Surveyors
Landscape Architects

GENERAL NOTES

RAI Project #2023139

Rivers & ASSOCIATES, INC. Since 1918 — NC License: F-0334
riversandassociates.com
Six Forks Place III Ste. 230
353 E. Six Forks Road
Raleigh, NC 27609
919.594.1626
Engineers
Planners
Surveyors
Landscape Architects

SCO ID # 23-26923-01A

NO	REVISION	DATE

SEAL

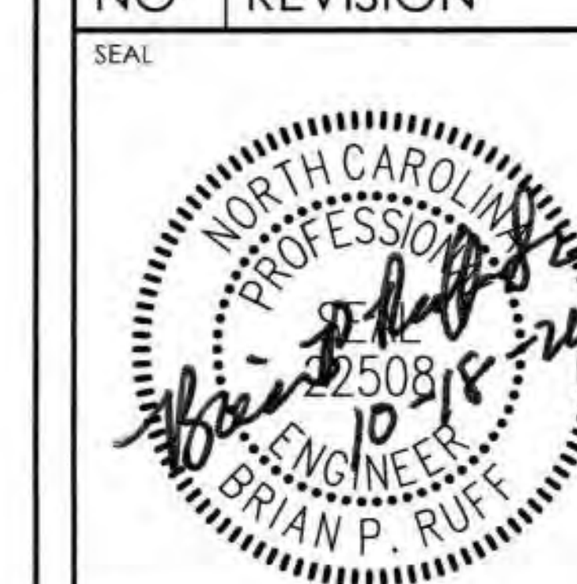

JKF ARCHITECTURE
625 LYNNDALE CT., SUITE F, GREENVILLE, NC 27858 252-355-1068

CRAVEN COMMUNITY COLLEGE CORPORATE TRAINING CENTER
CITY OF NEW BERN - CRAVEN COUNTY - NC

DRAWING TITLE
GRADING & DRAINAGE DETAILS

SCALE	AS SHOWN
DRAWN	MS, CS
CHECKED	JSJ, BPR
DATE	9-1-2024
PROJECT NO.	2023139
DRAWING NO	C10.1

© COPYRIGHT, JKF ARCHITECTURE PC, JOHN K. FARKAS, AIA

R:\LANDDEV\JKF_ARCH-CCC_CORP_TRNG_CTR-2023139\CADD_DWG\SHEETS\C10.1 STORM DETAILS.DWG - C 10.1 DRAINAGE DETAILS - 8/29/2024 2:16:13 PM

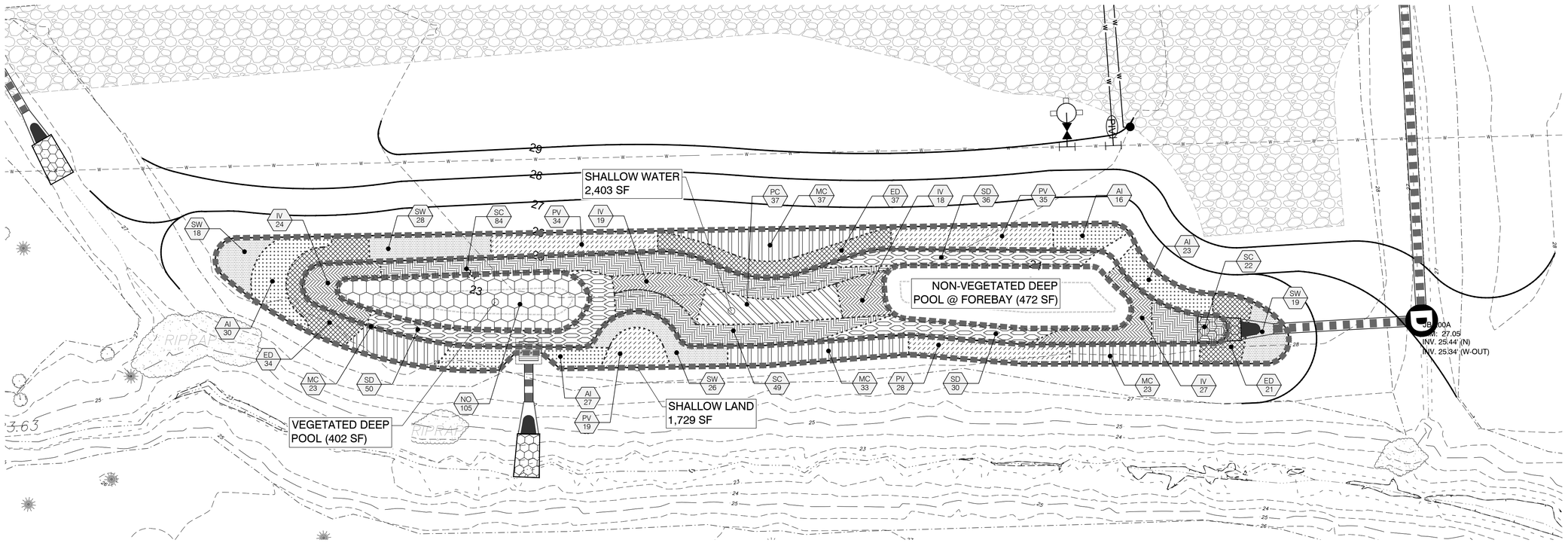

PLANT SCHEDULE

SYMBOL	CODE	BOTANICAL / COMMON NAME	CONTAINER	SPACING	SPACING	QTY	AREA
DEEP ZONE PLANTING							
	NO	Nymphaea odorata / White Water Lily	1 gal	24" O.C.	24" o.c.	105	402 sf
SHALLOW WATER PLANTINGS							
	IV	Iris virginica / Blue Flag Iris	1 gal	24" O.C.	24" o.c.	88	336 sf
	PC	Pontederia cordata / Pickerelweed	1 gal	24" O.C.	24" o.c.	37	140 sf
	SD	Sagittaria lancifolia / Bulltongue arrowhead	1 gal	24" O.C.	24" o.c.	116	444 sf
	SC	Saururus cernuus / Lizard's Tail	1 gal	24" O.C.	24" o.c.	155	593 sf
TEMPORARY INUNDATION ZONE PLANTINGS							
	AI	Asclepias incarnata / Swamp Milkweed	1 gal	24" O.C.	24" o.c.	96	313 sf
	ED	Eutrochium dubium / Coastal Joe Pye Weed	1 gal	24" O.C.	24" o.c.	92	345 sf
	MC	Muhlenbergia capillaris / Purple Muhly	1 gal	24" O.C.	24" o.c.	116	564 sf
	PV	Panicum virgatum / Switch Grass	1 gal	24" O.C.	24" o.c.	116	446 sf
	SW	Solidago rugosa / Goldenrod	1 gal	24" O.C.	24" o.c.	91	253 sf

NOTES:

1. **MAXIMUM SHALLOW LAND DEPTH (TEMPORARY POOL) SHALL BE ONE (1.25) FOOT.**
2. **THE WETLAND MUST BE STABILIZED WITHIN 14 DAYS OF CONSTRUCTION.**
3. **CATTAILS ARE NOT TO BE PLANTED.**
4. **SOD OR HYDROSEED WITH NON-CLUMPING TURFGRASS SHALL BE INSTALLED ON THE BANKS, TOP OF BERM, AND BERM SLOPES OF THE WETLAND**

WETLAND PLANTING NOTES:

1. ALL HERBACEOUS PLANTS WITHIN THE WETLAND PROPER (SHALLOW WATER AND SHALLOW LAND ZONES) SHALL BE INSTALLED BETWEEN MARCH 15 AND JULY 31.
2. UNLESS OTHERWISE DESIGNATED, PLANTS SHOULD BE INSTALLED AS LARGE DRIFTS (I.E., MASSES OF A SINGLE SPECIES) WITHIN THEIR RESPECTIVE PLANTING AREAS.
3. INSTALL A SLOW RELEASE FERTILIZER TABLET NEXT TO EACH PLANT WITHIN THE WETLAND PROPER. FOR HERBACEOUS SPECIES USE AG SAFE AQUATIC-TABS 20-10-5, 90 DAY CONTINUOUS FEEDING, 5 GRAMS, OR APPROVED EQUIVALENT. FOR TREES AND SHRUBS USE AGRIFROM 20-10-5 PLUS MINORS PLANTING TABLETS, 2 YEAR SLOW RELEASE OR APPROVED EQUIVALENT.
4. ALL PLANTS SHALL BE DIRECTLY DESCENDED FROM INDIVIDUALS GROWING WILD WITHIN 200 MILES OF THE PROJECT SITE. IF SUITABLE STOCK CANNOT BE OBTAINED, PLANTS OF OTHER GENETIC PROVENANCES MAY BE UTILIZED WITH THE APPROVAL OF THE OWNER OR OWNERS REPRESENTATIVE.
5. PLANT MATERIAL SHOULD CONFORM TO AMERICAN STANDARD NURSERY STOCK, PUBLISHED BY THE AMERICAN ASSOCIATION OF NURSERYMEN. (SEE PLANT LIST AND WETLAND PLANTING NOTES 6, 7, 8A, 8B & 8C)
6. ALL PLANT MATERIAL TO BE CONTAINER GROWN PLANTS OF AT LEAST 4.0 CUBIC INCHES CAPACITY.
7. A MINIMUM OF TEN (10) DIFFERENT SPECIES, TOTAL OF WHICH FIVE (5) ARE EMERGENT SPECIES WITH NO MORE THAN 30% OF A SINGLE SPECIES.

8A. PLANTS FOR PERMANENT SHALLOW WATER (3"-6" DEEP).
PLANTS SHOULD BE OF EACH SPECIES AND PLANTED IN A NATURAL FLOWING ARRANGEMENT PER PLANTING PLAN.
- A.IRIS VIRGINICA (BLUE FLAG IRIS)
- B.PONTEDERIA CORDATA (PICKERELWEED)
- C.SAGITTARIA LATIFOLIA (DUCK POTATO)
- D.SAURURUS CERNUUS (LIZARD'S TAIL)

SHALLOW WATER SURFACE AREA: 2,403 SF
TOTAL NUMBER OF PLANTS SPACED AT 24" O.C: 396 (SEE PLANT SCHEDULE)

8B. PLANTS FOR SHALLOW LAND < 3" DEEP TO TEMPORARY POOL ELEVATION.
PLANTS SHOULD BE OF EACH SPECIES AND PLANTED IN A NATURAL FLOWING ARRANGEMENT PER PLANTING PLAN.
- A. ASCLEPIAS INCARNATA (SWAMP MILKWEED)
- B. EUTROCHIUM DUBIUM (COASTAL PLAIN JOE PYE WEED)
- C. MUHLENBERGIA CAPILLARIS (PINK MUHLY GRASS)
- D. PANICUM VIRGATUM (SWITCHGRASS)
- E. SOLIDAGO RUGOSA (GOLDENROD)

SHALLOW LAND SURFACE AREA: 1,729 SF
TOTAL NUMBER OF PLANTS SPACED AT 24" O.C.: 511 (SEE PLANT SCHEDULE)

8C. PLANTS FOR DEEP POOL, 18" - 36".
- A. NYMPHAEA ODORATA (FRAGRANT WATER LILY)

DEEP POOL SURFACE AREA: 402 SF
TOTAL NUMBER OF PLANTS SPACED AT 24" O.C.: 105 (SEE PLANT SCHEDULE)

NOTE:

PLACE MIN. 4 INCHES OF QUALITY TOPSOIL TO THE SHALLOW LAND AND SHALLOW WATER REGIONS.

THE PROJECT CAN UTILIZE THE EXISTING TOPSOIL BY STOCK PILING ON SITE AND AMENDING SOIL AS NECESSARY BASED ON SOIL ANALYSIS RESULTS PER SECTION 6.5.1 OF THE BMP MANUAL.

NOTE:

1) ALL ROOF DRAINS SHALL BE DIRECTED TO THE STORM DRAIN SYSTEM.

NCGRID NAD83/2011

CALL BEFORE YOU DIG!
WWW.NC811.ORG
N.C. ONE-CALL CENTER
IT'S THE LAW!

10' 0 5' 10'
SCALE 1 inch = **10** ft

GENERAL NOTES

RAI Project #2023139

Rivers & ASSOCIATES, INC.
NC License: F-0334
riversandassociates.com
Since 1918
Six Forks Place III Ste. 230
353 E. Six Forks Road
Raleigh, NC 27609
919.594.1626
Engineers
Planners
Surveyors
Landscape Architects

SCO ID # 23-26923-01A

NO	REVISION	DATE

SEAL

NORTH CAROLINA REGISTERED LANDSCAPE ARCHITECT 0757 Paul R. Mohr 10/18/24

JKF ARCHITECTURE
625 LYNNDALE CT., SUITE F, GREENVILLE, NC 27858 252-355-1068

CRAVEN COMMUNITY COLLEGE
CORPORATE TRAINING CENTER
CITY OF NEW BERN - CRAVEN COUNTY - NC

DRAWING TITLE
WETLAND PLANTING PLAN

SCALE: AS SHOWN	DRAWING NO: L1.1
DRAWN: SBF	
CHECKED: PRM, JSJ, BPR	
DATE: 9-1-2024	
PROJECT NO.: 2023139	

© COPYRIGHT, JKF ARCHITECTURE PC. JOHN K. FARKAS, AIA

R:\LANDDEV\JKF_ARCH-CCC_CORP_TRNG_CTR-2023139\CAD\D_DWG\SHEETS\L1.5 WETLAND PLANTING PLAN.DWG - WETLAND - 9/20/2024 3:27:29 PM

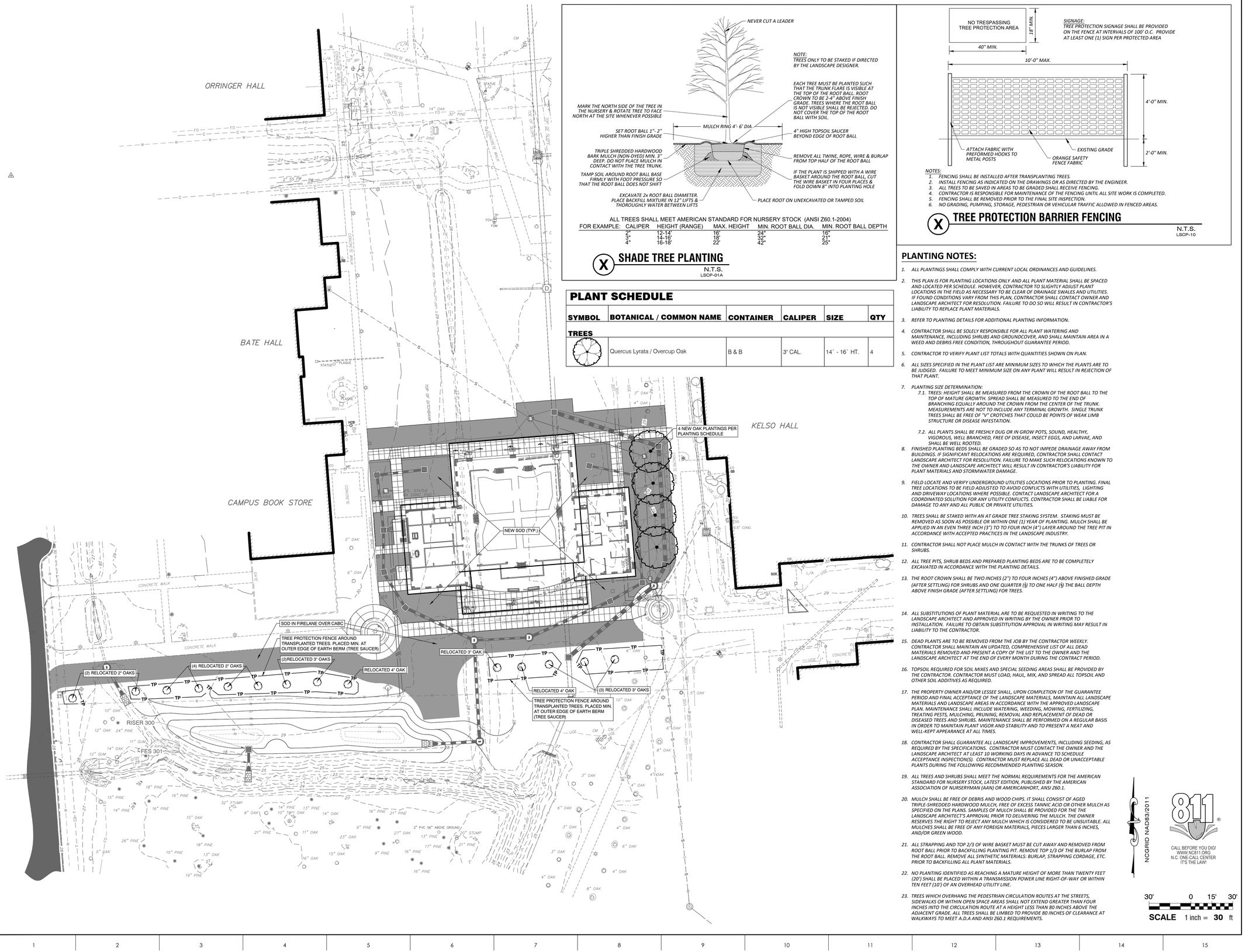

ALL TREES SHALL MEET AMERICAN STANDARD FOR NURSERY STOCK (ANSI Z60.1-2004)

FOR EXAMPLE: CALIPER	HEIGHT (RANGE)	MAX. HEIGHT	MIN. ROOT BALL DIA.	MIN. ROOT BALL DEPTH
2"	12-14'	18'	24"	16"
3"	14-16'	18'	32"	21"
4"	16-18'	22'	42"	25"

X SHADE TREE PLANTING

N.T.S.
LSCP-01A

PLANT SCHEDULE

SYMBOL	BOTANICAL / COMMON NAME	CONTAINER	CALIPER	SIZE	QTY
TREES					
	Quercus Lyrata / Overcup Oak	B & B	3" CAL.	14` - 16` HT.	4

NOTES:
1. FENCING SHALL BE INSTALLED AFTER TRANSPLANTING TREES.
2. INSTALL FENCING AS INDICATED ON THE DRAWINGS OR AS DIRECTED BY THE ENGINEER.
3. ALL TREES TO BE SAVED IN AREAS TO BE GRADED SHALL RECEIVE FENCING.
4. CONTRACTOR IS RESPONSIBLE FOR MAINTENANCE OF THE FENCING UNTIL ALL SITE WORK IS COMPLETED.
5. FENCING SHALL BE REMOVED PRIOR TO THE FINAL SITE INSPECTION.
6. NO GRADING, PUMPING, STORAGE, PEDESTRIAN OR VEHICULAR TRAFFIC ALLOWED IN FENCED AREAS.

X TREE PROTECTION BARRIER FENCING

N.T.S.
LSCP-10

PLANTING NOTES:

1. ALL PLANTINGS SHALL COMPLY WITH CURRENT LOCAL ORDINANCES AND GUIDELINES.
2. THIS PLAN IS FOR PLANTING LOCATIONS ONLY AND ALL PLANT MATERIAL SHALL BE SPACED AND LOCATED PER SCHEDULE. HOWEVER, CONTRACTOR TO SLIGHTLY ADJUST PLANT LOCATIONS IN THE FIELD AS NECESSARY TO BE CLEAR OF DRAINAGE SWALES AND UTILITIES. IF FOUND CONDITIONS VARY FROM THIS PLAN, CONTRACTOR SHALL CONTACT OWNER AND LANDSCAPE ARCHITECT FOR RESOLUTION. FAILURE TO DO SO WILL RESULT IN CONTRACTOR'S LIABILITY TO REPLACE PLANT MATERIALS.
3. REFER TO PLANTING DETAILS FOR ADDITIONAL PLANTING INFORMATION.
4. CONTRACTOR SHALL BE SOLELY RESPONSIBLE FOR ALL PLANT WATERING AND MAINTENANCE, INCLUDING SHRUBS AND GROUNDCOVER, AND SHALL MAINTAIN AREA IN A WEED AND DEBRIS FREE CONDITION, THROUGHOUT GUARANTEE PERIOD.
5. CONTRACTOR TO VERIFY PLANT LIST TOTALS WITH QUANTITIES SHOWN ON PLAN.
6. ALL SIZES SPECIFIED IN THE PLANT LIST ARE MINIMUM SIZES TO WHICH THE PLANTS ARE TO BE JUDGED. FAILURE TO MEET MINIMUM SIZE ON ANY PLANT WILL RESULT IN REJECTION OF THAT PLANT.
7. PLANTING SIZE DETERMINATION:
   7.1. TREES: HEIGHT SHALL BE MEASURED FROM THE CROWN OF THE ROOT BALL TO THE TOP OF MATURE GROWTH. SPREAD SHALL BE MEASURED TO THE END OF BRANCHING EQUALLY AROUND THE CROWN FROM THE CENTER OF THE TRUNK. MEASUREMENTS ARE NOT TO INCLUDE ANY TERMINAL GROWTH. SINGLE TRUNK TREES SHALL BE FREE OF "V" CROTCHES THAT COULD BE POINTS OF WEAK LIMB STRUCTURE OR DISEASE INFESTATION.
   7.2. ALL PLANTS SHALL BE FRESHLY DUG OR IN GROW POTS, SOUND, HEALTHY, VIGOROUS, WELL BRANCHED, FREE OF DISEASE, INSECT EGGS, AND LARVAE, AND SHALL BE WELL ROOTED.
8. FINISHED PLANTING BEDS SHALL BE GRADED SO AS TO NOT IMPEDE DRAINAGE AWAY FROM BUILDINGS. IF SIGNIFICANT RELOCATIONS ARE REQUIRED, CONTRACTOR SHALL CONTACT LANDSCAPE ARCHITECT FOR RESOLUTION. FAILURE TO MAKE SUCH RELOCATIONS KNOWN TO THE OWNER AND LANDSCAPE ARCHITECT WILL RESULT IN CONTRACTOR'S LIABILITY FOR PLANT MATERIALS AND STORMWATER DAMAGE.
9. FIELD LOCATE AND VERIFY UNDERGROUND UTILITIES LOCATIONS PRIOR TO PLANTING. FINAL TREE LOCATIONS TO BE FIELD ADJUSTED TO AVOID CONFLICTS WITH UTILITIES, LIGHTING AND DRIVEWAY LOCATIONS WHERE POSSIBLE. CONTACT LANDSCAPE ARCHITECT FOR A COORDINATED SOLUTION FOR ANY UTILITY CONFLICTS. CONTRACTOR SHALL BE LIABLE FOR DAMAGE TO ANY AND ALL PUBLIC OR PRIVATE UTILITIES.
10. TREES SHALL BE STAKED WITH AN AT GRADE TREE STAKING SYSTEM. STAKING MUST BE REMOVED AS SOON AS POSSIBLE OR WITHIN ONE (1) YEAR OF PLANTING. MULCH SHALL BE APPLIED IN AN EVEN THREE INCH (3") TO TO FOUR INCH (4") LAYER AROUND THE TREE PIT IN ACCORDANCE WITH ACCEPTED PRACTICES IN THE LANDSCAPE INDUSTRY.
11. CONTRACTOR SHALL NOT PLACE MULCH IN CONTACT WITH THE TRUNKS OF TREES OR SHRUBS.
12. ALL TREE PITS, SHRUB BEDS AND PREPARED PLANTING BEDS ARE TO BE COMPLETELY EXCAVATED IN ACCORDANCE WITH THE PLANTING DETAILS.
13. THE ROOT CROWN SHALL BE TWO INCHES (2") TO FOUR INCHES (4") ABOVE FINISHED GRADE (AFTER SETTLING) FOR SHRUBS AND ONE QUARTER (¼) TO ONE HALF (½) THE BALL DEPTH ABOVE FINISH GRADE (AFTER SETTLING) FOR TREES.
14. ALL SUBSTITUTIONS OF PLANT MATERIAL ARE TO BE REQUESTED IN WRITING TO THE LANDSCAPE ARCHITECT AND APPROVED IN WRITING BY THE OWNER PRIOR TO INSTALLATION. FAILURE TO OBTAIN SUBSTITUTION APPROVAL IN WRITING MAY RESULT IN LIABILITY TO THE CONTRACTOR.
15. DEAD PLANTS ARE TO BE REMOVED FROM THE JOB BY THE CONTRACTOR WEEKLY. CONTRACTOR SHALL MAINTAIN AN UPDATED, COMPREHENSIVE LIST OF ALL DEAD MATERIALS REMOVED AND PRESENT A COPY OF THE LIST TO THE OWNER AND THE LANDSCAPE ARCHITECT AT THE END OF EVERY MONTH DURING THE CONTRACT PERIOD.
16. TOPSOIL REQUIRED FOR SOIL MIXES AND SPECIAL SEEDING AREAS SHALL BE PROVIDED BY THE CONTRACTOR. CONTRACTOR MUST LOAD, HAUL, MIX, AND SPREAD ALL TOPSOIL AND OTHER SOIL ADDITIVES AS REQUIRED.
17. THE PROPERTY OWNER AND/OR LESSEE SHALL, UPON COMPLETION OF THE GUARANTEE PERIOD AND FINAL ACCEPTANCE OF THE LANDSCAPE MATERIALS, MAINTAIN ALL LANDSCAPE MATERIALS AND LANDSCAPE AREAS IN ACCORDANCE WITH THE APPROVED LANDSCAPE PLAN. MAINTENANCE SHALL INCLUDE WATERING, WEEDING, MOWING, FERTILIZING, TREATING PESTS, MULCHING, PRUNING, REMOVAL AND REPLACEMENT OF DEAD OR DISEASED TREES AND SHRUBS. MAINTENANCE SHALL BE PERFORMED ON A REGULAR BASIS IN ORDER TO MAINTAIN PLANT VIGOR AND STABILITY AND TO PRESENT A NEAT AND WELL-KEPT APPEARANCE AT ALL TIMES.
18. CONTRACTOR SHALL GUARANTEE ALL LANDSCAPE IMPROVEMENTS, INCLUDING SEEDING, AS REQUIRED BY THE SPECIFICATIONS. CONTRACTOR MUST CONTACT THE OWNER AND THE LANDSCAPE ARCHITECT AT LEAST 10 WORKING DAYS IN ADVANCE TO SCHEDULE ACCEPTANCE INSPECTION(S). CONTRACTOR MUST REPLACE ALL DEAD OR UNACCEPTABLE PLANTS DURING THE FOLLOWING RECOMMENDED PLANTING SEASON.
19. ALL TREES AND SHRUBS SHALL MEET THE NORMAL REQUIREMENTS FOR THE AMERICAN STANDARD FOR NURSERY STOCK, LATEST EDITION, PUBLISHED BY THE AMERICAN ASSOCIATION OF NURSERYMAN (AAN) OR AMERICANHORT, ANSI Z60.1.
20. MULCH SHALL BE FREE OF DEBRIS AND WOOD CHIPS. IT SHALL CONSIST OF AGED TRIPLE-SHREDDED HARDWOOD MULCH, FREE OF EXCESS TANNIC ACID OR OTHER MULCH AS SPECIFIED ON THE PLANS. SAMPLES OF MULCH SHALL BE PROVIDED FOR THE THE LANDSCAPE ARCHITECT'S APPROVAL PRIOR TO DELIVERING THE MULCH. THE OWNER RESERVES THE RIGHT TO REJECT ANY MULCH WHICH IS CONSIDERED TO BE UNSUITABLE. ALL MULCHES SHALL BE FREE OF ANY FOREIGN MATERIALS, PIECES LARGER THAN 6 INCHES, AND/OR GREEN WOOD.
21. ALL STRAPPING AND TOP 2/3 OF WIRE BASKET MUST BE CUT AWAY AND REMOVED FROM ROOT BALL PRIOR TO BACKFILLING PLANTING PIT. REMOVE TOP 1/3 OF THE BURLAP FROM THE ROOT BALL. REMOVE ALL SYNTHETIC MATERIALS: BURLAP, STRAPPING CORDAGE, ETC. PRIOR TO BACKFILLING ALL PLANT MATERIALS.
22. NO PLANTING IDENTIFIED AS REACHING A MATURE HEIGHT OF MORE THAN TWENTY FEET (20') SHALL BE PLACED WITHIN A TRANSMISSION POWER LINE RIGHT-OF-WAY OR WITHIN TEN FEET (10') OF AN OVERHEAD UTILITY LINE.
23. TREES WHICH OVERHANG THE PEDESTRIAN CIRCULATION ROUTES AT THE STREETS, SIDEWALKS OR WITHIN OPEN SPACE AREAS SHALL NOT EXTEND GREATER THAN FOUR INCHES INTO THE CIRCULATION ROUTE AT A HEIGHT LESS THAN 80 INCHES ABOVE THE ADJACENT GRADE. ALL TREES SHALL BE LIMBED TO PROVIDE 80 INCHES OF CLEARANCE AT WALKWAYS TO MEET A.D.A AND ANSI Z60.1 REQUIREMENTS.

NCGRID NAD83/2011

811 CALL BEFORE YOU DIG! WWW.NC811.ORG N.C. ONE-CALL CENTER IT'S THE LAW!

30' 0 15' 30'

SCALE 1 inch = 30 ft

GENERAL NOTES

LEGEND

BERMUDA SOD

TREE TRANSPLANTING NOTES:

1. PRUNE DEAD, DISEASED, OR DAMAGED BRANCHES PRIOR TO TRANSPLANTING. NO PRUNING OF LEADER BRANCHES.
2. TREES MAY BE WIRE BALLED AND BURLAPPED, BOXED, BARE ROOTED, OR SPADED. ROOTBALL SHALL BE 16" MIN. DIAMETER FOR 1" DBH TREES, WITH MIN. 8" DIAMETER PROVIDED FOR EACH ADDITIONAL DBH INCH. DEPTH OF ROOTBALL SHALL MEET ANSI STANDARDS IN ACCORDANCE WITH TREES DBH, MIN. 10" FOR 1" DBH TREES.
3. MARK NORTH SIDE OF TREE PRIOR TO EXCAVATION AND ORIENT TREE IN SAME DIRECTION WHEN RELOCATING.
4. TREE PITS SHALL BE DUG IMMEDIATELY BEFORE PLACING TREES. TREE PITS SHALL BE DUG TO A MAXIMUM DEPTH OF THE ROOTBALL AND TO A MINIMUM WIDTH EQUAL TO TWO TIMES THE ROOTBALL DIAMETER. PITS SHALL BE DUG WITH SLOPED SIDES.
5. PLACE PLANT MATERIAL IN PIT SO ROOT FLARE IS VISIBLE 2"-4" ABOVE GRADE. BACKFILL HALF WITH REMOVED SOIL, REMOVING ANY METAL, WOOD, OR SYNTHETIC PRODUCTS FROM BALL OR ROOT SYSTEM PRIOR TO BACKFILLING. GENTLY TAMP SOIL AND CONTINUE TO BACKFILL, TAMPING SOIL EACH 6" OF DEPTH. CLEAR ANY MOUNDED SOIL FROM TRUNK. WATER IMMEDIATELY AFTER BACKFILLING.
6. PROVIDE EARTH BERM CONSISTING OF BACKFILL SOIL MIXTURE AROUND THE EDGE OF PLANT PIT, MIN. 4" HT. AND 15" WIDTH.
7. HOLD TREE FIRMLY IN PLACE WITH 3 BRACING OR GROUND STAKES AT EQUAL INTERVALS OUTSIDE OF BERM, ANCHORED AT MIN. ⅔ TREE HEIGHT. TURNBUCKLES SHALL BE USED ON GUYING MATERIAL, CENTERED ON GUY LINES, FOR TREES GREATER THAN 3" DBH. CHAFING GUARDS SHALL BE USED FOR METAL GUYING MATERIAL.
8. PROVIDE MULCH WITHIN 48 HOURS OF TRANSPLANTING, MIN. 3" THICK.
9. BACKFILL HOLES FROM REMOVAL SITE WITH ON-SITE SOIL TAMPED TO 90% COMPACTION AT EX. GRADE.
10. CONTRACTOR SHALL WATER TRANSPLANTED TREES REGULARLY, AS NEEDED, THROUGHOUT THE CONSTRUCTION PERIOD.

RAI Project #2023139

Rivers & ASSOCIATES, INC. Since 1918
riversandassociates.com
NC License: F-0334
Six Forks Place III Ste. 230
353 E. Six Forks Road
Raleigh, NC 27609
919.594.1626
Engineers
Planners
Surveyors
Landscape Architects

SCO ID # 23-26923-01A

NO	REVISION	DATE

SEAL

NORTH CAROLINA REGISTERED LANDSCAPE ARCHITECT 1757 Paul R. Meyer 10/18/24

JKF ARCHITECTURE
625 LYNNDALE CT., SUITE F, GREENVILLE, NC 27858 252-355-1068

CRAVEN COMMUNITY COLLEGE
CORPORATE TRAINING CENTER
CITY OF NEW BERN - CRAVEN COUNTY - NC

DRAWING TITLE

LANDSCAPE PLAN

SCALE	AS SHOWN
DRAWN	MS, CS
CHECKED	JSJ, BPR
DATE	9-1-2024
PROJECT NO.	2023139
DRAWING NO	L1.2

© COPYRIGHT, JKF ARCHITECTURE PC, JOHN K. FARKAS, AIA

R:\LANDDEV\JKF_ARCH-CCC_CORP_TRNG_CTR\2023139\CAD\D_DWG\SHEETS\L1.02 LANDSCAPE PLAN.DWG - L1.2 LANDSCAPE PLAN - 9/20/2024 3:29:08 PM

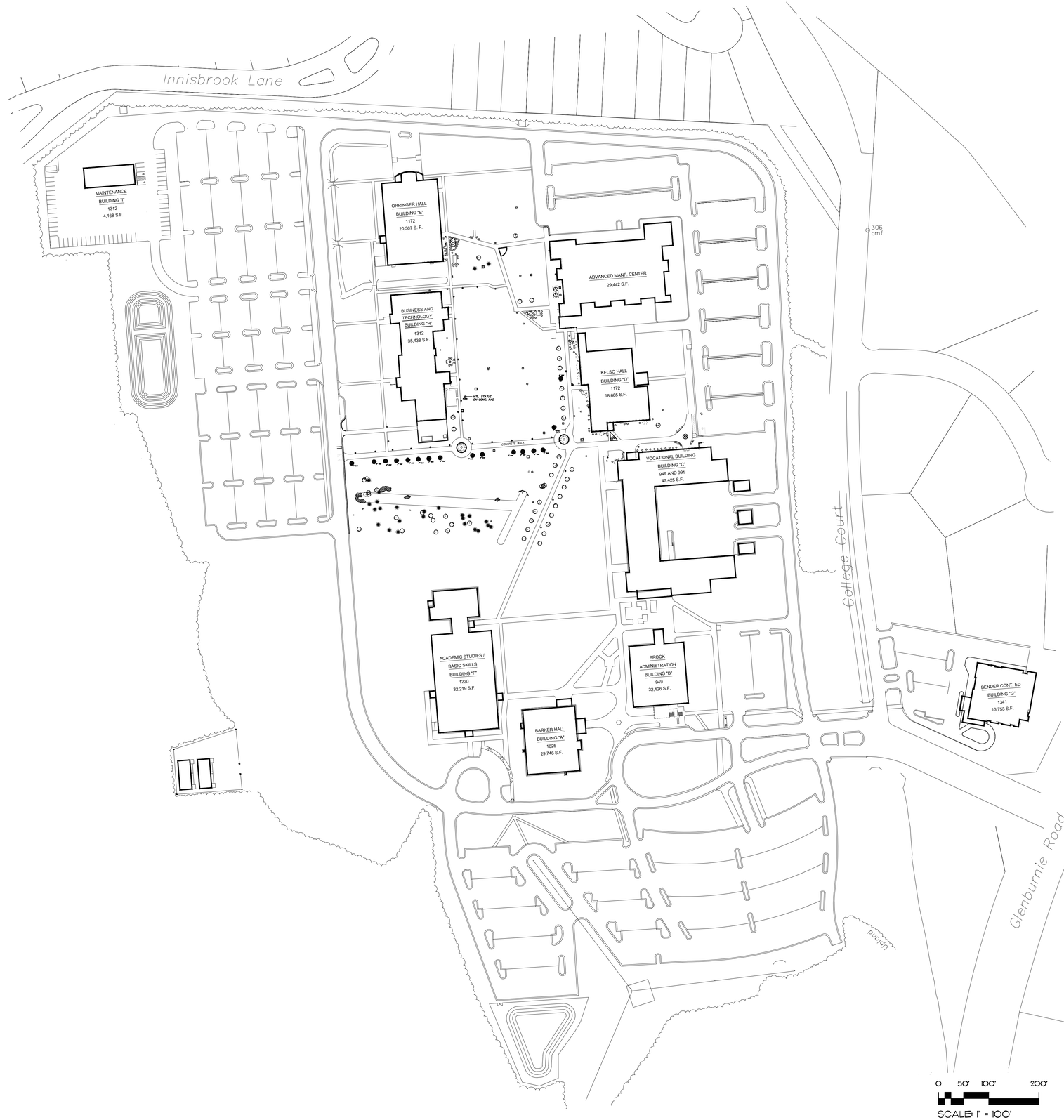

SITE PLAN A15
1" = 100'

MATERIALS KEYING LEGEND

GENERAL NOTES

KEY PLAN

SCO ID #23-26923-01A

NO	REVISION	DATE

SEAL

JOHN K. FARKAS
REGISTERED ARCHITECT
5922
10/18/2024
GREENVILLE, N.C.

JKF ARCHITECTURE

625 LYNNDALE CT., SUITE F, GREENVILLE, NC 27858 252-355-1068

CRAVEN COMMUNITY COLLEGE
CORPORATE TRAINING CENTER
NEW BERN, NC

DRAWING TITLE
EXISTING OVERALL CAMPUS PLAN

SCALE: 1" = 100"	DRAWING NO: ASP0.0
DRAWN: MCZ	
CHECKED: JKF	
DATE: 9-1-2024	
PROJECT NO.: 2023-09	

© COPYRIGHT, JKF ARCHITECTURE PC, JOHN K. FARKAS, AIA

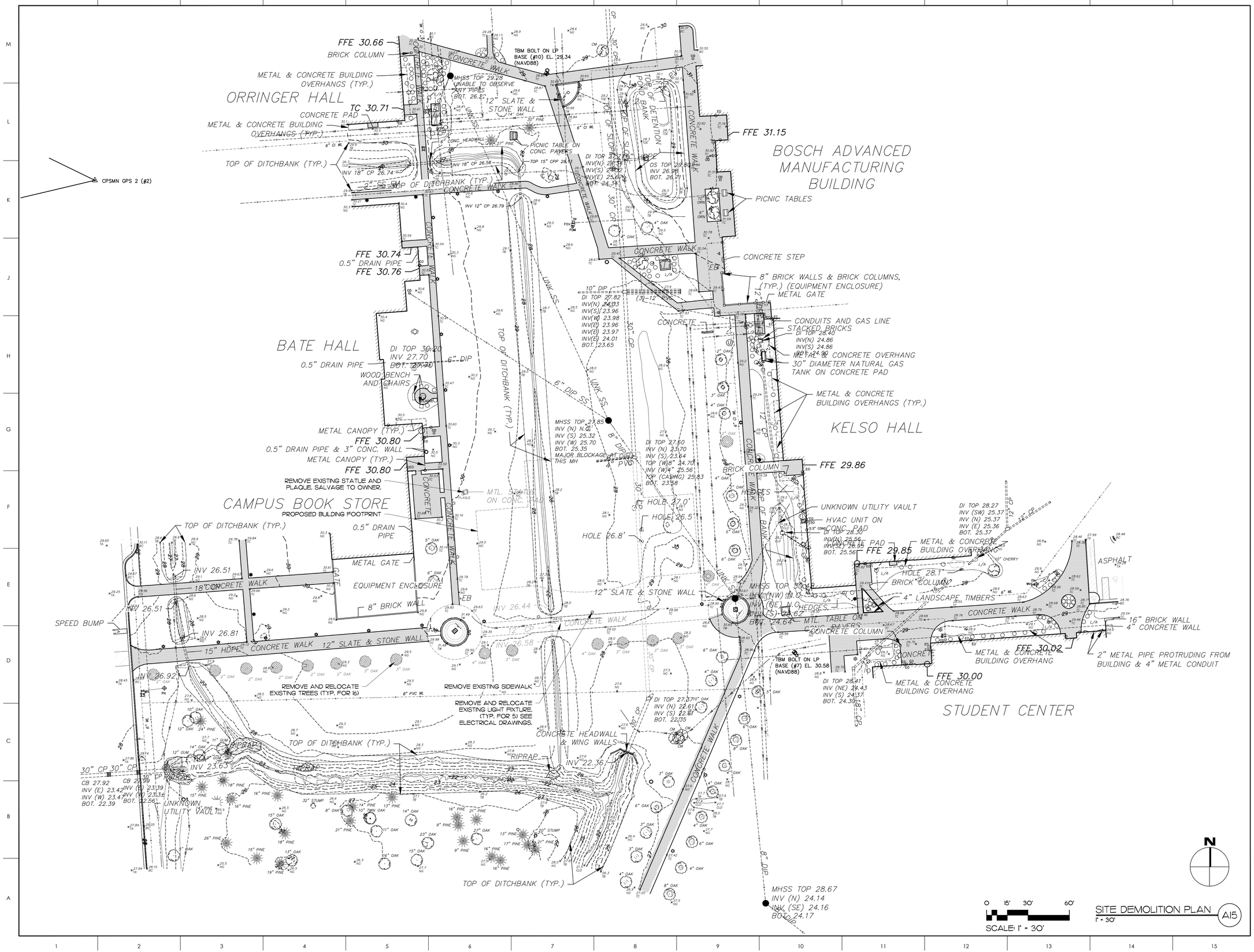

MATERIALS KEYING LEGEND

GENERAL NOTES

1. SURVEY INFORMATION BASE ON THE RIVERS & ASSOCIATES, INC. SURVEY DATED 2-14-2024.

KEY PLAN

SCO ID #23-26923-01A

NO	REVISION	DATE

SEAL

JOHN K. FARKAS — REGISTERED ARCHITECT — 5922 — 10/18/2024 — GREENVILLE, N.C.

JKF ARCHITECTURE

625 LYNNDALE CT., SUITE F, GREENVILLE, NC 27858 252-355-1068

CRAVEN COMMUNITY COLLEGE
CORPORATE TRAINING CENTER
NEW BERN, NC

DRAWING TITLE

SITE
DEMOLITION PLAN

SCALE	1" = 30"
DRAWN	MCZ
CHECKED	JKF
DATE	9-1-2024
PROJECT NO.	2023-09
DRAWING NO	ASP0.1

© COPYRIGHT, JKF ARCHITECTURE PC, JOHN K. FARKAS, AIA



SITE PLAN A15
1" = 100'

MATERIALS KEYING LEGEND

GENERAL NOTES

KEY PLAN

SCO ID #23-26923-01A

NO	REVISION	DATE

SEAL

JOHN K. FARKAS REGISTERED ARCHITECT 10/18/2024 5922 GREENVILLE, N.C.

JKF ARCHITECTURE

625 LYNNDALE CT., SUITE F, GREENVILLE, NC 27858 252-355-1068

CRAVEN COMMUNITY COLLEGE
CORPORATE TRAINING CENTER
NEW BERN, NC

DRAWING TITLE

OVERALL CAMPUS PLAN

SCALE: 1" = 100'	DRAWING NO: ASP1.0
DRAWN: MCZ	
CHECKED: JKF	
DATE: 9-1-2024	
PROJECT NO.: 2023-09	

COPYRIGHT, JKF ARCHITECTURE PC, JOHN K. FARKAS, AIA

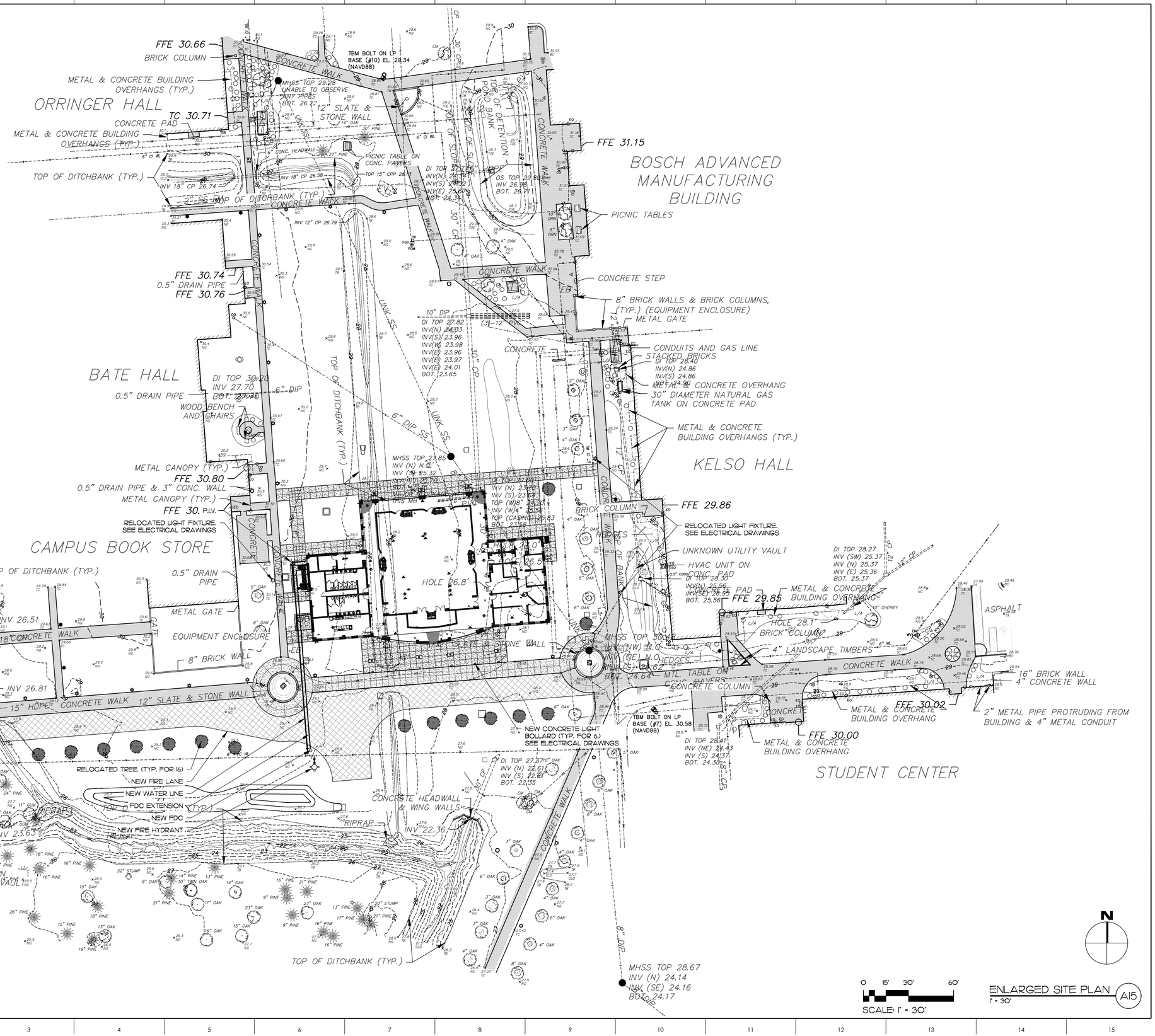

MATERIALS KEYING LEGEND

GENERAL NOTES

1. SURVEY INFORMATION BASE ON THE RIVERS & ASSOCIATES, INC. SURVEY DATED 2-14-2024.

KEY PLAN

SCO ID #23-26923-01A

NO	REVISION	DATE

SEAL

JOHN K. FARKAS REGISTERED ARCHITECT 5922 10/18/2024

JKF ARCHITECTURE

625 LYNNDALE CT., SUITE F, GREENVILLE, NC 27858 252-355-1068

CRAVEN COMMUNITY COLLEGE
CORPORATE TRAINING CENTER
NEW BERN, NC

DRAWING TITLE
ENLARGED SITE PLAN

SCALE	1" = 30"
DRAWN	MCZ
CHECKED	JKF
DATE	9-1-2024
PROJECT NO.	2023-09
DRAWING NO	ASP1.1

© COPYRIGHT, JKF ARCHITECTURE PC, JOHN K. FARKAS, AIA

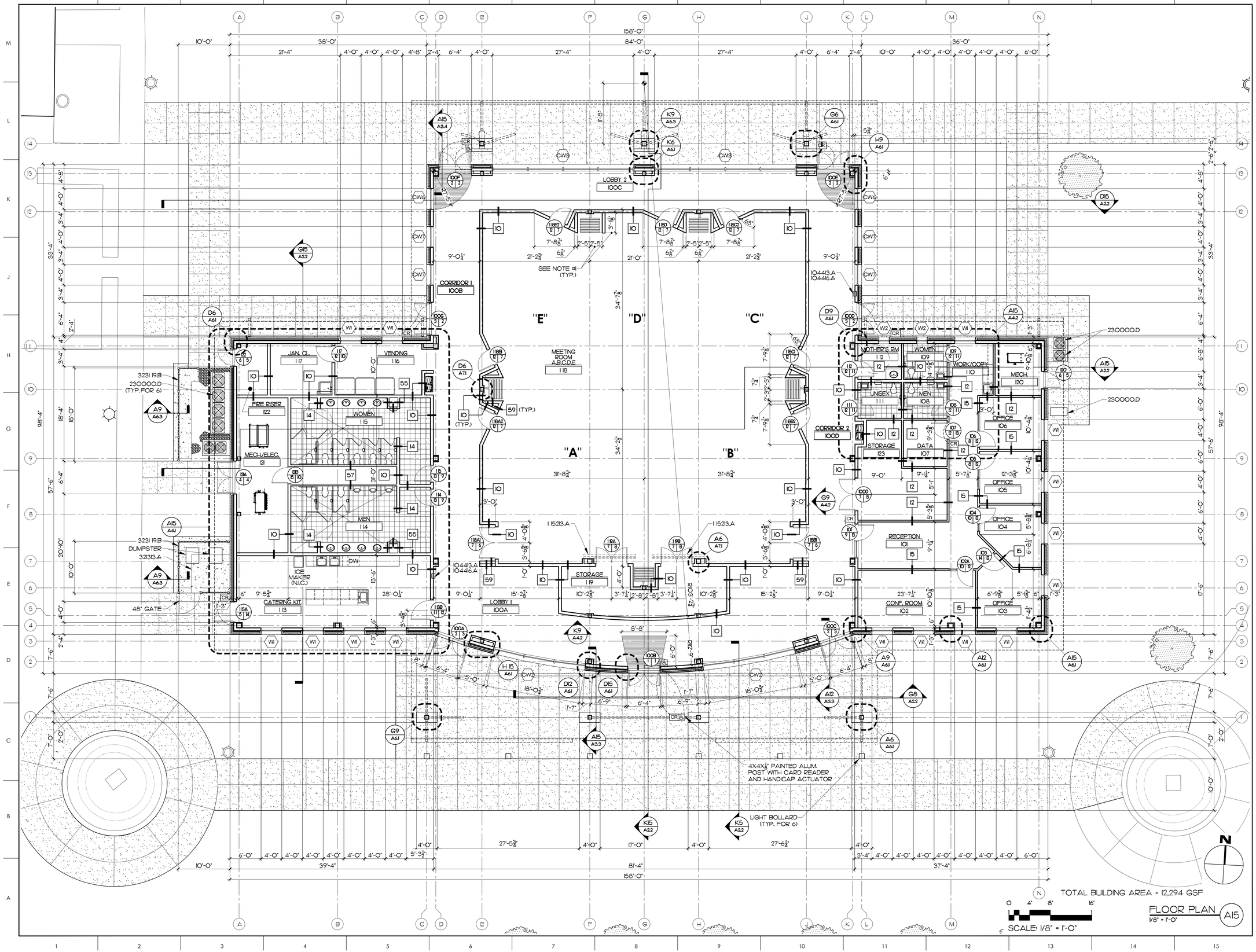

MATERIALS KEYING LEGEND

104413.A	-	SEMI-RECESSED FIRE EXTINGUISHER CABINET
104416.A	-	FIRE EXTINGUISHER
115213.A	-	PROJECTION SCREEN, ELECTRICALLY OPERATED, RECESSED
230000.D	-	HVAC EQUIPMENT
321313.A	-	CONCRETE SIDEWALK, 4" THICK
3231 19.B	-	ALUMINUM ORNAMENTAL FENCING

GENERAL NOTES

1. COORDINATE FOLDING PARTITION STACK WIDTH AND DEPTH WITH PARTITION MANUFACTURERS REQUIREMENTS.

KEY PLAN

SCO ID #23-26923-01A

NO	REVISION	DATE

SEAL

JOHN K. FARKAS REGISTERED ARCHITECT 5922 GREENVILLE, N. CAROLINA 10/18/2024

JKF ARCHITECTURE

625 LYNNDALE CT., SUITE F, GREENVILLE, NC 27858 252-355-1068

CRAVEN COMMUNITY COLLEGE
CORPORATE TRAINING CENTER
NEW BERN, NC

DRAWING TITLE: FLOOR PLAN

SCALE: 1/8" = 1'-0"	DRAWING NO: A1.1
DRAWN: MCZ	
CHECKED: JKF	
DATE: 9-1-2024	
PROJECT NO.: 2023-09	

© COPYRIGHT, JKF ARCHITECTURE PC, JOHN K. FARKAS, AIA

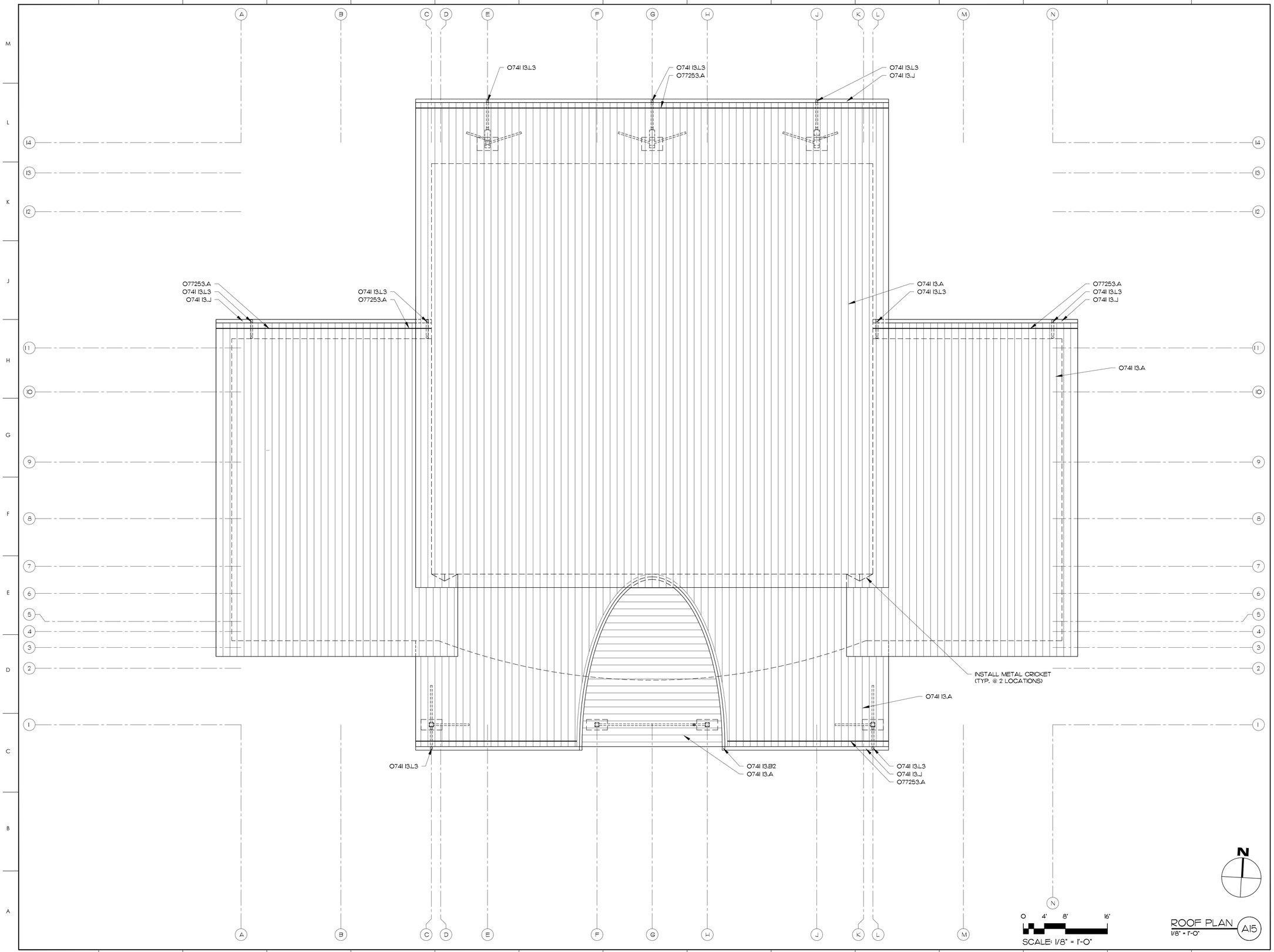

ROOF PLAN A15
1/8" = 1'-0"

MATERIALS KEYING LEGEND

0741 13.A - METAL ROOF, STANDING SEAM SYSTEM
0741 13.B2 - METAL ROOF, STANDING SEAM, VALLEY FLASHING
0741 13.J - METAL GUTTER
0741 13.L3 - METAL DOWNSPOUT, 5X5
077253.A - SNOW GUARD

GENERAL NOTES

KEY PLAN

SCO ID #23-26923-01A

NO	REVISION	DATE

SEAL

JOHN K. FARKAS REGISTERED ARCHITECT 5922 10/18/2024

JKF ARCHITECTURE
625 LYNNDALE CT., SUITE F, GREENVILLE, NC 27858 252-355-1068

CRAVEN COMMUNITY COLLEGE
CORPORATE TRAINING CENTER
NEW BERN, NC

DRAWING TITLE
ROOF PLAN

SCALE	1/8" = 1'-0"
DRAWN	MBD
CHECKED	JKF
DATE	9-1-2024
PROJECT NO.	2023-09

DRAWING NO
A1.2

© COPYRIGHT, JKF ARCHITECTURE PC, JOHN K. FARKAS, AIA

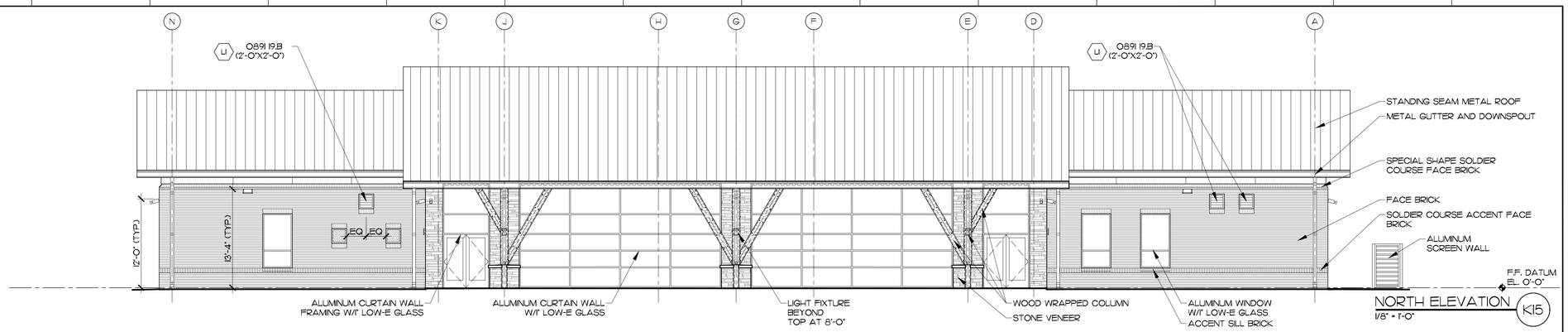

NORTH ELEVATION K15
1/8" = 1'-0"

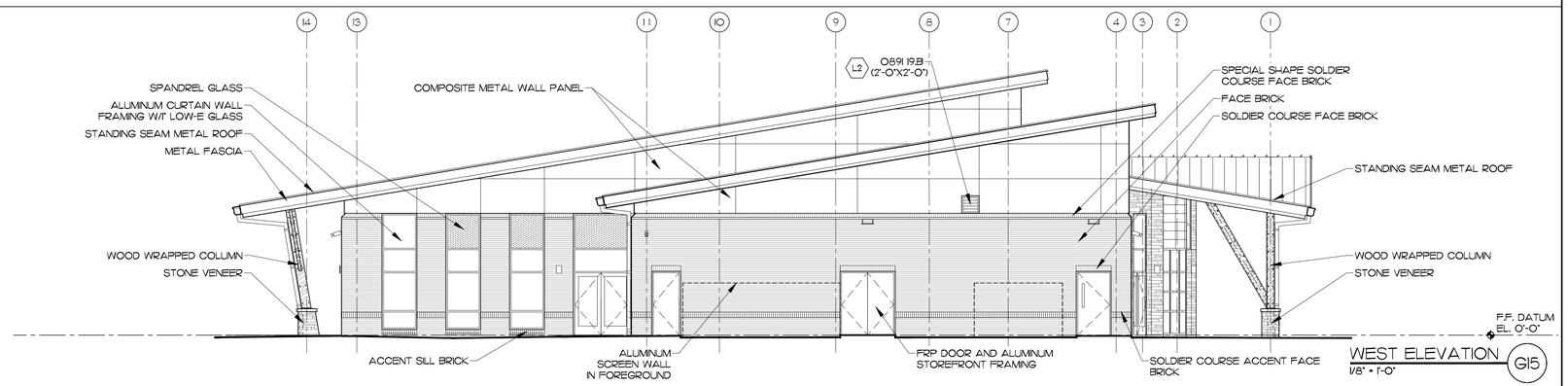

WEST ELEVATION G15
1/8" = 1'-0"

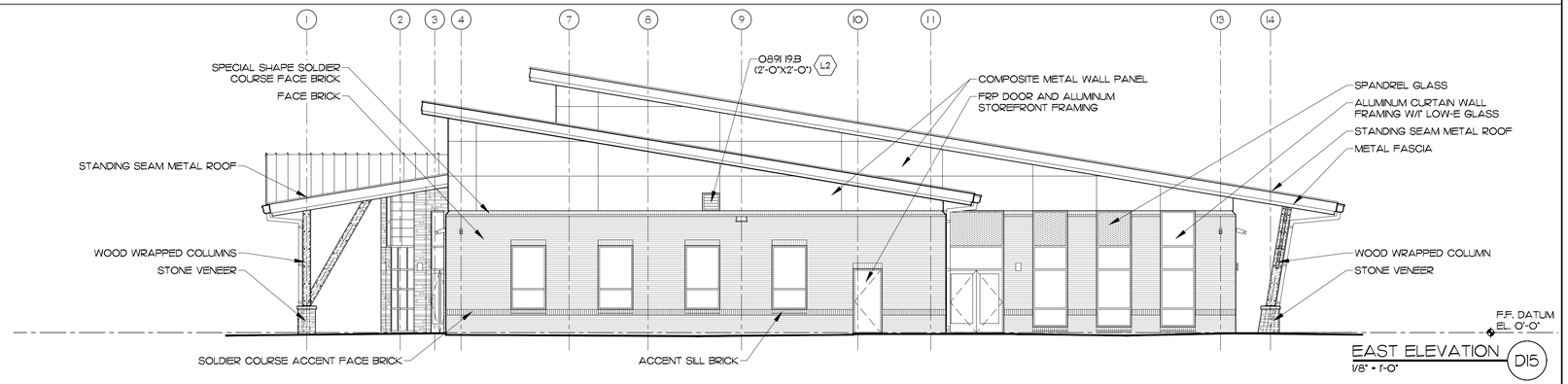

EAST ELEVATION D15
1/8" = 1'-0"

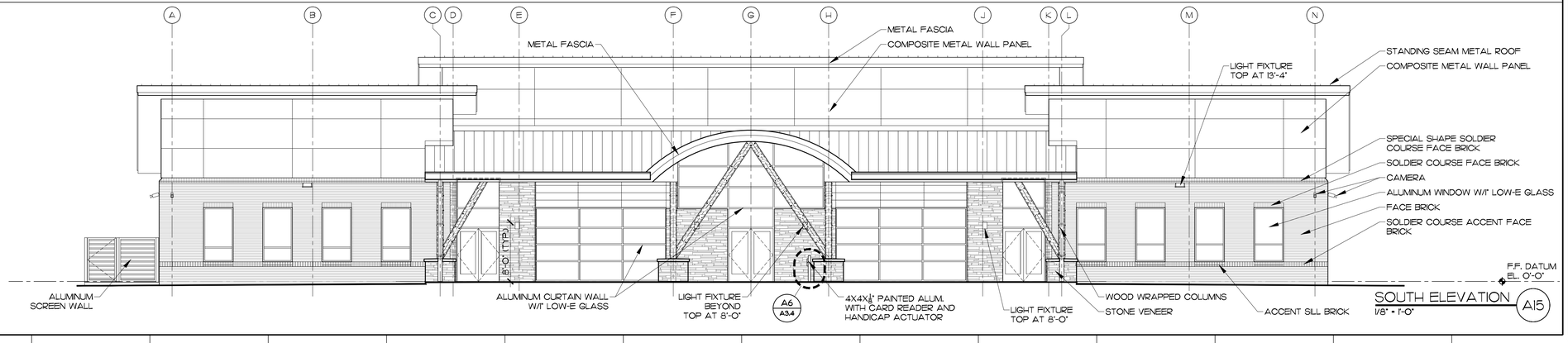

SOUTH ELEVATION A15
1/8" = 1'-0"

MATERIALS KEYING LEGEND

08911 9.B - FIXED, FORMED-METAL LOUVER

GENERAL NOTES

KEY PLAN

SCO ID #23-26923-01A

NO	REVISION	DATE

SEAL

JOHN K. FARKAS REGISTERED ARCHITECT 5922 GREENVILLE, N 10/18/2024

JKF ARCHITECTURE
625 LYNNDALE CT., SUITE F, GREENVILLE, NC 27858 252-355-1068

CRAVEN COMMUNITY COLLEGE
CORPORATE TRAINING CENTER
NEW BERN, NC

DRAWING TITLE
EXTERIOR ELEVATIONS

SCALE	1/8" = 1'-0"
DRAWN	JRH
CHECKED	JKF
DATE	9-1-2024
PROJECT NO.	2023-09
DRAWING NO	A2.1

© COPYRIGHT, JKF ARCHITECTURE PC, JOHN K. FARKAS, AIA

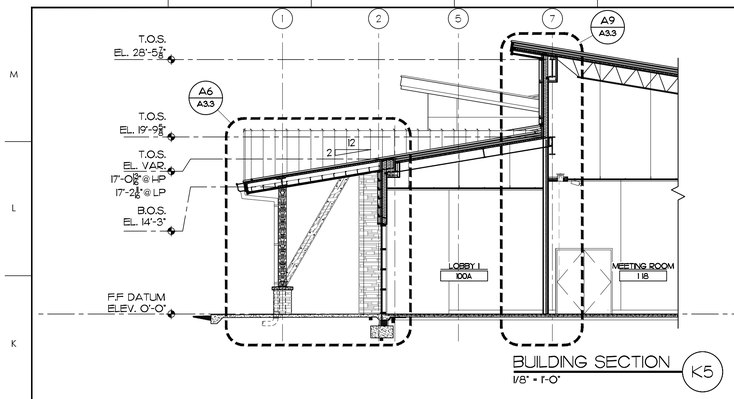

BUILDING SECTION K5
1/8" = 1'-0"

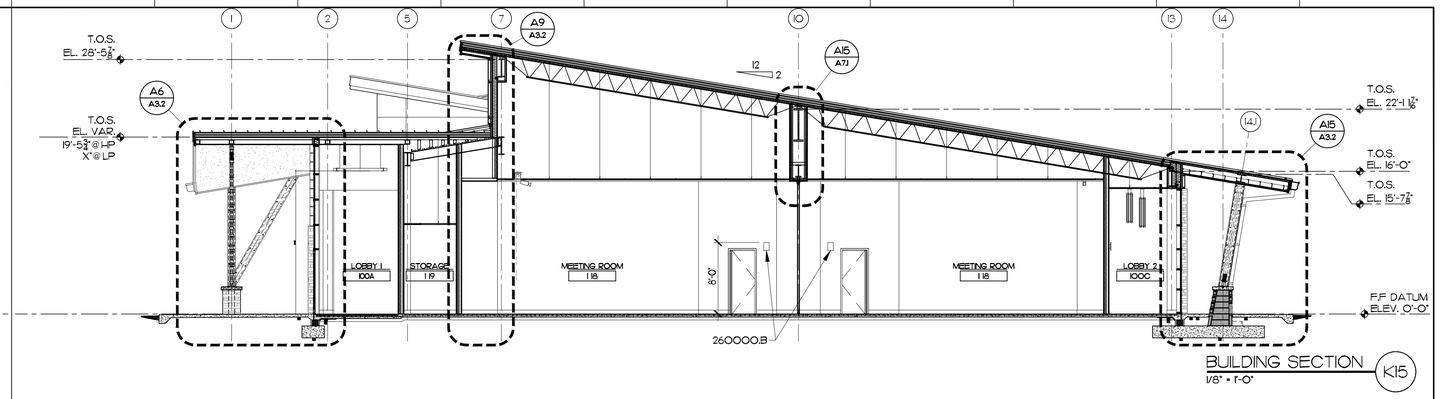

BUILDING SECTION K15
1/8" = 1'-0"

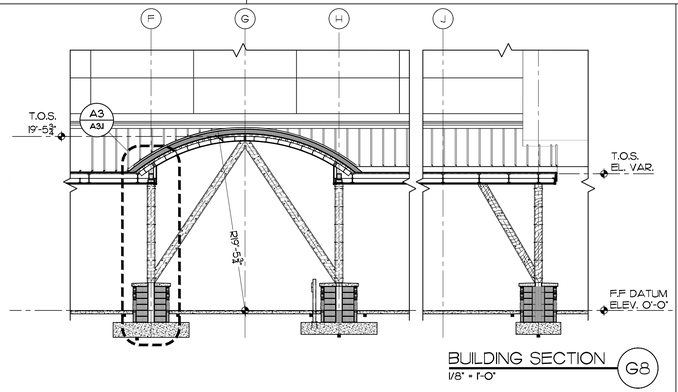

BUILDING SECTION G8
1/8" = 1'-0"

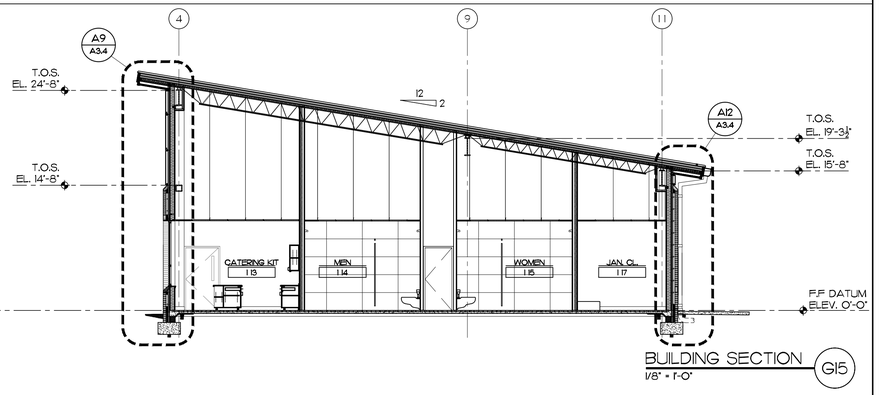

BUILDING SECTION G15
1/8" = 1'-0"

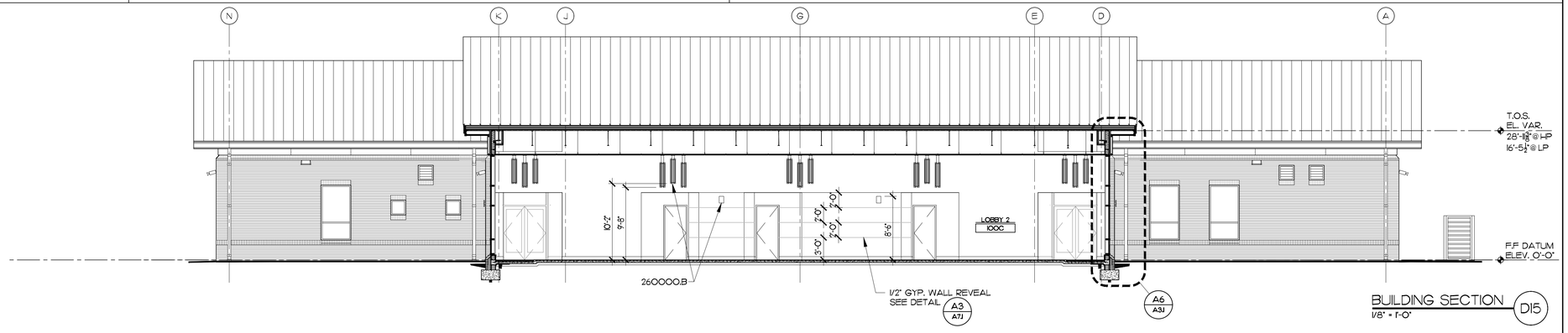

BUILDING SECTION D15
1/8" = 1'-0"

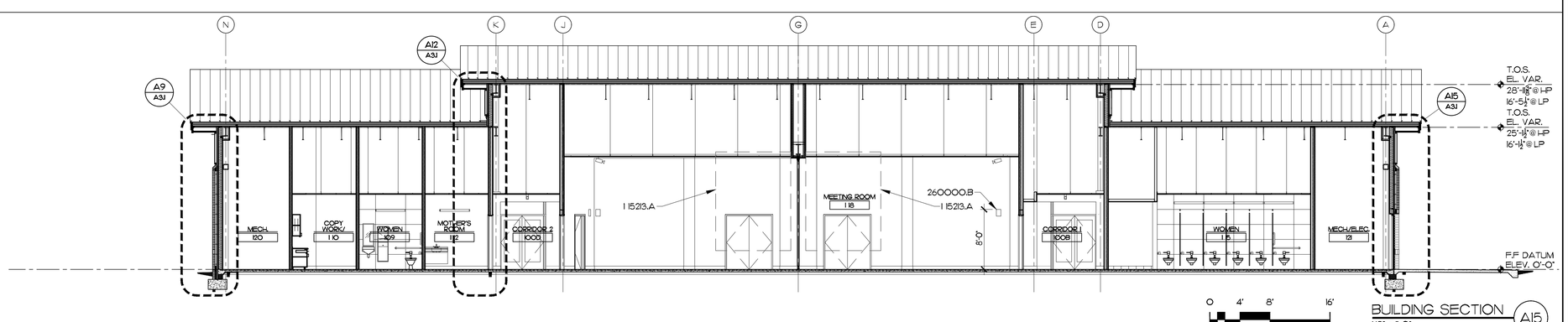

0 4' 8' 16'
SCALE: 1/8" = 1'-0"

BUILDING SECTION A15
1/8" = 1'-0"

MATERIALS KEYING LEGEND

I 15213.A - PROJECTION SCREEN, ELECTRICALLY OPERATED, RECESSED

260000.B - INTERIOR LIGHT FIXTURE

GENERAL NOTES

KEY PLAN

SCO ID #23-26923-01A

NO	REVISION	DATE

SEAL

JOHN K. FARKAS REGISTERED ARCHITECT 5922 GREENVILLE, N 10/18/2024

JKF ARCHITECTURE
625 LYNNDALE CT., SUITE F, GREENVILLE, NC 27858 252-355-1068

CRAVEN COMMUNITY COLLEGE
CORPORATE TRAINING CENTER
NEW BERN, NC

DRAWING TITLE
BUILDING SECTIONS

SCALE	1/8" = 1'-0"
DRAWN	MCZ
CHECKED	JKF
DATE	9-1-2024
PROJECT NO.	2023-09

DRAWING NO
A2.2

© COPYRIGHT, JKF ARCHITECTURE PC, JOHN K. FARKAS, AIA

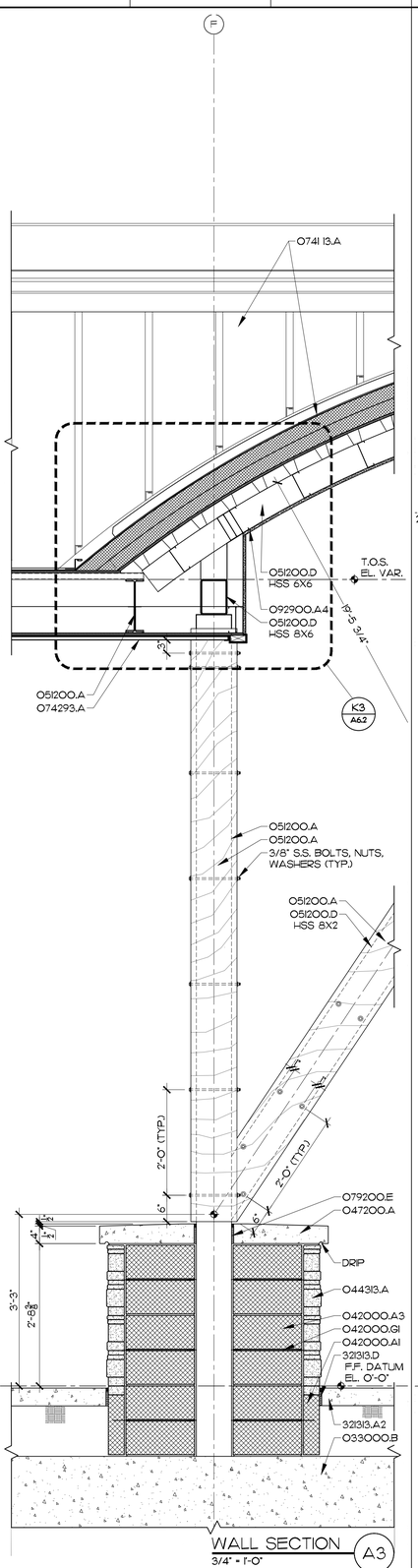

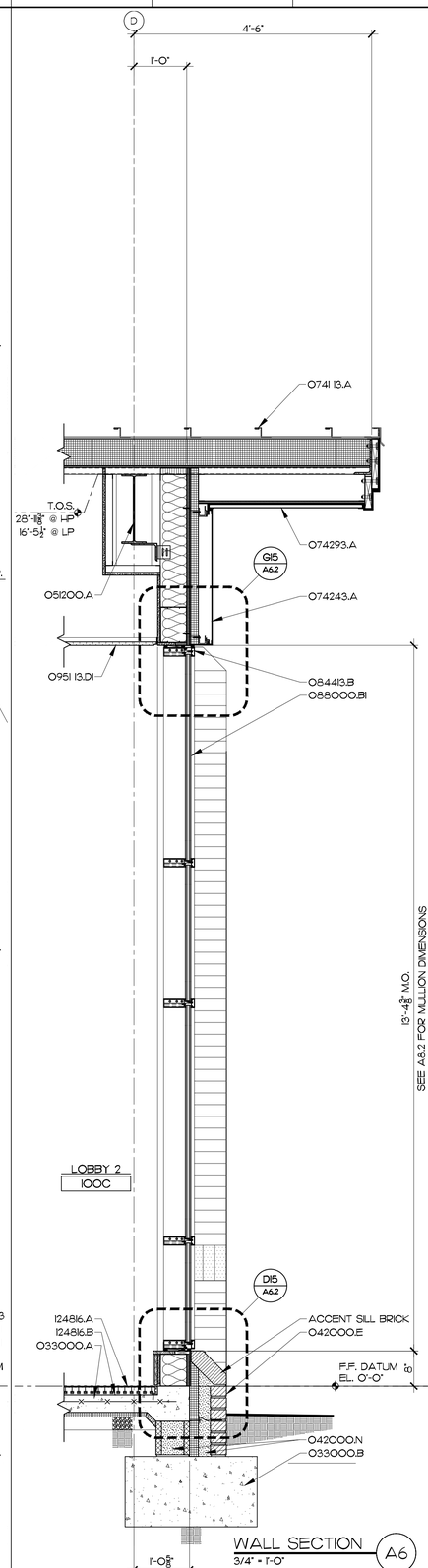

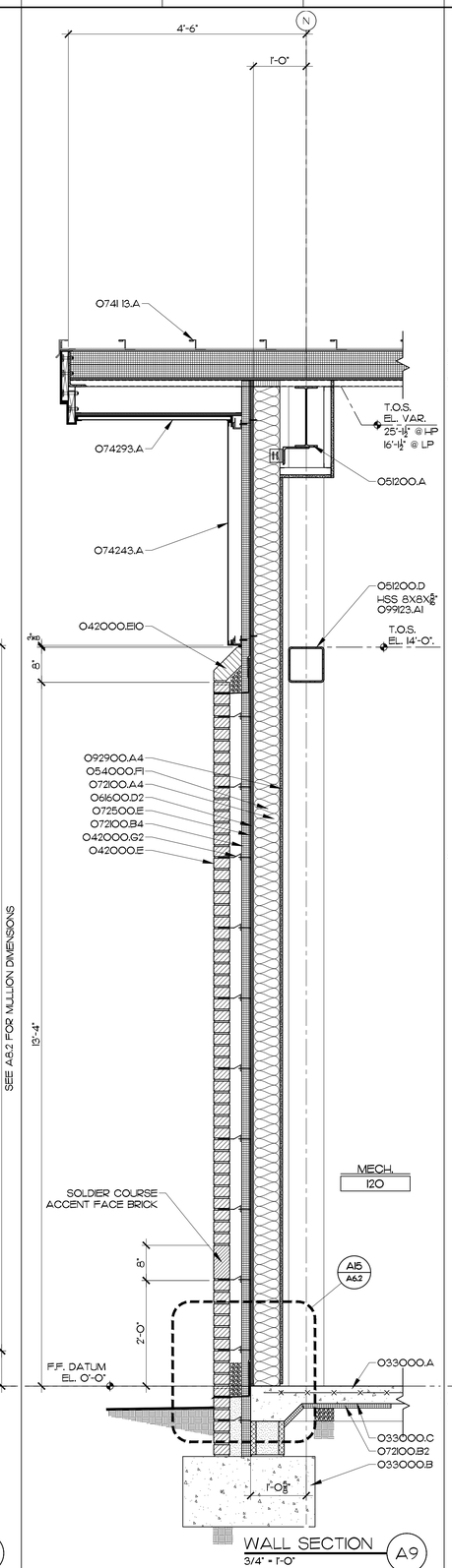

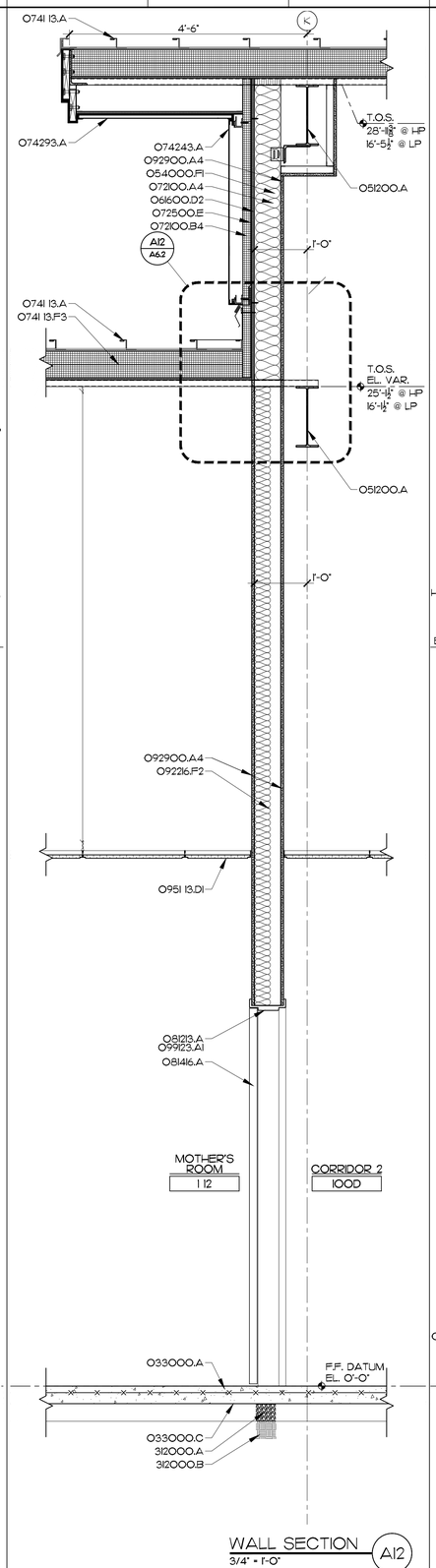

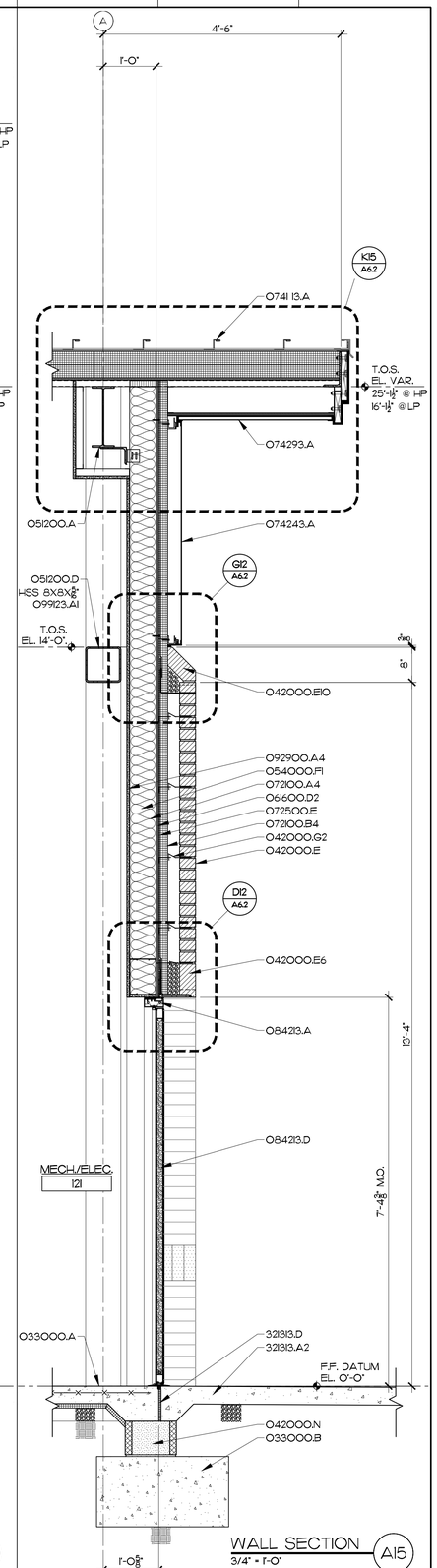

MATERIALS KEYING LEGEND

O33000.A	-	CONCRETE SLAB ON GRADE, SEE STRUCTURAL
O33000.B	-	CONCRETE FOOTING, SEE STRUCTURAL
O33000.C	-	VAPOR BARRIER
O42000.AI	-	CONCRETE MASONRY UNIT, 4"
O42000.A3	-	CONCRETE MASONRY UNIT, 8"
O42000.E	-	FACE BRICK
O42000.EIO	-	FACE BRICK, SOLDIER COURSE SILL, SPECIAL SHAPE
O42000.E6	-	FACE BRICK, SHELF BRICK, SOLDIER COURSE
O42000.GI	-	HORIZONTAL JOINT REINFORCING AT 16" O.C. VERT.
O42000.G2	-	ADJ. BRICK TIES AT 16" O.C. VERT., 24" O.C. HORIZ.
O42000.N	-	GROUT SOLID
O44313.A	-	ANCHORED STONE MASONRY VENEER
O47200.A	-	CAST STONE MASONRY
O51200.A	-	STRUCTURAL STEEL, SEE STRUCTURAL DRAWINGS
O51200.D	-	TUBE STEEL, SIZE AS INDICATED
O54000.FI	-	COLD FORMED METAL FRAMING, 6" STUD AT 16" O.C.
O61600.D2	-	GLASS-MAT GYPSUM SHEATHING, 5/8" THICK
O62013.E	-	5/4, ROUGH CUT
O72100.A4	-	R-19 BATT INSULATION
O72100.B2	-	1" RIGID INSULATION
O72100.B4	-	2" RIGID INSULATION
O72500.E	-	BUILDING WRAP
O741 13.A	-	METAL ROOF, STANDING SEAM SYSTEM
O741 13.F3	-	RIGID INSULATION, 6" THICK
O74243.A	-	COMPOSITE WALL PANEL, FLUSH PANEL W/REVEAL
O74293.A	-	METAL SOFFIT PANELS
O79200.E	-	COMPRESSIVE FILL
O81213.A	-	HOLLOW METAL FRAME
O81416.A	-	SOLID CORE WOOD DOOR, FLUSH
O84213.A	-	STOREFRONT FRAMING, THERMALLY BROKEN
O84213.D	-	ALUMINUM FRP DOOR
O84413.B	-	ALUMINUM CURTAIN WALL FRAMING
O88000.BI	-	1" INSULATING GLASS-LOW E
O92216.F2	-	6" METAL STUDS AT 16" O.C.
O92900.A4	-	5/8" GYPSUM WALLBOARD
O951 13.DI	-	ACOUSTICAL PANEL CEILING TILE, 2X2
O99123.AI	-	PAINT FINISH, INTERIOR SYSTEM
124816.A	-	FOOT GRILLE, RECESSED
124816.B	-	LEVELING BED FRAME FOR FOOT GRILLE
312000.A	-	POROUS FILL
312000.B	-	COMPACTED FILL
321313.A2	-	CONCRETE PAVING, SEE CIVIL DRAWINGS
321313.D	-	COMPRESSIBLE FILL

KEY PLAN

SCO ID #23-26923-01A

NO	REVISION	DATE

SEAL

JOHN K. FARKAS
REGISTERED ARCHITECT
10/18/2024
5922
GREENVILLE, N.C.

JKF ARCHITECTURE

625 LYNNDALE CT., SUITE F, GREENVILLE, NC 27858 252-355-1068

CRAVEN COMMUNITY COLLEGE
CORPORATE TRAINING CENTER
NEW BERN, NC

DRAWING TITLE
WALL SECTIONS

SCALE: 3/4" = 1'-0"	DRAWING NO: A3.1
DRAWN: MCZ	
CHECKED: JKF	
DATE: 9-1-2024	
PROJECT NO.: 2023-09	

© COPYRIGHT, JKF ARCHITECTURE PC, JOHN K. FARKAS, AIA

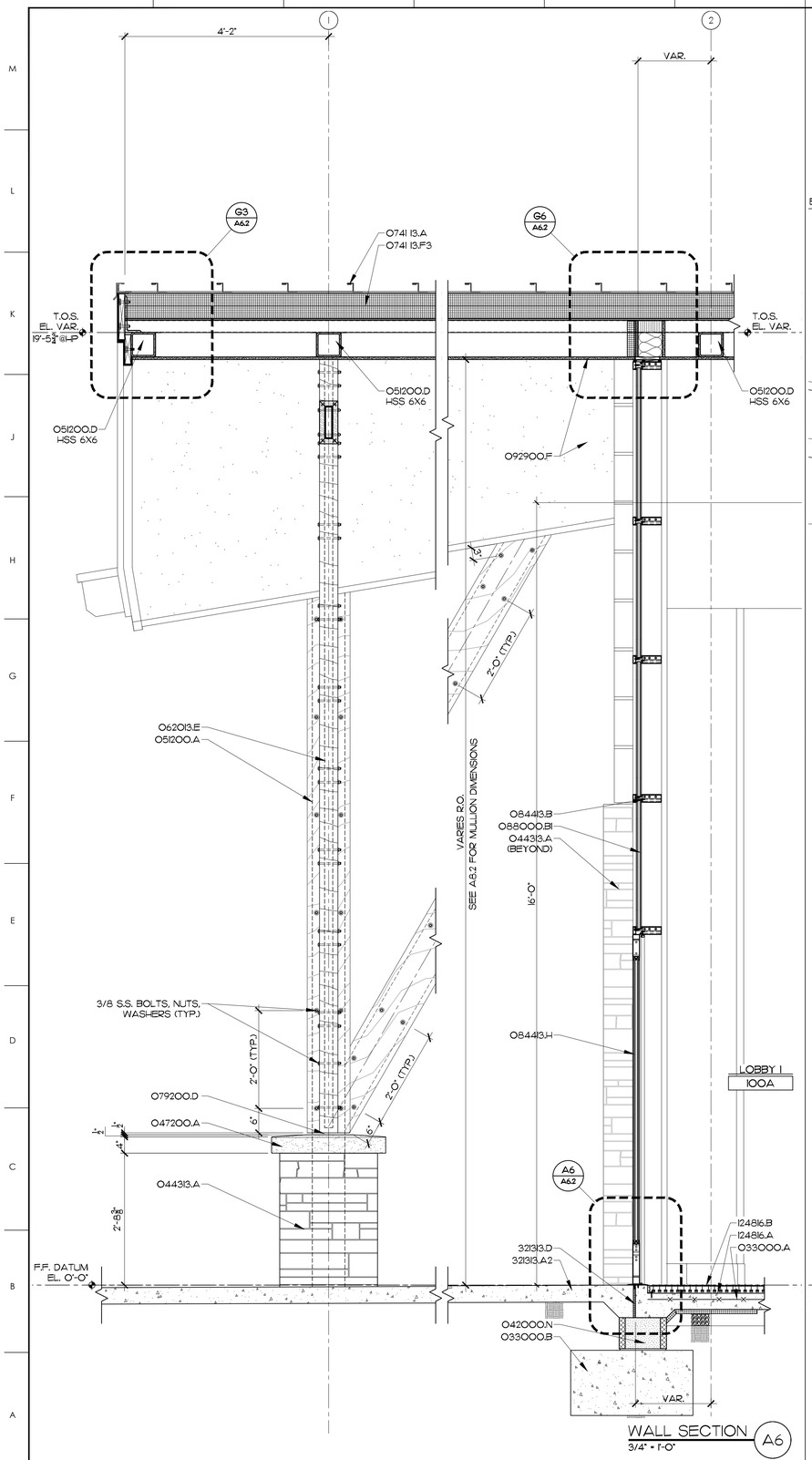

WALL SECTION A6
3/4" = 1'-0"

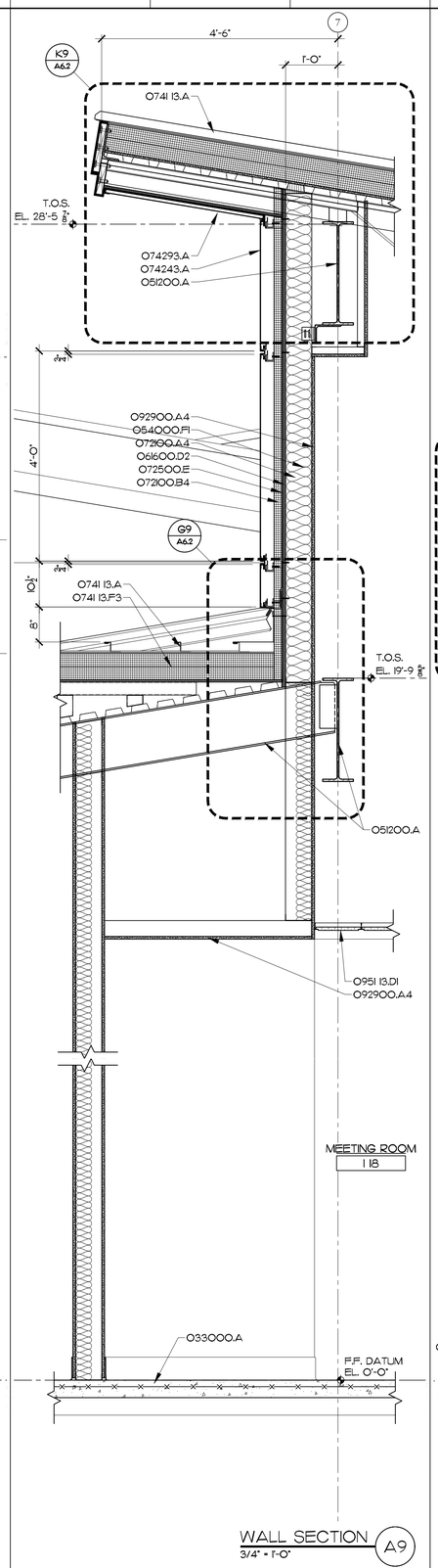

WALL SECTION A9
3/4" = 1'-0"

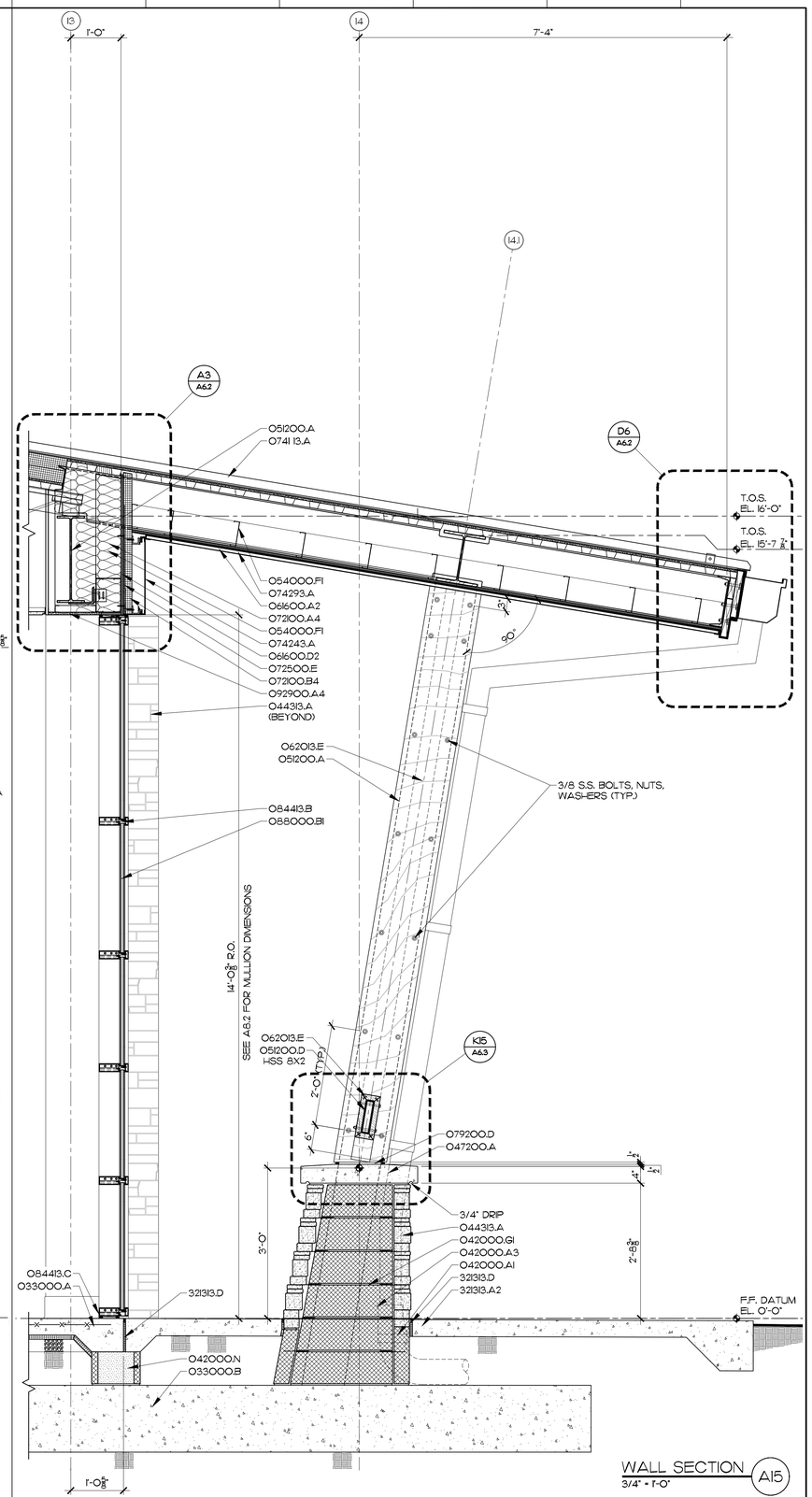

WALL SECTION A15
3/4" = 1'-0"

MATERIALS KEYING LEGEND

O33000.A	-	CONCRETE SLAB ON GRADE, SEE STRUCTURAL
O33000.B	-	CONCRETE FOOTING, SEE STRUCTURAL
O42000.AI	-	CONCRETE MASONRY UNIT, 4"
O42000.A3	-	CONCRETE MASONRY UNIT, 8"
O42000.GI	-	HORIZONTAL JOINT REINFORCING AT 16" O.C. VERT.
O42000.N	-	GROUT SOLID
O44313.A	-	ANCHORED STONE MASONRY VENEER
O47200.A	-	CAST STONE MASONRY
O51200.A	-	STRUCTURAL STEEL, SEE STRUCTURAL DRAWINGS
O51200.D	-	TUBE STEEL, SIZE AS INDICATED
O54000.FI	-	COLD FORMED METAL FRAMING, 6" STUD AT 16" O.C.
O61600.A2	-	1/2" PLYWOOD SHEATHING
O61600.D2	-	GLASS-MAT GYPSUM SHEATHING, 5/8" THICK
O63013.E	-	5/4, ROUGH CUT
O72100.A4	-	R-19 BATT INSULATION
O72100.B4	-	2" RIGID INSULATION
O72500.E	-	BUILDING WRAP
O741 13.A	-	METAL ROOF, STANDING SEAM SYSTEM
O741 13.F3	-	RIGID INSULATION, 6" THICK
O74243.A	-	COMPOSITE WALL PANEL, FLUSH PANEL W/REVEAL
O74293.A	-	METAL SOFFIT PANELS
O79200.D	-	BACKER ROD & SEALANT
O84413.B	-	ALUMINUM CURTAIN WALL FRAMING
O84413.C	-	METAL SILL PAN
O84413.H	-	ALUMINUM STILE AND RAIL DOOR
O88000.BI	-	1" INSULATING GLASS-LOW E
O92900.A4	-	5/8" GYPSUM WALLBOARD
O92900.F	-	EXTERIOR GYPSUM SOFFIT BOARD
O951 13.DI	-	ACOUSTICAL PANEL CEILING TILE, 2X2
124816.A	-	FOOT GRILLE, RECESSED
124816.B	-	LEVELING BED FRAME FOR FOOT GRILLE
321313.A2	-	CONCRETE PAVING, SEE CIVIL DRAWINGS
321313.D	-	COMPRESSIBLE FILL

KEY PLAN

SCO ID #23-26923-01A

NO	REVISION	DATE

SEAL

JOHN K. FARKAS
REGISTERED ARCHITECT
10/18/2024
5922
GREENVILLE, N.C.

JKF
ARCHITECTURE
625 LYNNDALE CT., SUITE F, GREENVILLE, NC 27858 252-355-1068

CRAVEN COMMUNITY COLLEGE
CORPORATE TRAINING CENTER
NEW BERN, NC

DRAWING TITLE
WALL SECTIONS

SCALE: 3/4" = 1'-0"	DRAWING NO: A3.2
DRAWN: MCZ	
CHECKED: JKF	
DATE: 9-1-2024	
PROJECT NO.: 2023-09	

© COPYRIGHT, JKF ARCHITECTURE PC, JOHN K. FARKAS, AIA

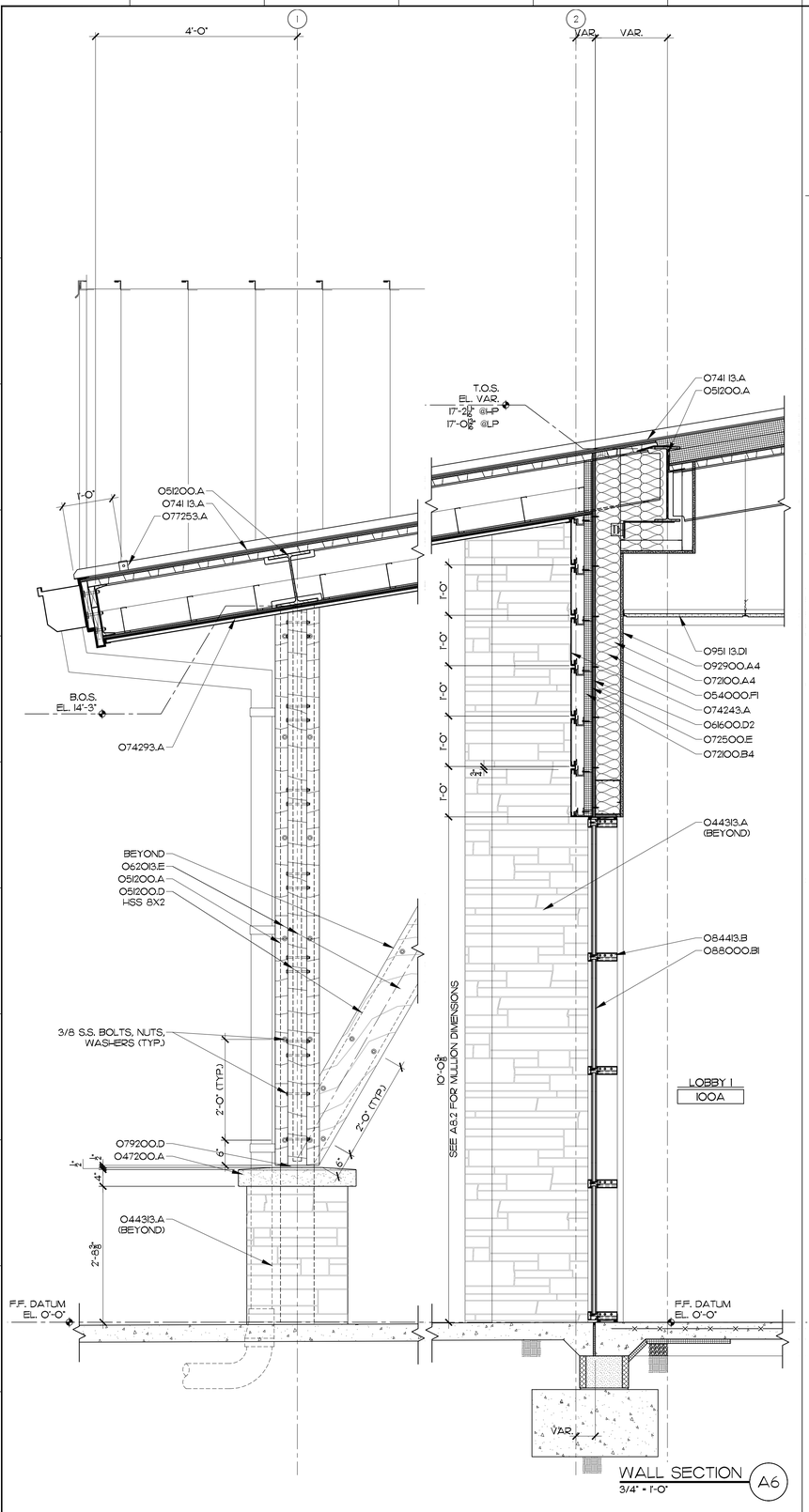

WALL SECTION A6
3/4" = 1'-0"

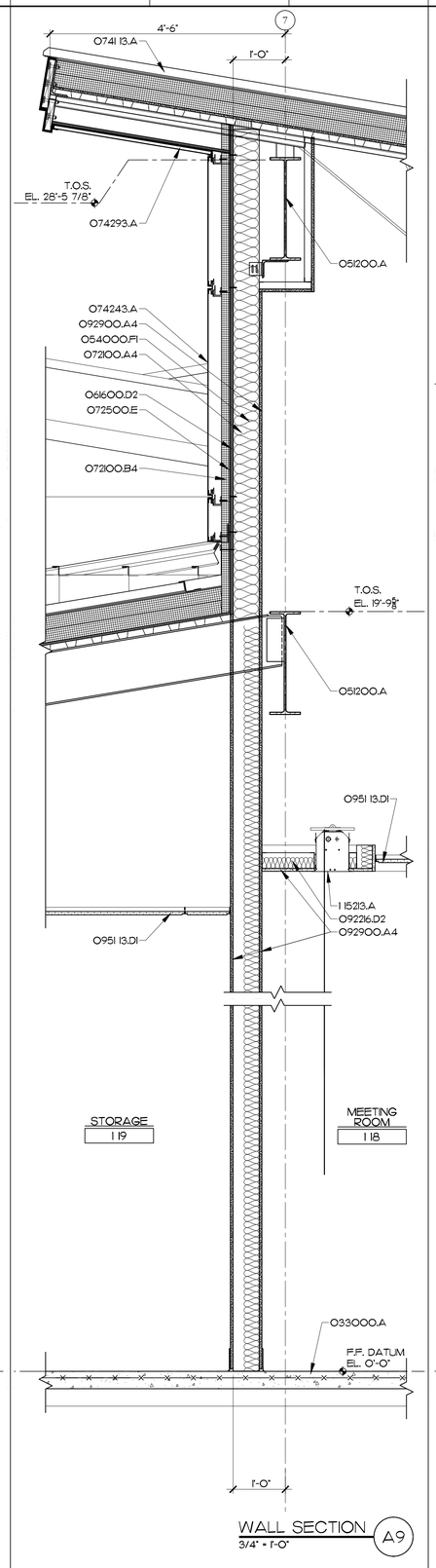

WALL SECTION A9
3/4" = 1'-0"

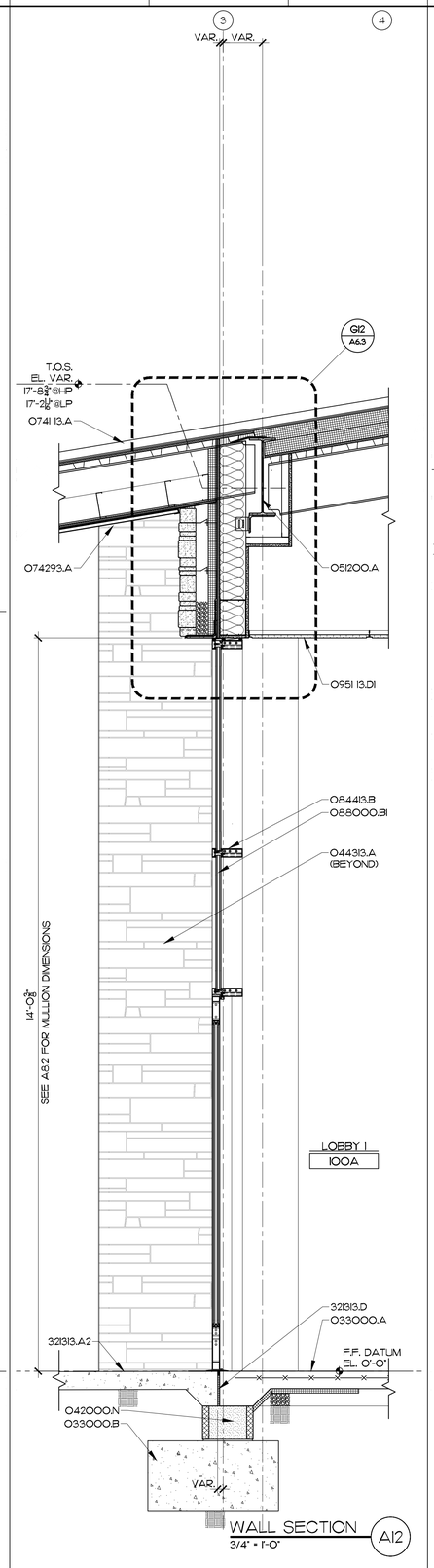

WALL SECTION A12
3/4" = 1'-0"

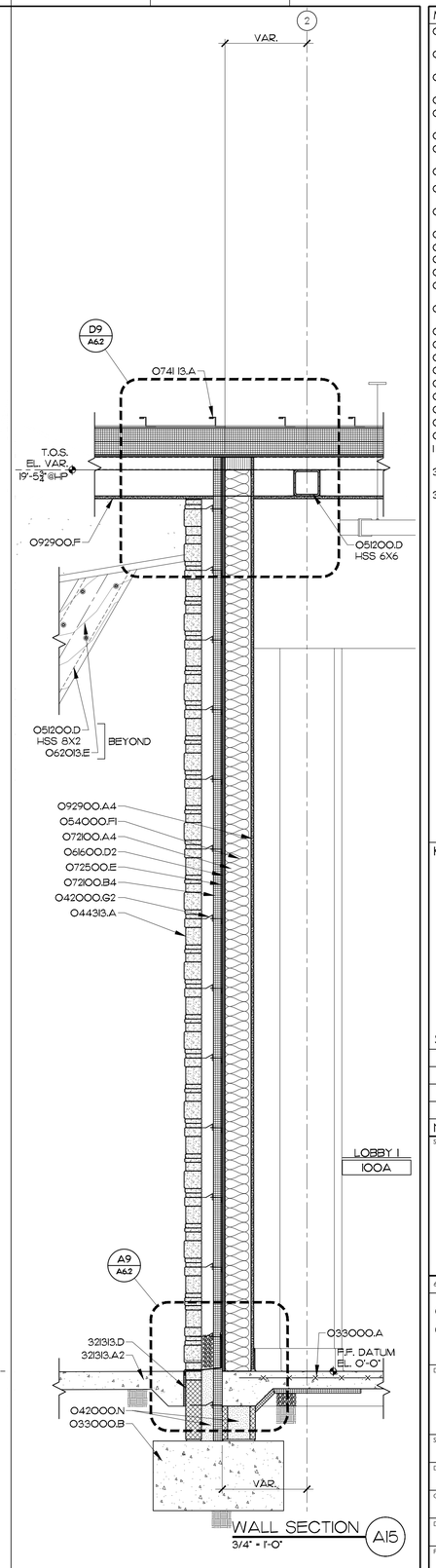

WALL SECTION A15
3/4" = 1'-0"

MATERIALS KEYING LEGEND

033000.A	- CONCRETE SLAB ON GRADE, SEE STRUCTURAL
033000.B	- CONCRETE FOOTING, SEE STRUCTURAL
042000.G2	- ADJ. BRICK TIES AT 16" OC VERT., 24" O.C. HORZ.
042000.N	- GROUT SOLID
044313.A	- ANCHORED STONE MASONRY VENEER
047200.A	- CAST STONE MASONRY
051200.A	- STRUCTURAL STEEL, SEE STRUCTURAL DRAWINGS
051200.D	- TUBE STEEL, SIZE AS INDICATED
054000.FI	- COLD FORMED METAL FRAMING, 6" STUD AT 16" O.C.
061600.D2	- GLASS-MAT GYPSUM SHEATHING, 5/8" THICK
062013.E	- 5/4, ROUGH CUT
072100.A4	- R-19 BATT INSULATION
072100.B4	- 2" RIGID INSULATION
072500.E	- BUILDING WRAP
074113.A	- METAL ROOF, STANDING SEAM SYSTEM
074243.A	- COMPOSITE WALL PANEL, FLUSH PANEL W/REVEAL
074293.A	- METAL SOFFIT PANELS
077253.A	- SNOW GUARD
079200.D	- BACKER ROD & SEALANT
084413.B	- ALUMINUM CURTAIN WALL FRAMING
085000.BI	- 1" INSULATING GLASS-LOW E
092216.D2	- 3 5/8" METAL STUDS AT 16" O.C.
092900.A4	- 5/8" GYPSUM WALLBOARD
092900.F	- EXTERIOR GYPSUM SOFFIT BOARD
095113.DI	- ACOUSTICAL PANEL CEILING TILE, 2X2
115213.A	- PROJECTION SCREEN, ELECTRICALLY OPERATED, RECESSED
321313.A2	- CONCRETE PAVING, SEE CIVIL DRAWINGS
321313.D	- COMPRESSIBLE FILL

KEY PLAN

SCO ID #23-26923-01A

NO	REVISION	DATE

SEAL

JOHN K. FARKAS
REGISTERED ARCHITECT
GREENVILLE, N.C.
10/18/2024
5922

JKF ARCHITECTURE

625 LYNNDALE CT., SUITE F, GREENVILLE, NC 27858 252-355-1068

CRAVEN COMMUNITY COLLEGE
CORPORATE TRAINING CENTER
NEW BERN, NC

DRAWING TITLE
WALL SECTIONS

SCALE	3/4" = 1'-0"
DRAWN	MCZ
CHECKED	JKF
DATE	9-1-2024
PROJECT NO.	2023-09
DRAWING NO	A3.3

© COPYRIGHT, JKF ARCHITECTURE PC., JOHN K. FARKAS, AIA

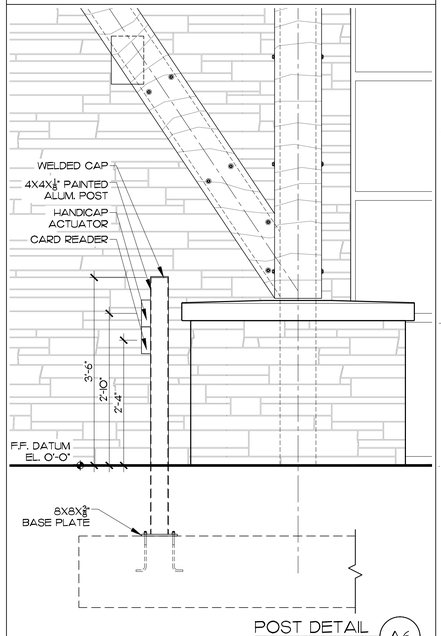

POST DETAIL A6
3/4" = 1'-0"

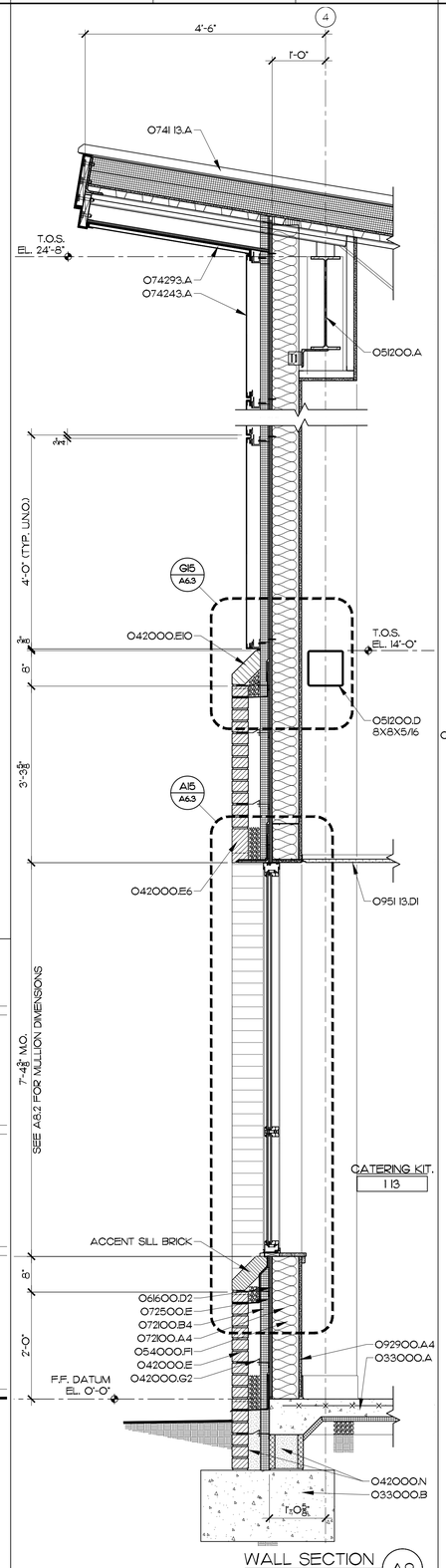

WALL SECTION A9
3/4" = 1'-0"

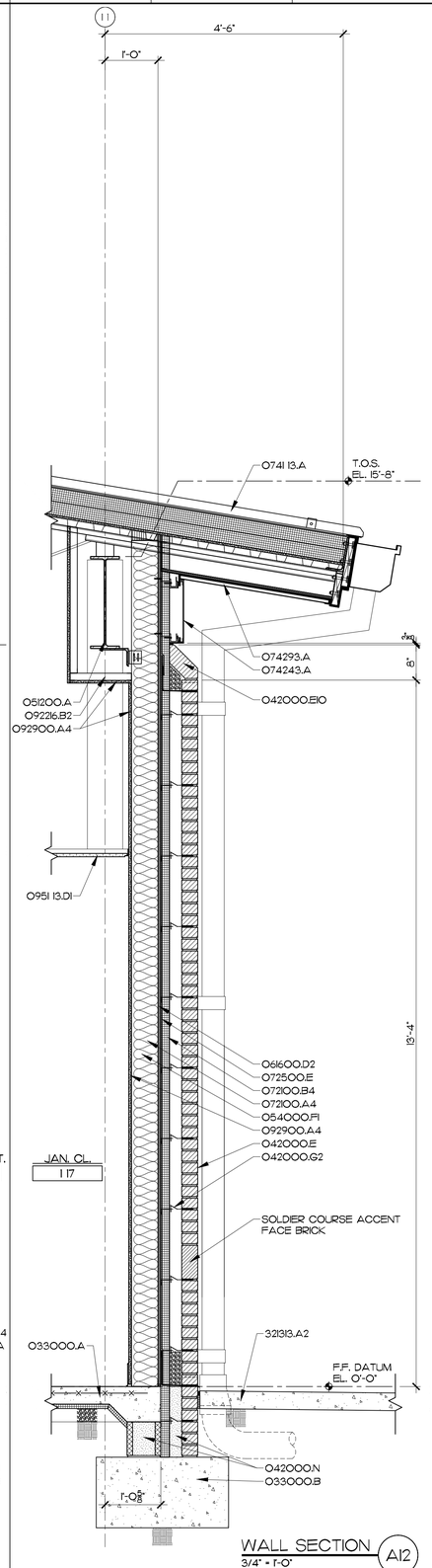

WALL SECTION A12
3/4" = 1'-0"

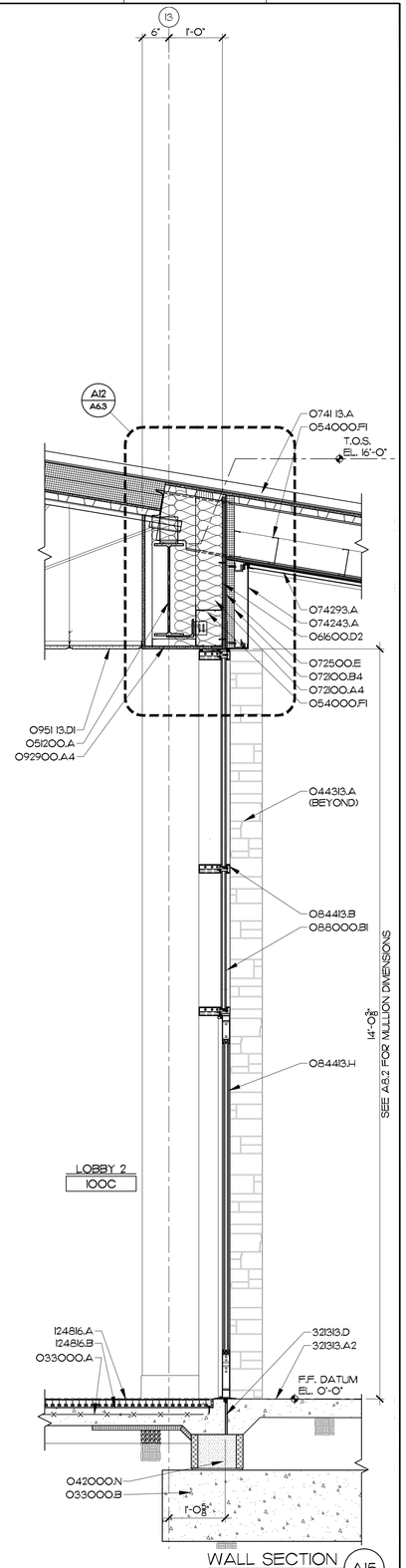

WALL SECTION A15
3/4" = 1'-0"

MATERIALS KEYING LEGEND

033000.A	- CONCRETE SLAB ON GRADE, SEE STRUCTURAL
033000.B	- CONCRETE FOOTING, SEE STRUCTURAL
042000.E	- FACE BRICK
042000.E10	- FACE BRICK, SOLDIER COURSE SILL, SPECIAL SHAPE
042000.E6	- FACE BRICK, SHELF BRICK, SOLDIER COURSE
042000.G2	- ADJ. BRICK TIES AT 16" OC VERT., 24" O.C. HORIZ.
042000.N	- GROUT SOLID
044313.A	- ANCHORED STONE MASONRY VENEER
051200.A	- STRUCTURAL STEEL, SEE STRUCTURAL DRAWINGS
051200.D	- TUBE STEEL, SIZE AS INDICATED
054000.F1	- COLD FORMED METAL FRAMING, 6" STUD AT 16" O.C.
061600.D2	- GLASS-MAT GYPSUM SHEATHING, 5/8" THICK
072100.A4	- R-19 BATT INSULATION
072100.B4	- 2" RIGID INSULATION
072500.E	- BUILDING WRAP
074113.A	- METAL ROOF, STANDING SEAM SYSTEM
074243.A	- COMPOSITE WALL PANEL, FLUSH PANEL W/REVEAL
074293.A	- METAL SOFFIT PANELS
084413.B	- ALUMINUM CURTAIN WALL FRAMING
084413.H	- ALUMINUM STILE AND RAIL DOOR
088000.B1	- 1" INSULATING GLASS-LOW E
092216.B2	- 1 5/8" METAL STUD AT 16" O.C.
092900.A4	- 5/8" GYPSUM WALLBOARD
095113.D1	- ACOUSTICAL PANEL CEILING TILE, 2X2
124816.A	- FOOT GRILLE, RECESSED
124816.B	- LEVELING BED FRAME FOR FOOT GRILLE
321313.A2	- CONCRETE PAVING, SEE CIVIL DRAWINGS
321313.D	- COMPRESSIBLE FILL

KEY PLAN

SCO ID #23-26923-01A

NO	REVISION	DATE

SEAL

JOHN K. FARKAS REGISTERED ARCHITECT GREENVILLE, NC 10/18/2024 5922

JKF ARCHITECTURE

625 LYNNDALE CT., SUITE F, GREENVILLE, NC 27858 252-355-1068

CRAVEN COMMUNITY COLLEGE
CORPORATE TRAINING CENTER
NEW BERN, NC

DRAWING TITLE: WALL SECTIONS

SCALE	3/4" = 1'-0"
DRAWN	MCZ
CHECKED	JKF
DATE	9-1-2024
PROJECT NO.	2023-09
DRAWING NO	A3.4

© COPYRIGHT, JKF ARCHITECTURE PC., JOHN K. FARKAS, AIA

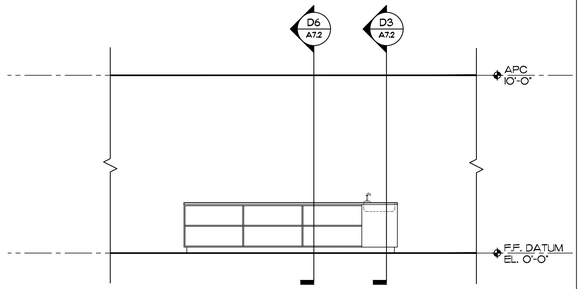

INTERIOR ELEVATION K5
1/4" = 1'-0"

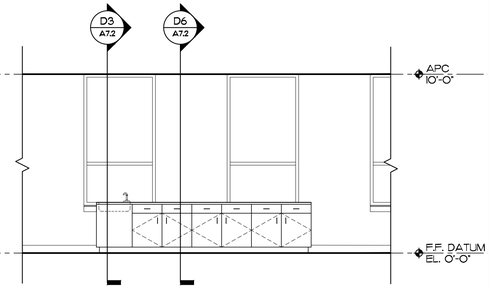

INTERIOR ELEVATION K9
1/4" = 1'-0"

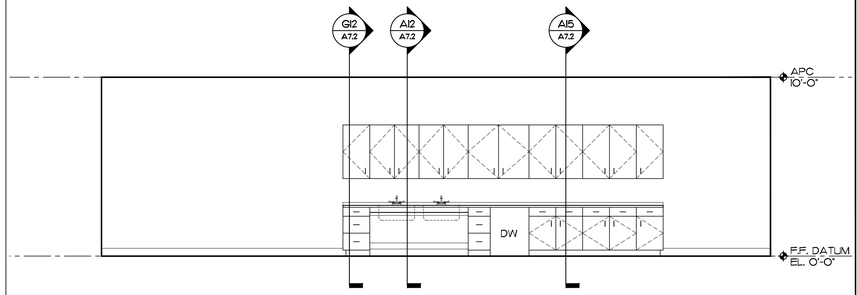

INTERIOR ELEVATION K15
1/4" = 1'-0"

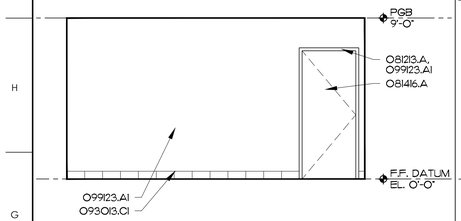

INTERIOR ELEVATION G3
1/4" = 1'-0"

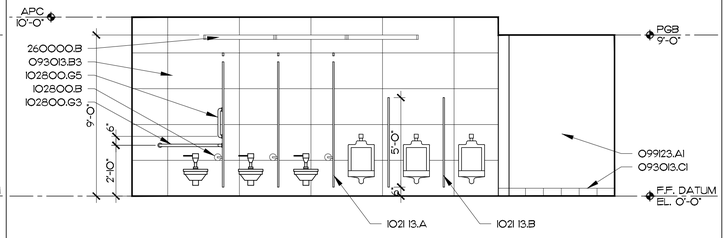

INTERIOR ELEVATION G8
1/4" = 1'-0"

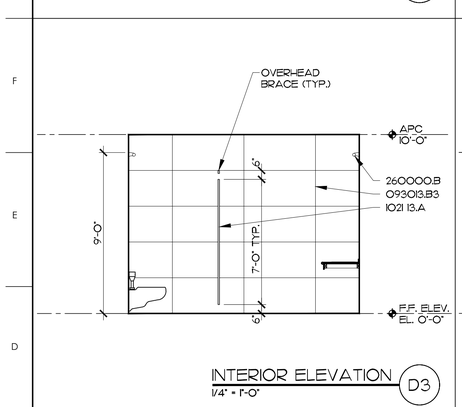

INTERIOR ELEVATION D3
1/4" = 1'-0"

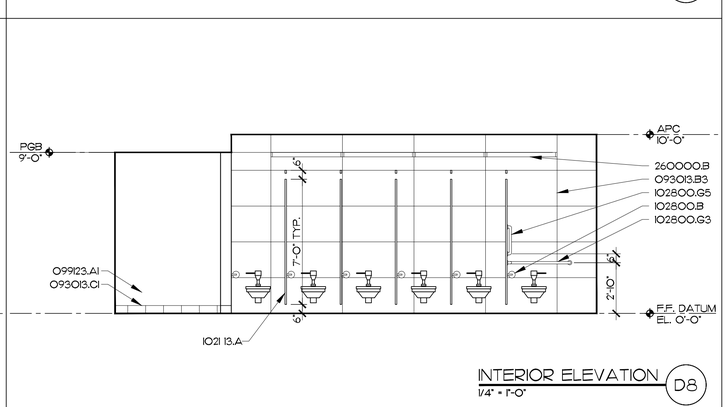

INTERIOR ELEVATION D8
1/4" = 1'-0"

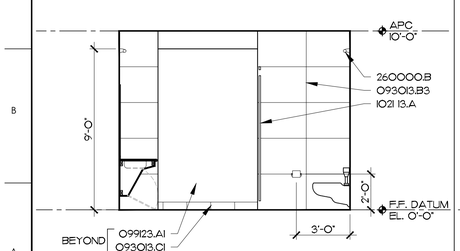

INTERIOR ELEVATION A3
1/4" = 1'-0"

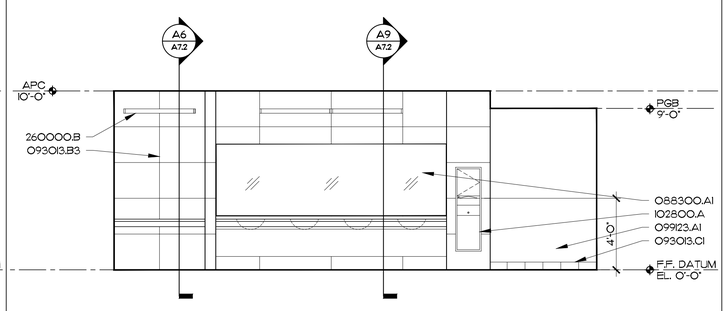

INTERIOR ELEVATION A8
1/4" = 1'-0"

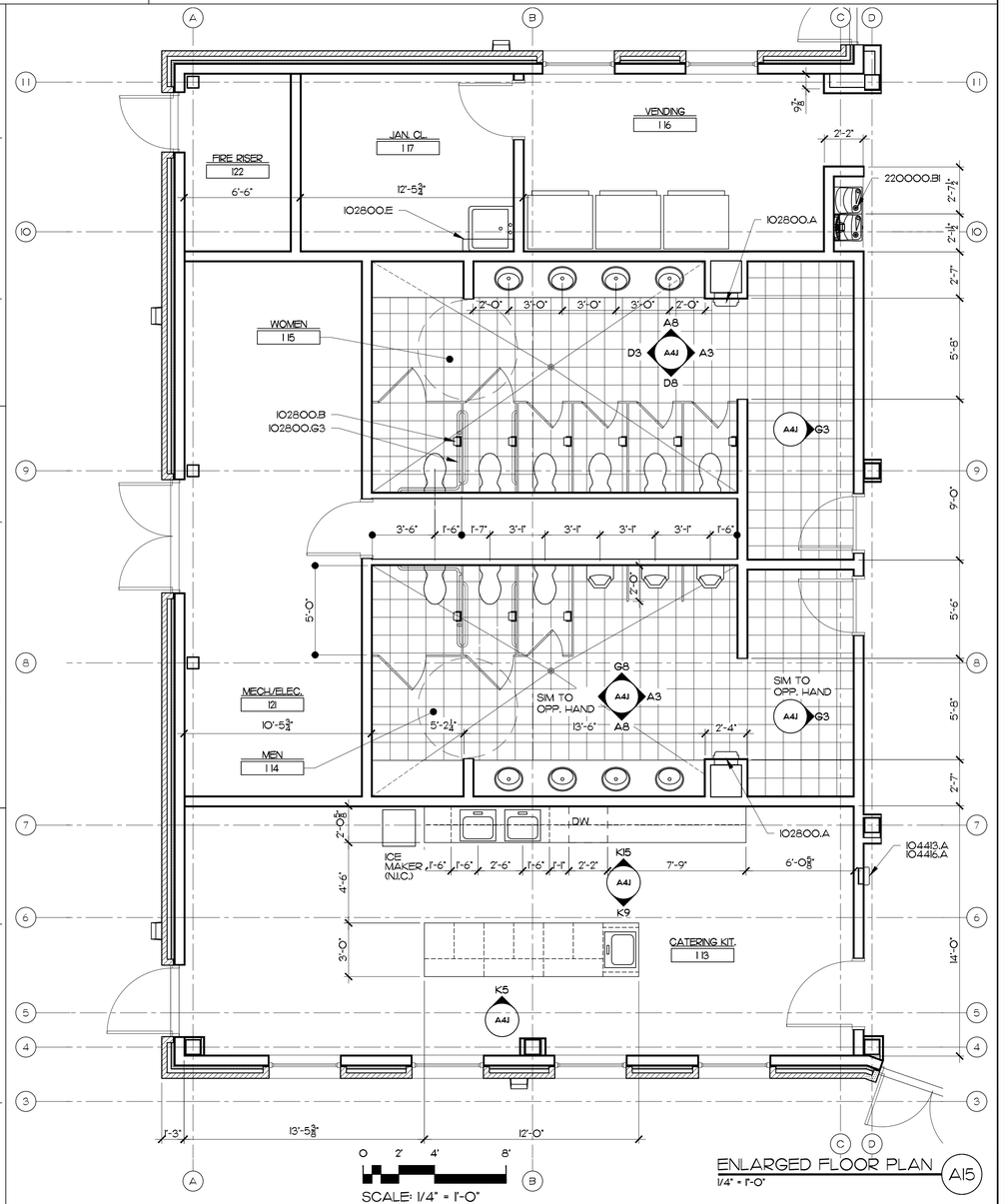

ENLARGED FLOOR PLAN A15
1/4" = 1'-0"

MATERIALS KEYING LEGEND

081213.A	- HOLLOW METAL FRAME
081416.A	- SOLID CORE WOOD DOOR, FLUSH
088300.A1	- 1/4" MIRROR UNIT
093013.B3	- CERAMIC TILE, 24X24
093013.CI	- CERAMIC TILE, SPECIAL SHAPE, COVE BASE
099123.AI	- PAINT FINISH, INTERIOR SYSTEM
102113.A	- TOILET COMPARTMENT
102113.B	- URINAL SCREEN
104413.A	- SEMI-RECESSED FIRE EXTINGUISHER CABINET
104416.A	- FIRE EXTINGUISHER
102800.A	- TOWEL DISPENSER/WASTE RECEPTACLE
102800.B	- TOILET TISSUE DISPENSER
102800.E	- MOP AND BROOM HOLDER W/UTILITY SHELF
102800.G3	- 42X54 GRAB BAR
102800.G5	- 18" VERT. GRAB BAR
220000.BI	- WATER FOUNTAIN
260000.B	- INTERIOR LIGHT FIXTURE

GENERAL NOTES

1. INTERIOR DIMENSIONS ARE TO FACE OF STUD U.N.O. W/ DOT LEADER ✦ (FINISH)
2. CERAMIC TILE WALLS, ALIGN WALL GROUT JOINTS WITH FLOOR GROUT JOINTS (TYP.)

KEY PLAN

SCO ID #23-26923-01A

NO	REVISION	DATE

SEAL

JOHN K. FARKAS
REGISTERED ARCHITECT
GREENVILLE, N
5922
7/18/2024

JKF ARCHITECTURE

625 LYNNDALE CT., SUITE F, GREENVILLE, NC 27858 252-355-1068

CRAVEN COMMUNITY COLLEGE
CORPORATE TRAINING CENTER
NEW BERN, NC

DRAWING TITLE
ENLARGED PLANS,
INTERIOR ELEVATIONS

SCALE	1/4" = 1'-0"
DRAWN	MBD
CHECKED	JKF
DATE	9-1-2024
PROJECT NO.	2023-09

DRAWING NO
A4.1

© COPYRIGHT, JKF ARCHITECTURE PC, JOHN K. FARKAS, AIA

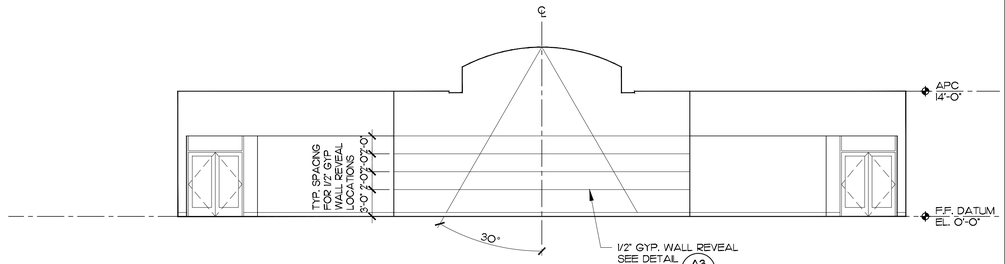

INTERIOR ELEVATION K9
1/8" = 1'-0"

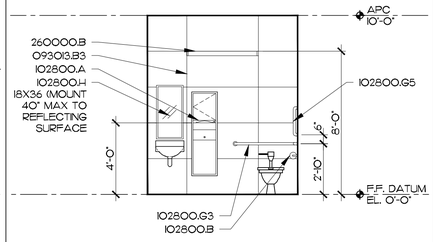

INTERIOR ELEVATION K12
1/4" = 1'-0"

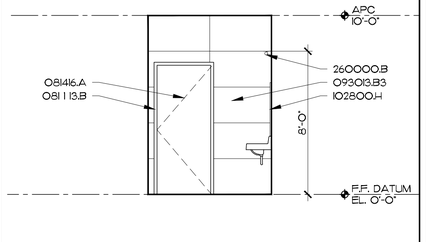

INTERIOR ELEVATION K15
1/4" = 1'-0"

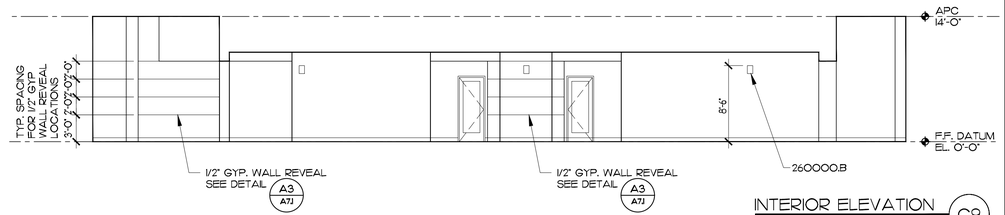

INTERIOR ELEVATION G9
1/8" = 1'-0"

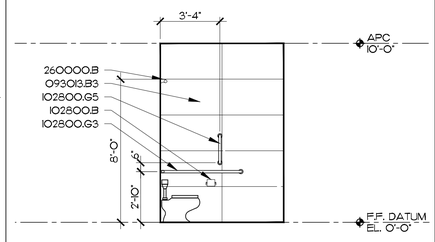

INTERIOR ELEVATION G12
1/4" = 1'-0"

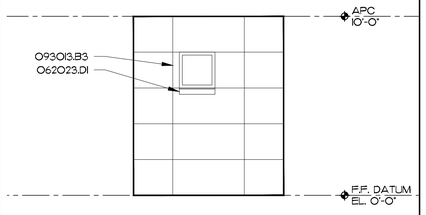

INTERIOR ELEVATION G15
1/4" = 1'-0"

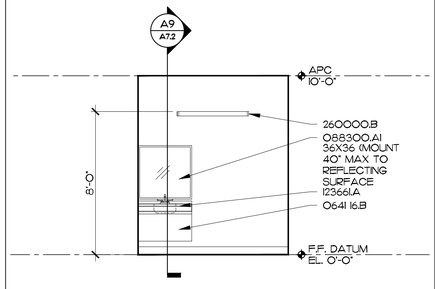

INTERIOR ELEVATION D9
1/4" = 1'-0"

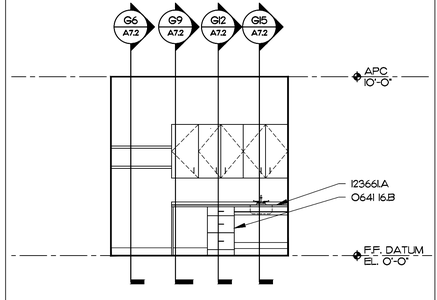

INTERIOR ELEVATION A9
1/4" = 1'-0"

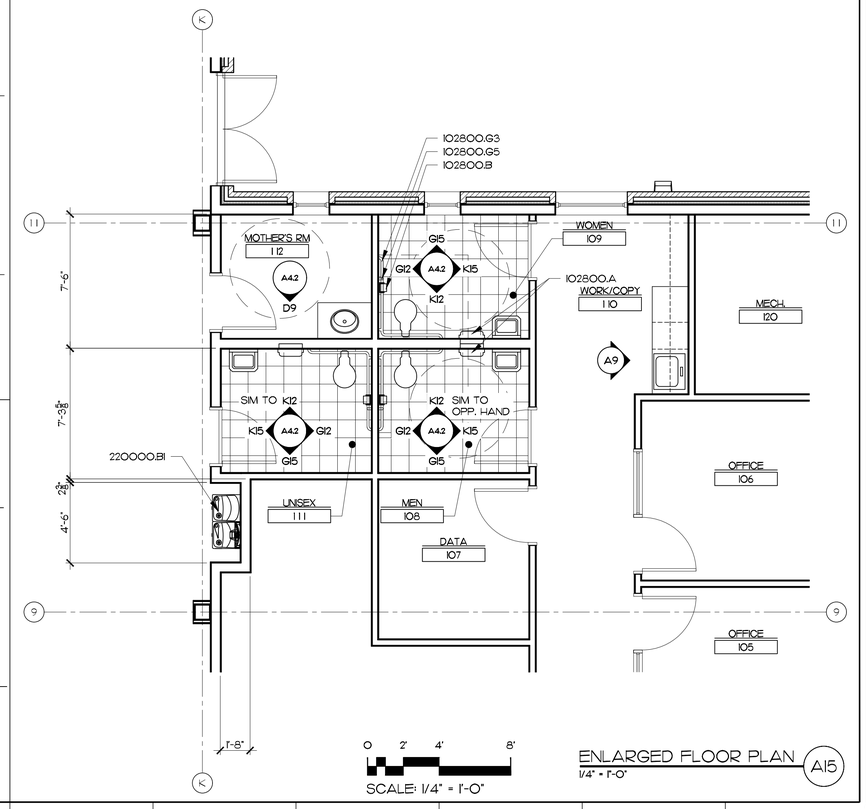

ENLARGED FLOOR PLAN A15
1/4" = 1'-0"

MATERIALS KEYING LEGEND

062023.D1	- INTERIOR WOOD TRIM, APRON, TRANSPARENT FINISH
0641 16.B	- PLASTIC LAMINATE, 3/4" THICK
0811 13.B	- HOLLOW METAL FRAME
081416.A	- SOLID CORE WOOD DOOR, FLUSH
088300.A1	- 1/4" GLASS MIRROR
093013.B3	- CERAMIC TILE, 24X24
102800.A	- TOWEL DISPENSER/WASTE RECEPTACLE
102800.B	- TOILET TISSUE DISPENSER
102800.G3	- 42X54 GRAB BAR
102800.G5	- 18" VERT. GRAB BAR
102800.H	- MIRROR UNIT, 18X36 (MOUNT 40" MAX TO REFLECTING SURFACE)
123661.A	- SIMULATED STONE COUNTERTOP
220000.B1	- WATER FOUNTAIN
260000.B	- INTERIOR LIGHT FIXTURE

GENERAL NOTES

1. INTERIOR DIMENSIONS ARE TO FACE OF STUD U.N.O. W/ DOT LEADER ✦ (FINISH)
2. CERAMIC TILE WALLS, ALIGN WALL GROUT JOINTS WITH FLOOR GROUT JOINTS (TYP.)

KEY PLAN

SCO ID #23-26923-01A

NO	REVISION	DATE

SEAL

JOHN K. FARKAS REGISTERED ARCHITECT 5922 GREENVILLE, N. CAROLINA 10/18/2024

JKF ARCHITECTURE

625 LYNNDALE CT., SUITE F, GREENVILLE, NC 27858 252-355-1068

CRAVEN COMMUNITY COLLEGE
CORPORATE TRAINING CENTER
NEW BERN, NC

DRAWING TITLE
ENLARGED PLANS, INTERIOR ELEVATIONS

SCALE	AS NOTED
DRAWN	MBD
CHECKED	JKF
DATE	9-1-2024
PROJECT NO.	2023-09
DRAWING NO	A4.2

© COPYRIGHT, JKF ARCHITECTURE PC, JOHN K. FARKAS, AIA

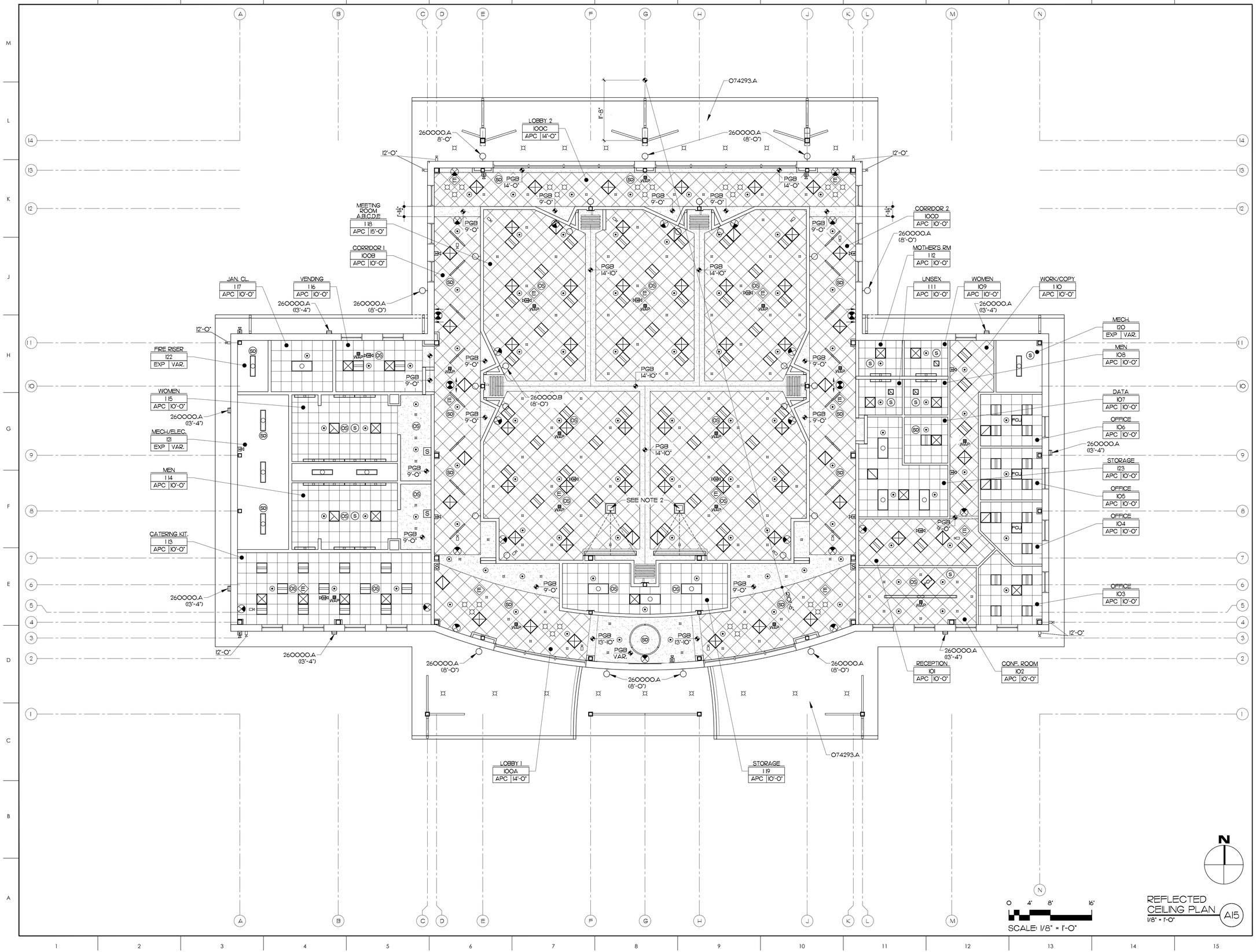

SCALE: 1/8" = 1'-0"

REFLECTED CEILING PLAN A15
1/8" = 1'-0"

MATERIALS KEYING LEGEND

O74293.A - METAL SOFFIT PANELS
260000.A - EXTERIOR LIGHT FIXTURE
260000.B - INTERIOR LIGHT FIXTURE

GENERAL NOTES

1. INTERIOR DIMENSIONS ARE TO FACE OF STUD U.N.O. W/ DOT LEADER ✦ (FINISH)
2. CEILING-RECESSED PROJECTOR LIFT, 23¾ X 23¾, 24¾ DOWN TRAVEL, 35 LB CAPACITY, 110-120V, 60HZ, INSTANT REVERSIBLE, LIFETIME LUBRICATED, INTERNAL THERMAL OVERLOAD PROTECTOR & BRAKE. FACTORY SET LIMIT SWITCHES, SCISSOR ARM FOR STABILIZATION, AUTO STOP TRAVEL AT OPEN & CLOSED, FINISH TO MATCH APC GRID.
3. LIGHT FIXTURE DIMENSIONS ARE TO TOP OF FIXTURE.

KEY PLAN

SCO ID #23-26923-01A

NO	REVISION	DATE

SEAL
JOHN K. FARKAS REGISTERED ARCHITECT 10/18/2024 5922 GREENVILLE, N.C.

JKF ARCHITECTURE

625 LYNNDALE CT., SUITE F, GREENVILLE, NC 27858 252-355-1068

CRAVEN COMMUNITY COLLEGE
CORPORATE TRAINING CENTER
NEW BERN, NC

DRAWING TITLE
REFLECTED CEILING PLAN

SCALE	1/8" = 1'-0"
DRAWN	MBD
CHECKED	JKF
DATE	9-1-2024
PROJECT NO.	2023-09

DRAWING NO
A5.1

© COPYRIGHT, JKF ARCHITECTURE PC, JOHN K. FARKAS, AIA

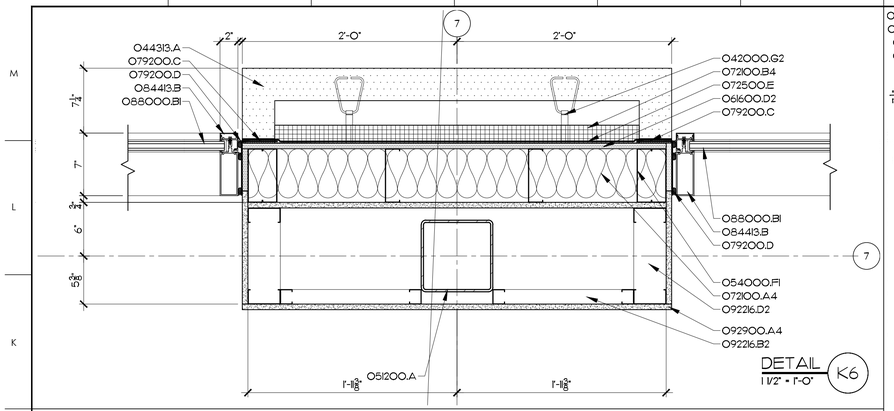

DETAIL K6
1 1/2" = 1'-0"

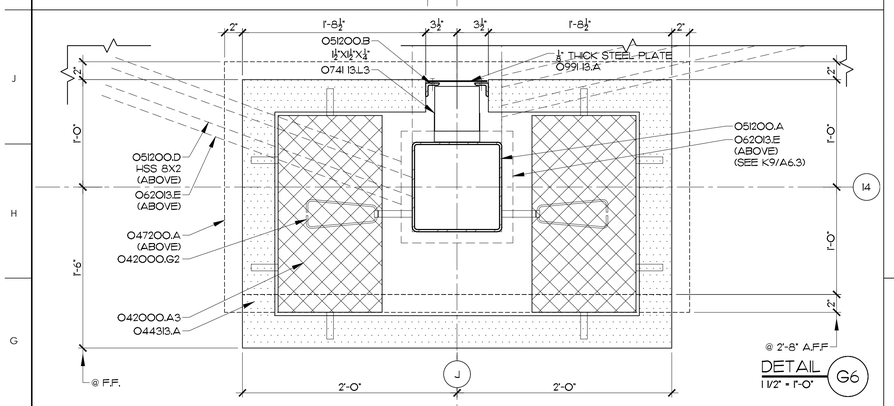

DETAIL G6
1 1/2" = 1'-0"

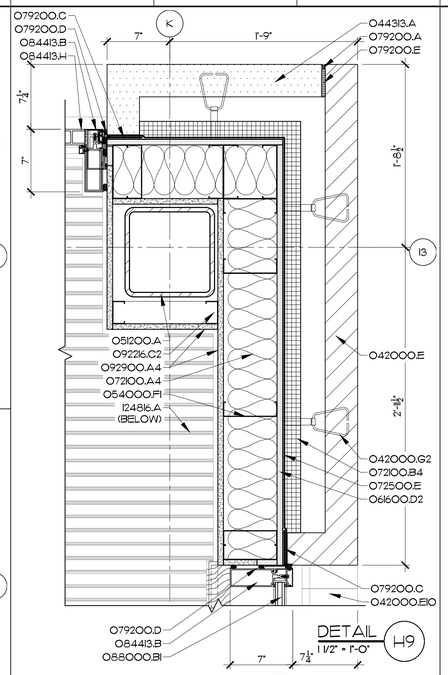

DETAIL H9
1 1/2" = 1'-0"

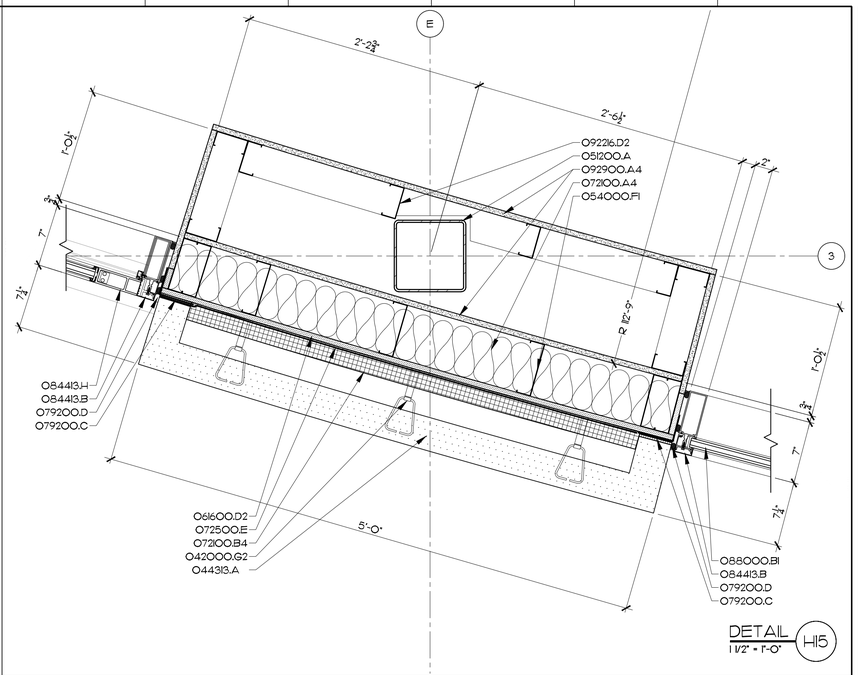

DETAIL H15
1 1/2" = 1'-0"

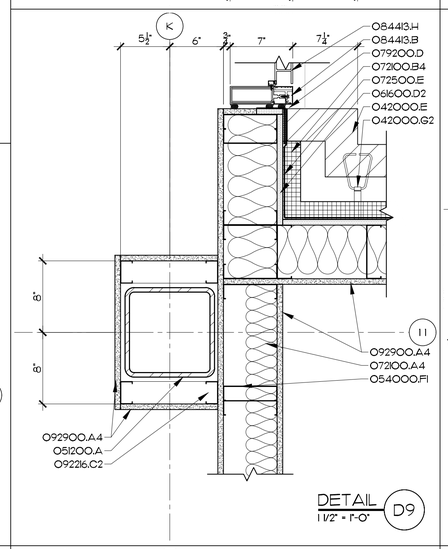

DETAIL D9
1 1/2" = 1'-0"

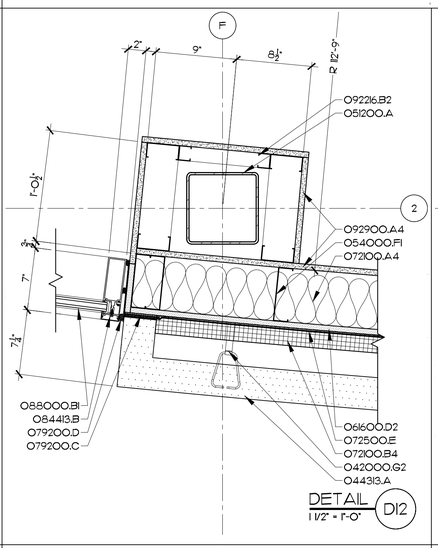

DETAIL D12
1 1/2" = 1'-0"

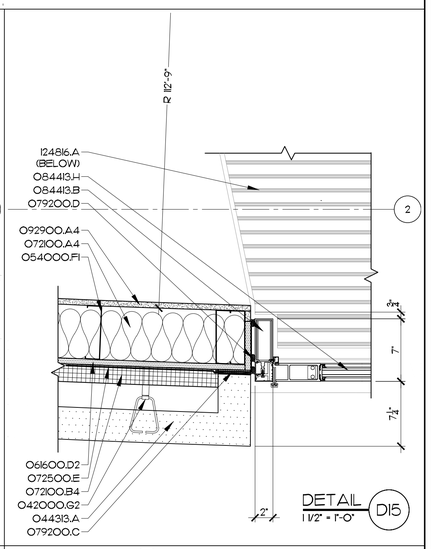

DETAIL D15
1 1/2" = 1'-0"

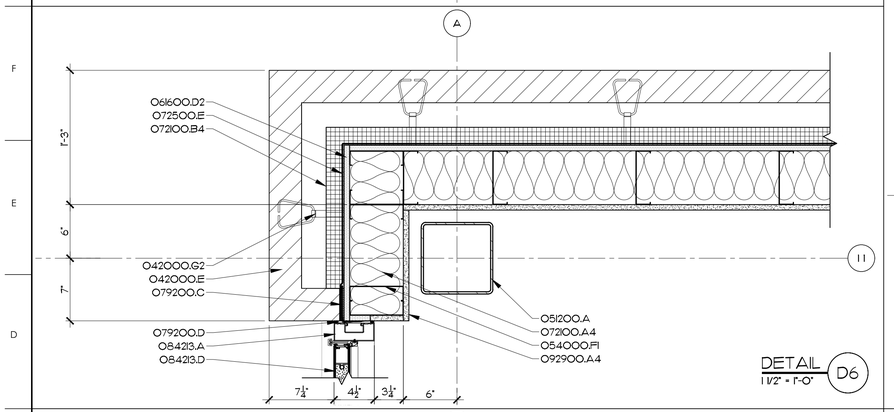

DETAIL D6
1 1/2" = 1'-0"

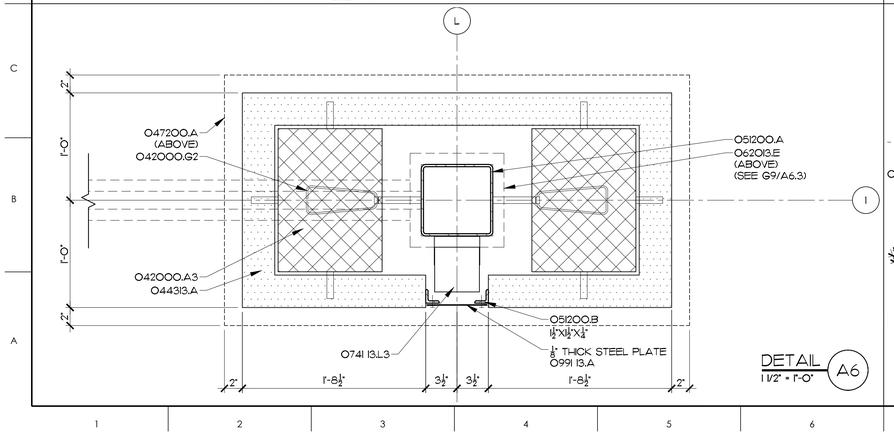

DETAIL A6
1 1/2" = 1'-0"

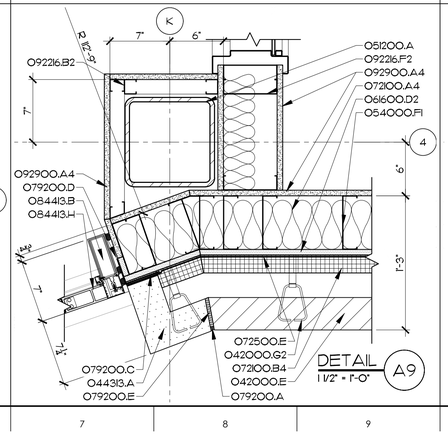

DETAIL A9
1 1/2" = 1'-0"

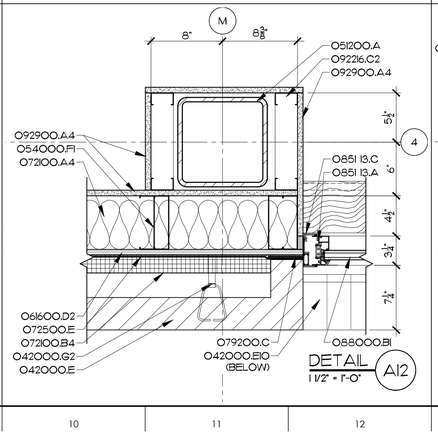

DETAIL A12
1 1/2" = 1'-0"

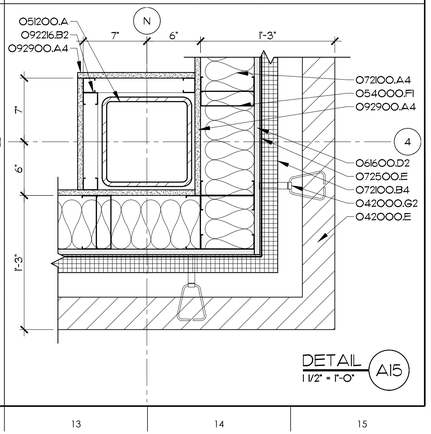

DETAIL A15
1 1/2" = 1'-0"

MATERIALS KEYING LEGEND

042000.A3	- CONCRETE MASONRY UNIT, 8"
042000.E	- FACE BRICK
042000.EIO	- FACE BRICK, SOLDIER COURSE SILL, SPECIAL SHAPE
042000.G2	- ADJ. BRICK TIES AT 16" OC VERT., 24" O.C. HORIZ.
044313.A	- ANCHORED STONE MASONRY VENEER
047200.A	- CAST STONE MASONRY
051200.A	- STRUCTURAL STEEL, SEE STRUCTURAL DRAWINGS
051200.B	- STEEL ANGLE, SIZE AS INDICATED
051200.D	- TUBE STEEL, SIZE AS INDICATED
054000.FI	- COLD FORMED METAL FRAMING, 6" STUD AT 16" O.C.
061600.D2	- GLASS-MAT GYPSUM SHEATHING, 5/8" THICK
062013.E	- 5/4, ROUGH CUT
072100.A4	- R-19 BATT INSULATION
072100.B4	- 2" RIGID INSULATION
072500.E	- BUILDING WRAP
074113.L3	- METAL DOWNSPOUT, 5X5
079200.A	- SEALANT
079200.C	- COMPRESSIBLE SEALER W/ADHESIVE
079200.D	- BACKER ROD & SEALANT
079200.E	- COMPRESSIVE FILL
084213.A	- STOREFRONT FRAMING, THERMALLY BROKEN
084213.D	- ALUMINUM FRP DOOR
084413.B	- ALUMINUM CURTAIN WALL FRAMING
084413.H	- ALUMINUM STILE AND RAIL DOOR
085113.A	- ALUMINUM WINDOW ASSEMBLY
085113.C	- METAL SUB FRAME
088000.BI	- 1" INSULATING GLASS-LOW E
092216.B2	- 1-5/8" METAL STUDS AT 16" O.C.
092216.C2	- 2-1/2" METAL STUDS AT 16" O.C.
092216.D2	- 3-5/8" METAL STUDS AT 16" O.C.
092216.F2	- 6" METAL STUDS AT 16" O.C.
092900.A4	- 5/8" GYPSUM WALLBOARD
099113.A	- PAINT FINISH, EXTERIOR SYSTEM
124816.A	- FOOT GRILLE, RECESSED

GENERAL NOTES

KEY PLAN

SCO ID #23-26923-01A

NO	REVISION	DATE

SEAL

JOHN K. FARKAS REGISTERED ARCHITECT GREENVILLE, N.C. 10/18/2024 5922

JKF ARCHITECTURE
625 LYNNDALE CT., SUITE F, GREENVILLE, NC 27858 252-355-1068

CRAVEN COMMUNITY COLLEGE
CORPORATE TRAINING CENTER
NEW BERN, NC

DRAWING TITLE
EXTERIOR DETAILS

SCALE	1 1/2" = 1'-0"
DRAWN	MCZ
CHECKED	JKF
DATE	9-1-2024
PROJECT NO.	2023-09
DRAWING NO	A6.1

© COPYRIGHT, JKF ARCHITECTURE PC., JOHN K. FARKAS, AIA

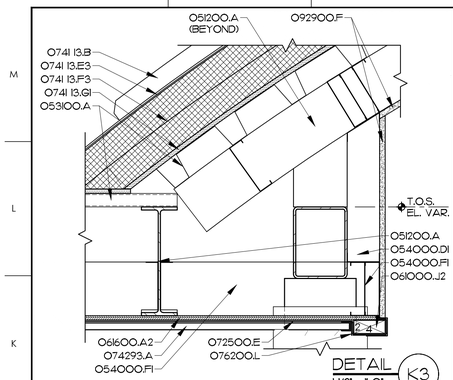

DETAIL K3
1 1/2" = 1'-0"

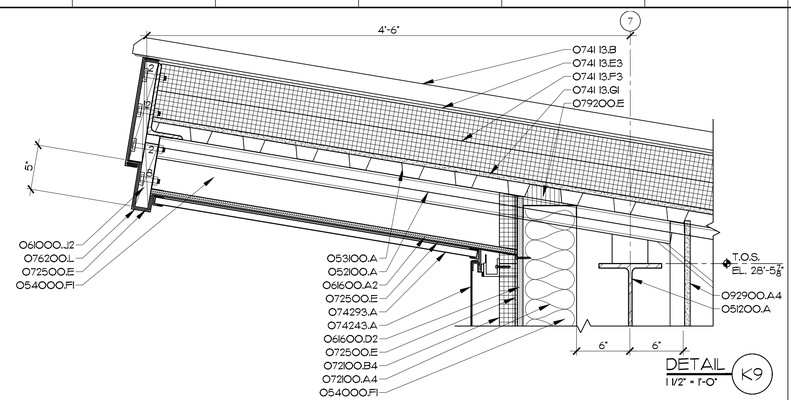

DETAIL K9
1 1/2" = 1'-0"

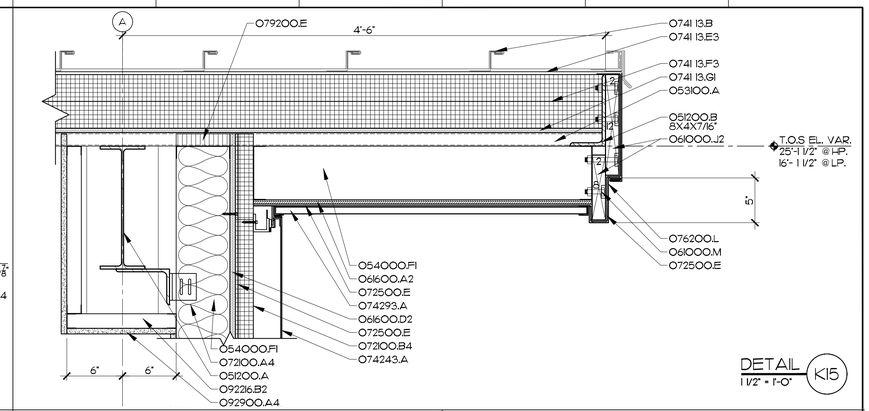

DETAIL K15
1 1/2" = 1'-0"

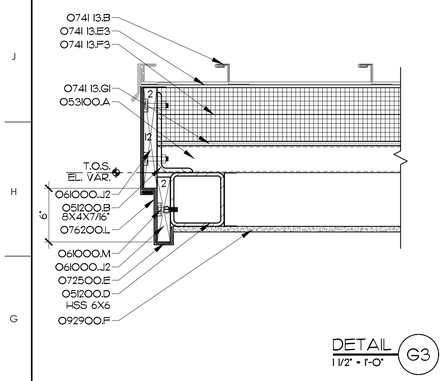

DETAIL G3
1 1/2" = 1'-0"

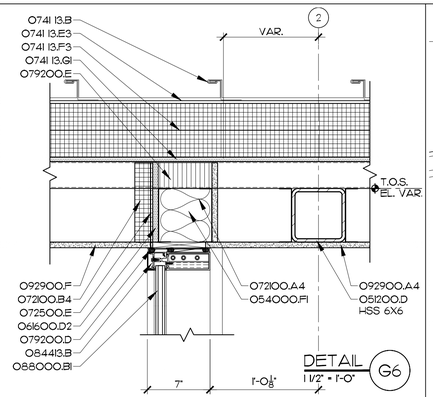

DETAIL G6
1 1/2" = 1'-0"

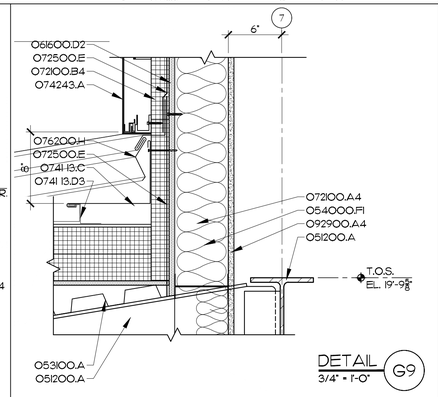

DETAIL G9
3/4" = 1'-0"

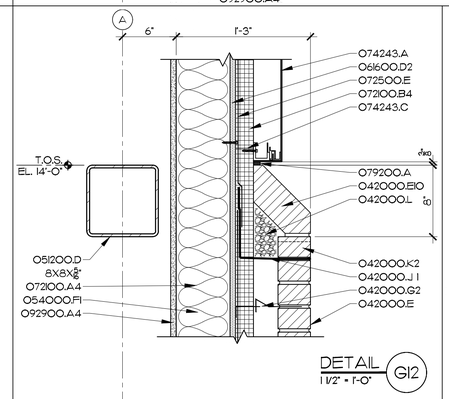

DETAIL G12
1 1/2" = 1'-0"

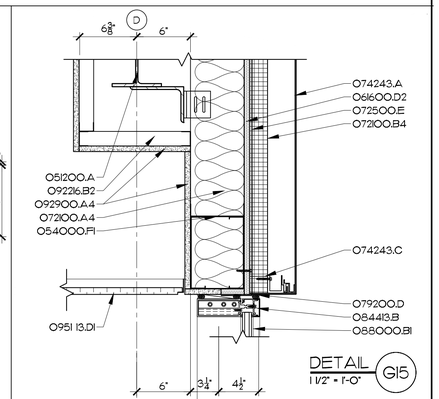

DETAIL G15
1 1/2" = 1'-0"

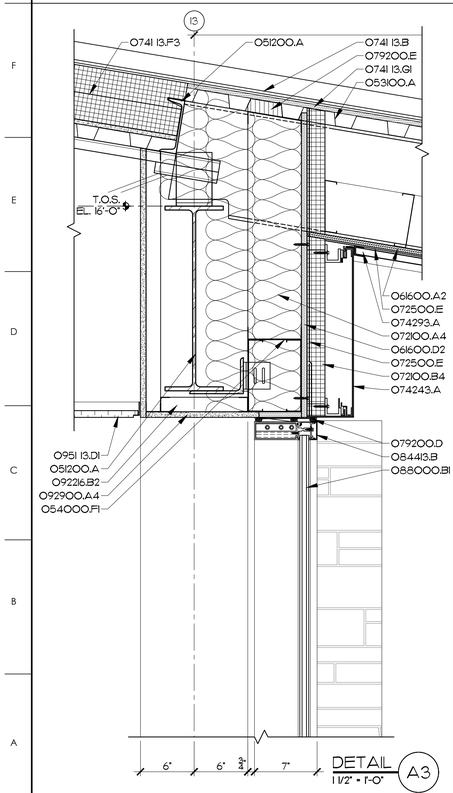

DETAIL A3
1 1/2" = 1'-0"

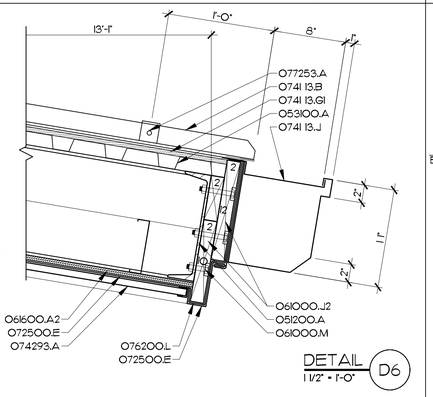

DETAIL D6
1 1/2" = 1'-0"

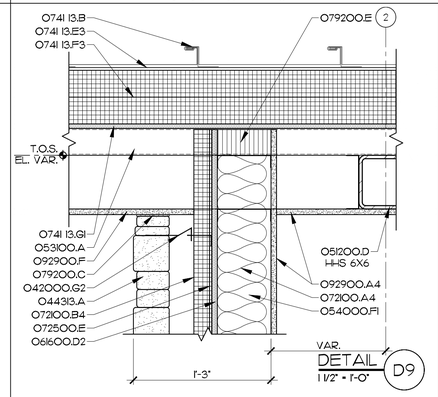

DETAIL D9
1 1/2" = 1'-0"

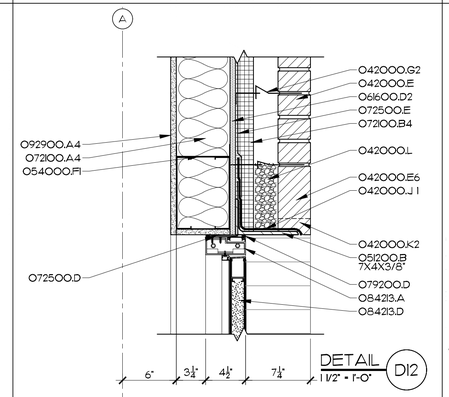

DETAIL DI2
1 1/2" = 1'-0"

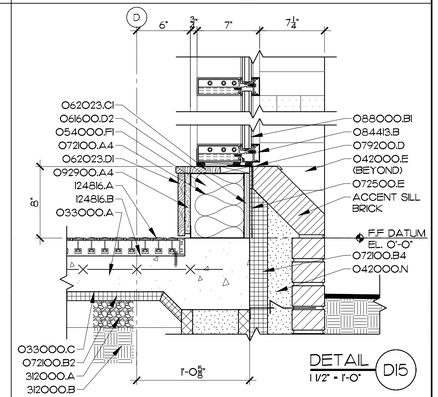

DETAIL DI5
1 1/2" = 1'-0"

DETAIL A6
1 1/2" = 1'-0"

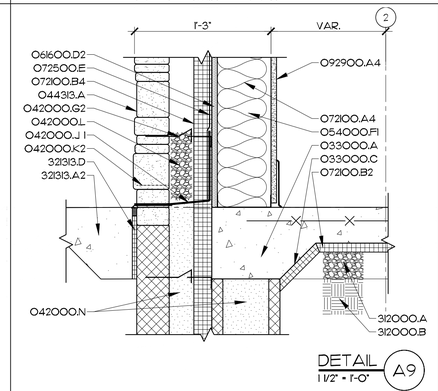

DETAIL A9
1 1/2" = 1'-0"

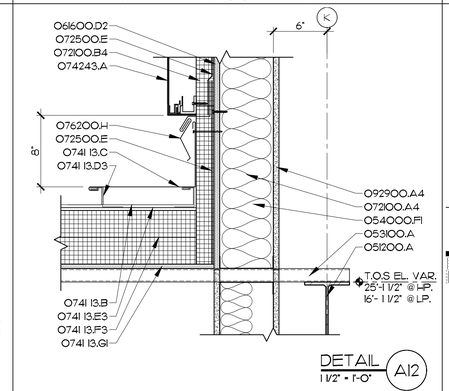

DETAIL AI2
1 1/2" = 1'-0"

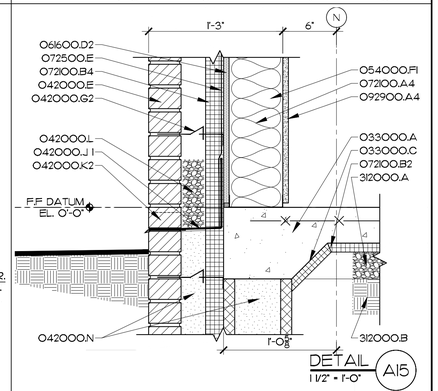

DETAIL AI5
1 1/2" = 1'-0"

MATERIALS KEYING LEGEND

O33000.A	CONCRETE SLAB ON GRADE, SEE STRUCTURAL
O33000.C	VAPOR BARRIER
O42000.E	FACE BRICK
O42000.EIO	FACE BRICK, SOLDIER COURSE SILL, SPECIAL SHAPE
O42000.E6	FACE BRICK, SHELF BRICK, SOLDIER COURSE
O42000.G2	ADJ. BRICK TIES AT 16" O.C. VERT., 24" O.C. HORIZ.
O42000.J I	THRU-WALL FABRIC FLASHING
O42000.K2	WEEP SLOTS AT 16" O.C.
O42000.L	CAVITY DRAINAGE MATERIAL
O42000.N	GROUT SOLID
O44313.A	ANCHORED STONE MASONRY VENEER
O5I200.A	STRUCTURAL STEEL, SEE STRUCTURAL DRAWINGS
O5I200.B	STEEL ANGLE, SIZE AS INDICATED
O5I200.D	TUBE STEEL, SIZE AS INDICATED
O52I00.A	STEEL BAR JOIST, SEE STRUCTURAL DRAWINGS
O53I00.A	ROOF DECK
O54000.DI	COLD FORMED METAL FRAMING, 3-5/8" STUD AT 16" O.C.
O54000.FI	COLD FORMED METAL FRAMING, 6" STUD AT 16" O.C.
O6I000..J2	WOOD BLOCKING, PRESSURE TREATED
O6I000.M	1/2" DIA. BOLT COUNTERSUNK AT 16" O.C. STAGGERED
O6I600.A2	PLYWOOD SHEATHING, 1/2" THICK
O6I600.D2	GLASS-MAT GYPSUM SHEATHING, 5/8" THICK
O62023.CI	INTERIOR WOOD TRIM, WINDOW SILL, TRANSPARENT FINISH
O62023.DI	INTERIOR WOOD TRIM, APRON, TRANSPARENT FINISH
O72I00.A4	R-19 BATT INSULATION
O72I00.B2	1" RIGID INSULATION
O72I00.B4	2" RIGID INSULATION
O725OO.E	BUILDING WRAP
O74I I3.B	METAL ROOF, STANDING SEAM PANEL
O74I I3.C	METAL FLASHING
O74I I3.D3	Z-CLOSURE TRIM W/SEALS
O74I I3.E3	SLIP SHEET
O74I I3.F3	RIGID INSULATION, 6" THICK
O74I I3.GI	GLASS-MAT GYP. SHEATHING, 1/2" THICK
O74I I3.J	METAL GUTTER
O74243.A	COMPOSITE WALL PANEL, FLUSH PANEL W/REVEAL
O74243.C	2" METAL Z-FURRING CHANNEL, 16" O.C.
O74293.A	METAL SOFFIT PANELS
O76200.H	2-PIECE METAL COUNTERFLASH
O76200.L	METAL FASCIA
O77253.A	SNOW GUARD
O792OO.A	SEALANT
O792OO.C	COMPRESSIBLE SEALER W/ADHESIVE
O792OO.D	BACKER ROD & SEALANT
O792OO.E	COMPRESSIVE FILL
O84213.A	STOREFRONT FRAMING, THERMALLY BROKEN
O84213.D	ALUMINUM FRP DOOR
O844I3.B	ALUMINUM CURTAIN WALL FRAMING
O844I3.H	ALUMINUM STILE AND RAIL DOOR
O87I00.A	THERMAL BREAK THRESHOLD, SET IN SEALANT
O88000.BI	1" INSULATING GLASS-LOW E
O92216.B2	1 5/8" METAL STUD AT 16" O.C.
O92900.A4	5/8" GYPSUM WALLBOARD
O92900.F	EXTERIOR GYPSUM SOFFIT BOARD
O95I I3.DI	ACOUSTICAL PANEL CEILING TILE, 2X2
I24816.A	FOOT GRILLE, RECESSED
I24816.B	LEVELING BED FRAME FOR FOOT GRILLE
3I2000.A	POROUS FILL
3I2000.B	COMPACTED FILL
32I3I3.A2	CONCRETE PAVING, SEE CIVIL DRAWINGS
32I3I3.D	COMPRESSIBLE FILL

GENERAL NOTES

SCO ID #23-26923-01A

NO	REVISION	DATE

SEAL
JOHN K. FARKAS
REGISTERED ARCHITECT
10/18/2024
5922
GREENVILLE, N.C.

JKF
ARCHITECTURE
625 LYNNDALE CT. SUITE F, GREENVILLE, NC 27858 252-355-1068

CRAVEN COMMUNITY COLLEGE
CORPORATE TRAINING CENTER
NEW BERN, NC

DRAWING TITLE
EXTERIOR DETAILS

SCALE	1 1/2" = 1'-0"
DRAWN	MBD
CHECKED	JKF
DATE	9-1-2024
PROJECT NO.	2023-09
DRAWING NO	A6.2

COPYRIGHT, JKF ARCHITECTURE PC, JOHN K. FARKAS, AIA

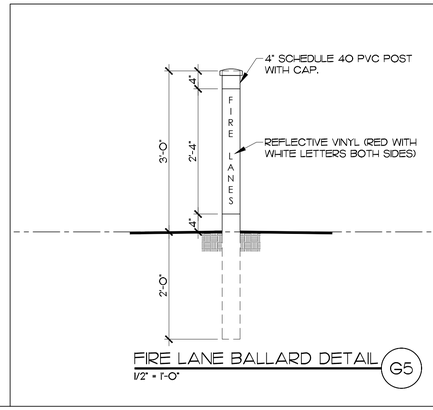

FIRE LANE BALLARD DETAIL G5
1/2" = 1'-0"

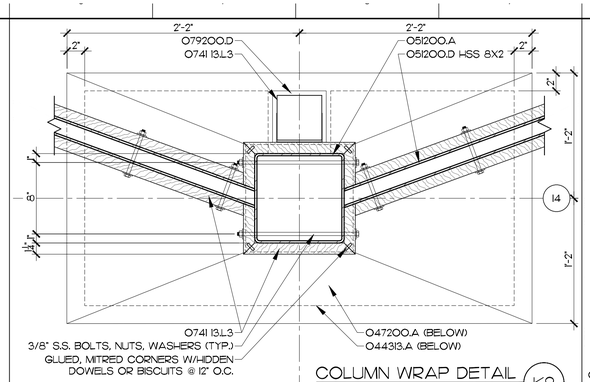

COLUMN WRAP DETAIL K9
1 1/2" = 1'-0"

*COLUMN SLOPE REMOVED FOR CLARITY.

G

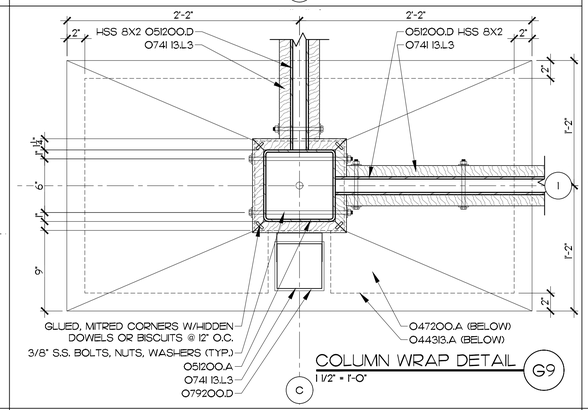

COLUMN WRAP DETAIL G9
1 1/2" = 1'-0"

C

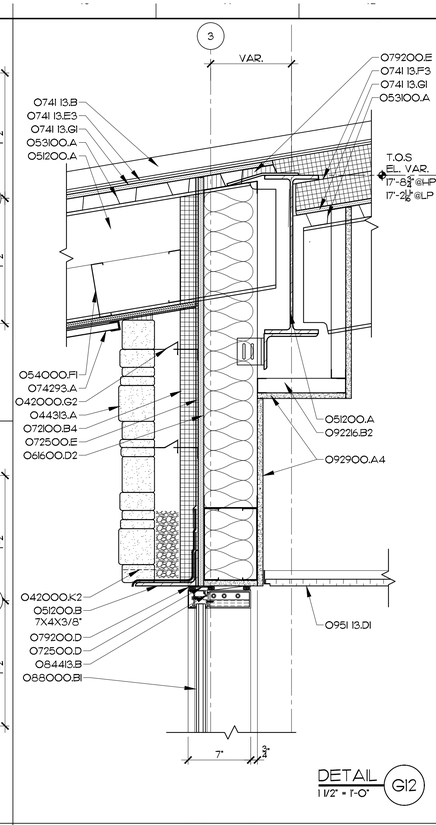

DETAIL G12
1 1/2" = 1'-0"

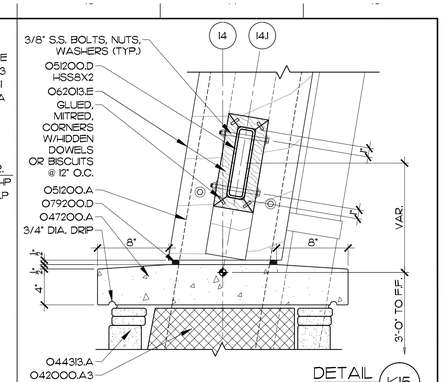

DETAIL K15
1 1/2" = 1'-0"

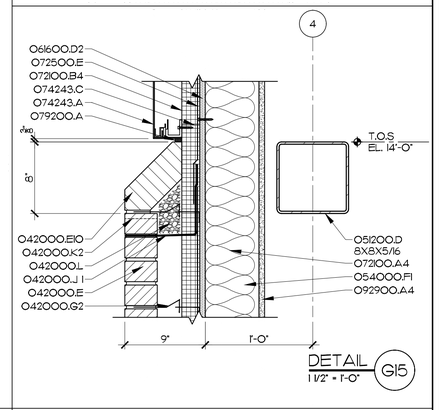

DETAIL G15
1 1/2" = 1'-0"

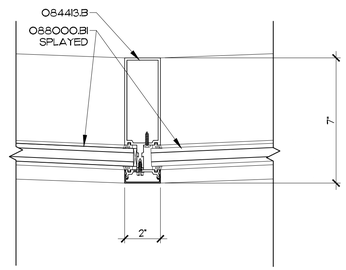

DETAIL D5
3" = 1'-0"

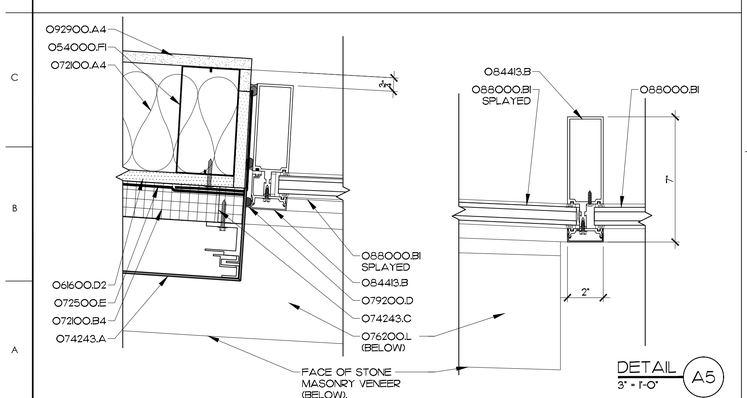

DETAIL A5
3" = 1'-0"

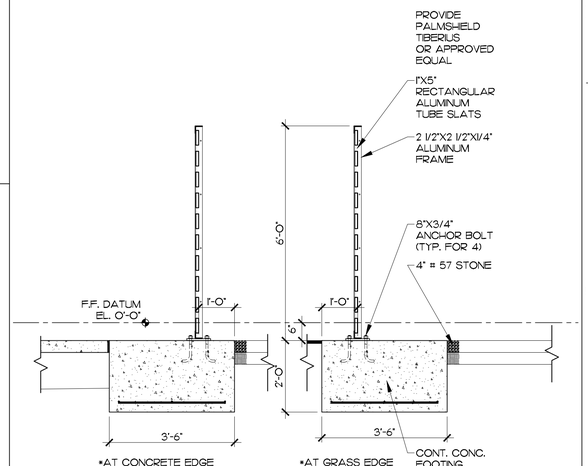

SCREEN WALL DETAIL A9
1/2" = 1'-0"

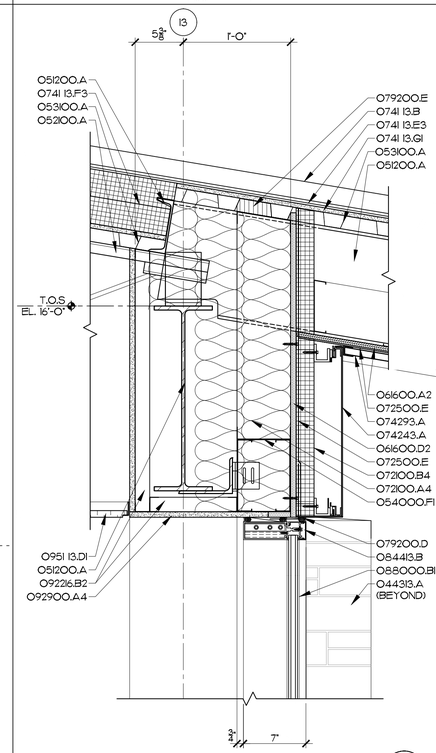

DETAIL A12
1 1/2" = 1'-0"

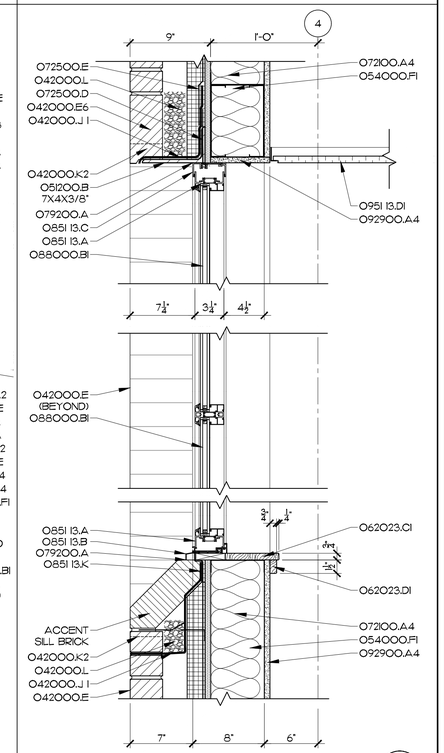

DETAIL A15
1 1/2" = 1'-0"

MATERIALS KEYING LEGEND

O42000.E	- FACE BRICK
O42000.E6	- FACE BRICK, SHELF BRICK, SOLDIER COURSE
O42000.G2	- A.D.J. BRICK TIES AT 16" OC VERT., 24" O.C. HORIZ.
O42000.J 1	- THRU-WALL FABRIC FLASHING
O42000.K2	- WEEP SLOTS AT 16" O.C.
O42000.L	- CAVITY DRAINAGE MATERIAL
O44313.A	- ANCHORED STONE MASONRY VENEER
O47200.A	- CAST STONE MASONRY
O51200.A	- STRUCTURAL STEEL, SEE STRUCTURAL DRAWINGS
O51200.B	- STEEL ANGLE, SIZE AS INDICATED
O51200.D	- TUBE STEEL, SIZE AS INDICATED
O52100.A	- STEEL BAR JOIST, SEE STRUCTURAL DRAWINGS
O53100.A	- ROOF DECK
O54000.FI	- COLD FORMED METAL FRAMING, 6" STUD AT 16" O.C.
O61600.A2	- PLYWOOD SHEATHING, 1/2" THICK
O61600.D2	- GLASS-MAT GYPSUM SHEATHING, 5/8" THICK
O62013.E	- 5/4, ROUGH CUT
O62023.CI	- INTERIOR WOOD TRIM, WINDOW SILL, TRANSPARENT FINISH
O62023.DI	- INTERIOR WOOD TRIM, APRON, TRANSPARENT FINISH
O72100.A4	- R-19 BATT INSULATION
O72100.B4	- 2" RIGID INSULATION
O72500.D	- SELF-ADHERING SHEET
O72500.E	- BUILDING WRAP
O741 13.B	- METAL ROOF, STANDING SEAM PANEL
O741 13.E3	- SLIP SHEET
O741 13.F3	- RIGID INSULATION, 6" THICK
O741 13.GI	- GLASS-MAT GYP. SHEATHING, 1/2" THICK
O741 13.L3	- METAL DOWNSPOUT, 5X5
O74243.A	- COMPOSITE WALL PANEL, FLUSH PANEL W/REVEAL
O74243.C	- 2" METAL Z-FLURRING CHANNEL, 16" O.C.
O74293.A	- METAL SOFFIT PANELS
O76200.L	- METAL FASCIA
O79200.A	- SEALANT
O79200.D	- BACKER ROD & SEALANT
O79200.E	- COMPRESSIVE FILL
O84413.B	- ALUMINUM CURTAIN WALL FRAMING
O851 13.A	- ALUMINUM WINDOW ASSEMBLY
O851 13.B	- METAL SILL PAN
O851 13.C	- METAL SUB FRAME
O851 13.K	- SELF-ADHERED FLASHING
O88000.BI	- 1" INSULATING GLASS-LOW E
O92216.B2	- 1 5/8" METAL STUD AT 16" O.C.
O92900.A4	- 5/8" GYPSUM WALLBOARD
O951 13.DI	- ACOUSTICAL PANEL CEILING TILE, 2X2

GENERAL NOTES

KEY PLAN

SCO ID #23-26923-01A

NO	REVISION	DATE

SEAL

JOHN K. FARKAS REGISTERED ARCHITECT 10/18/2024 5922 GREENVILLE, N.C.

JKF ARCHITECTURE
625 LYNNDALE CT., SUITE F, GREENVILLE, NC 27858 252-355-1068

CRAVEN COMMUNITY COLLEGE
CORPORATE TRAINING CENTER
NEW BERN, NC

DRAWING TITLE
EXTERIOR DETAILS

SCALE	AS NOTED
DRAWN	MBD
CHECKED	JKF
DATE	9-1-2024
PROJECT NO.	2023-09
DRAWING NO	A6.3

© COPYRIGHT, JKF ARCHITECTURE PC, JOHN K. FARKAS, AIA

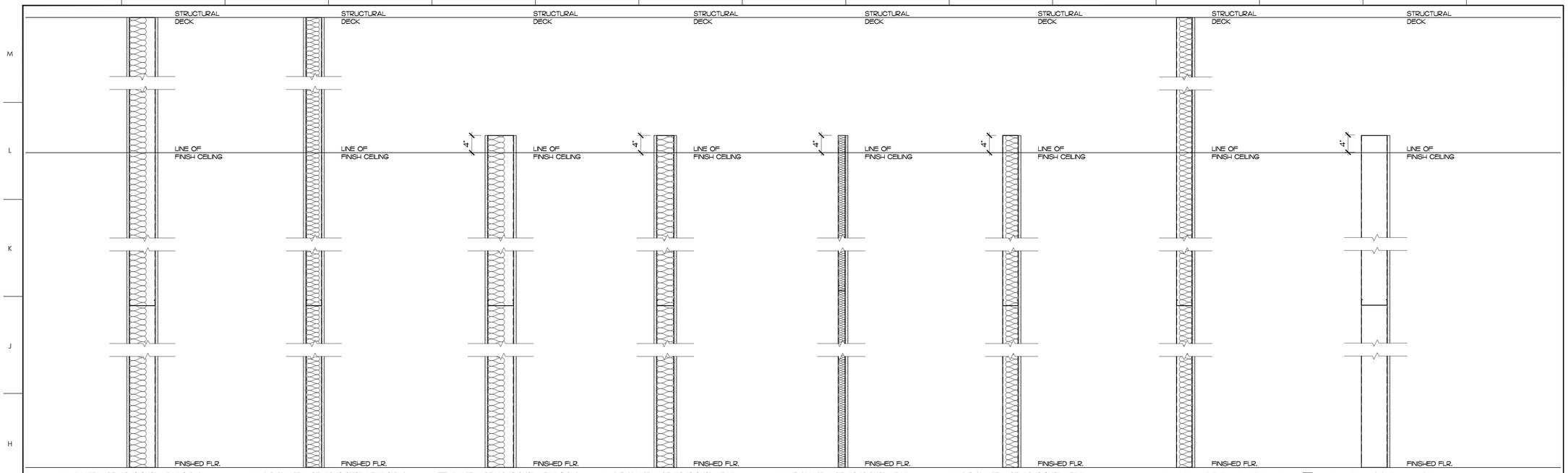

10 6" METAL STUDS (0.0179") AT 16" O.C. & 4" SOUND ATTENUATION BLANKET W/ 5/8" GYPSUM BOARD BOTH SIDES TO DECK. SEAL TIGHT TO DECK.

12 3-5/8" METAL STUDS (0.0179") AT 16" O.C. & 3" SOUND ATTENUATION BLANKET W/ 5/8" GYPSUM BOARD BOTH SIDES TO DECK. SEAL TIGHT TO DECK.

12X 3-5/8" METAL STUDS (0.0312") AT 16" O.C. & 3" SOUND ATTENUATION BLANKET W/ 5/8" TYPE 'X' GYPSUM BOARD BOTH SIDES TO DECK. ATTACH W/ 1" TYPE-S SELF-TAPPING SCREWS AT 8" O.C. EDGES, 12" O.C. FIELD BOTH SIDES. 1-1/4" MINIMUM STUD KISS, STAGGER JOINTS VERTICALLY & HORIZONTALLY. UL. DES. NO. U465, 1-HOUR RATED.

14 6" METAL STUDS (0.0179") AT 16" O.C. & 4" SOUND ATTENUATION BLANKET W/ 5/8" GYPSUM BOARD BOTH SIDES TO 4" ABOVE FINISHED CEILING (APC). BRACE TOP OF STUD TO ADJACENT WALL OR STRUCTURE.

15 3-5/8" METAL STUDS (0.0179") AT 16" O.C. & 3" SOUND ATTENUATION BLANKET W/ 5/8" GYPSUM BOARD BOTH SIDES TO 4" ABOVE FINISHED CEILING (APC). BRACE TOP OF STUD TO ADJACENT WALL OR STRUCTURE.

54 1-5/8" METAL STUDS (0.0179") AT 16" O.C. & 2" SOUND ATTENUATION BLANKET W/ 5/8" GYPSUM BOARD ONE SIDE TO 4" ABOVE FINISHED CEILING (APC). BRACE TOP OF STUD TO ADJACENT WALL OR STRUCTURE.

56 3-5/8" METAL STUDS (0.0179") AT 16" O.C. & 3" SOUND ATTENUATION BLANKET W/ 5/8" GYPSUM BOARD ONE SIDE TO 4" ABOVE FINISHED CEILING (APC). BRACE TOP OF STUD TO ADJACENT WALL OR STRUCTURE.

57 3-5/8" METAL STUD (0.0179") AT 16" O.C. AND 3" ATTENUATION BLANKET W/ 5/8" GYPSUM BOARD ONE SIDE TO STRUCTURAL DECK

59 6" METAL STUD (0.0179") AT 16" O.C. W/ 5/8" GYPSUM BOARD ONE SIDE TO STRUCTURAL DECK

PARTITION TYPES BY SYSTEM:

0-9	CMU
10-19	METAL STUD/ SINGLE LAYER GYPSUM
20-29	METAL STUD/ DOUBLE LAYER GYPSUM
30-39	METAL STUD/ TRIPLE LAYER GYPSUM
40-49	METAL STUD/ SHAFTWALL/ CHASE
50-59	METAL FURRED/ ONE-SIDED GYPSUM
60-69	WOOD STUD/ SINGLE LAYER GYPSUM

FIRE RATING: (TYPE AS INDICATED ON FLOOR PLANS)

S	SMOKE BARRIER
X	1-HOUR FIRE PARTITION OR FIRE BARRIER
Y	2-HOUR FIRE BARRIER
Z	3-HOUR FIRE BARRIER

PARTITION TYPES — G15 — 1" = 1'-0"

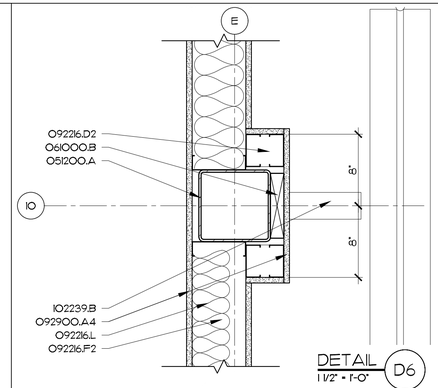

DETAIL — D6 — 1 1/2" = 1'-0"

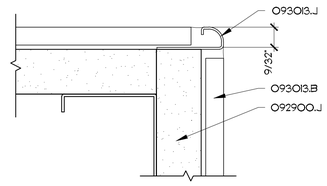

CERAMIC TILE OUTSIDE CORNER DETAIL — D9 — 1'-0" = 1'-0"

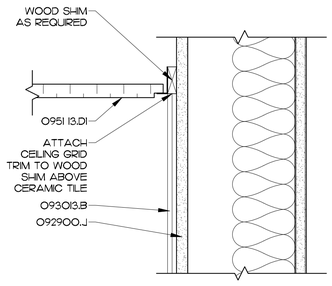

CERAMIC TILE-CEILING TRANSITION — D12 — 3" = 1'-0"

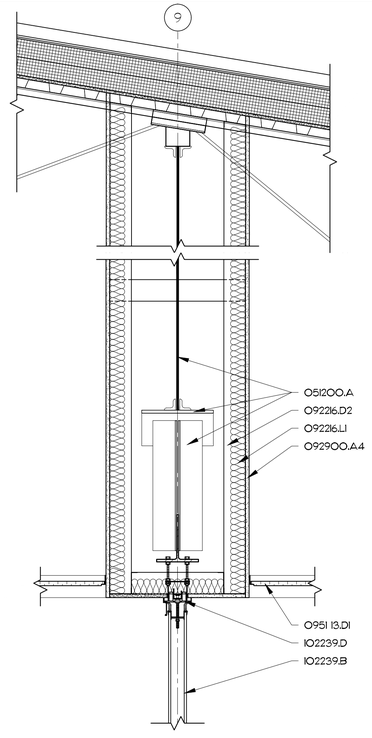

FOLDING PARTITION — A15 — 1" = 1'-0"

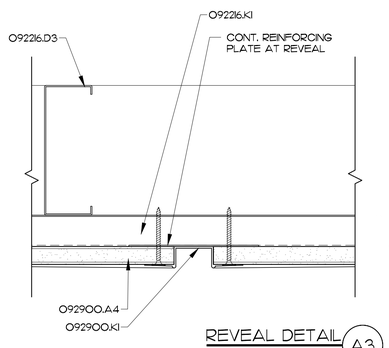

REVEAL DETAIL — A3 — 6" = 1'-0"

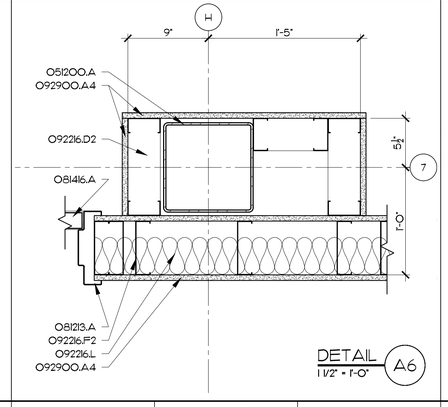

DETAIL — A6 — 1 1/2" = 1'-0"

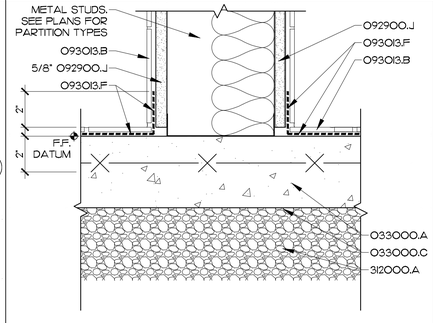

TYPICAL FLOOR-WALL WATER PROOFING DETAIL AT THINSET — A9 — 3" = 1'-0"

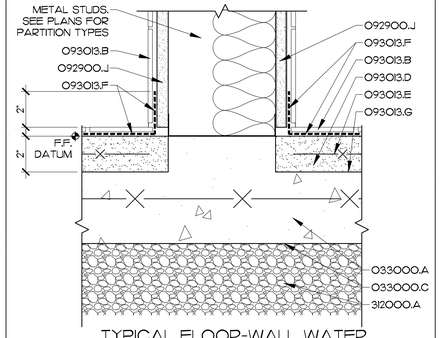

TYPICAL FLOOR-WALL WATER PROOFING DETAIL AT MUDBED — A12 — 3" = 1'-0"

MATERIALS KEYING LEGEND

033000.A	- CONCRETE SLAB ON GRADE, SEE STRUCTURAL
033000.C	- VAPOR BARRIER
051200.A	- STRUCTURAL STEEL, SEE STRUCTURAL DRAWINGS
061000.B	- WOOD FRAMING, 2X
081213.A	- HOLLOW METAL FRAME
081416.A	- SOLID CORE WOOD DOOR, FLUSH
092216.D2	- 3 5/8" METAL STUDS AT 16" O.C.
092216.D3	- 3 5/8" METAL STUDS AT 24" O.C.
092216.F2	- 6" METAL STUDS AT 16" O.C.
092216.KI	- 7/8" HAT CHANNEL AT 16" O.C.
092216.L	- ACOUSTICAL BLANKET, THICKNESS AS NOTED IN PARTITION TYPES
092216.LI	- ACOUSTICAL BLANKET, 3" THICK
092900.A4	- 5/8" GYPSUM WALLBOARD
092900.J	- CEMENTITIOUS BACKER UNIT
092900.KI	- TRIM, REVEAL
093013.B	- CERAMIC TILE
093013.D	- MORTAR BED
093013.E	- REINFORCING MESH
093013.F	- WATERPROOFING MEMBRANE
093013.G	- CLEAVAGE MEMBRANE
093013.J	- METAL TRIM
095113.DI	- ACOUSTICAL PANEL CEILING TILE, 2X2
102239.B	- OPERABLE PARTITION, ELECTRIC
102239.D	- OPERABLE PARTITION TRACK
312000.A	- POROUS FILL

GENERAL NOTES

1. SEE FIRE PROTECTION, PLUMBING, MECHANICAL, AND ELECTRICAL DRAWINGS FOR ALL PIPE, DUCT, ETC. THROUGH - PENETRATION FIRESTOP SYSTEMS. ALL PENETRATIONS SHALL BE SEALED IN ACCORDANCE WITH THOSE DETAILS.
2. PROVIDE CEMENTIOUS TILE BACKING PANEL IN LIEU OF GYPSUM BOARD WHERE CERAMIC WALL TILE IS SCHEDULED.
3. PROVIDE MOISTURE-RESISTANT GYPSUM BOARD IN ALL TOILET ROOMS, JANITORS CLOSETS, MECHANICAL ROOMS & WET AREAS IN LIEU OF GYPSUM BOARD INDICATED IN PARTITION TYPES.

KEY PLAN

SCO ID #23-26923-01A

NO	REVISION	DATE

SEAL: JOHN K. FARKAS, REGISTERED ARCHITECT, 5922, GREENVILLE, N. CAROLINA, 10/18/2024

JKF ARCHITECTURE
625 LYNNDALE CT., SUITE F, GREENVILLE, NC 27858 252-355-1068

CRAVEN COMMUNITY COLLEGE
CORPORATE TRAINING CENTER
NEW BERN, NC

DRAWING TITLE: PARTITION TYPES

SCALE	AS NOTED
DRAWN	MBD
CHECKED	JKF
DATE	9-1-2024
PROJECT NO.	2023-09
DRAWING NO	A7.1

© COPYRIGHT, JKF ARCHITECTURE PC, JOHN K. FARKAS, AIA

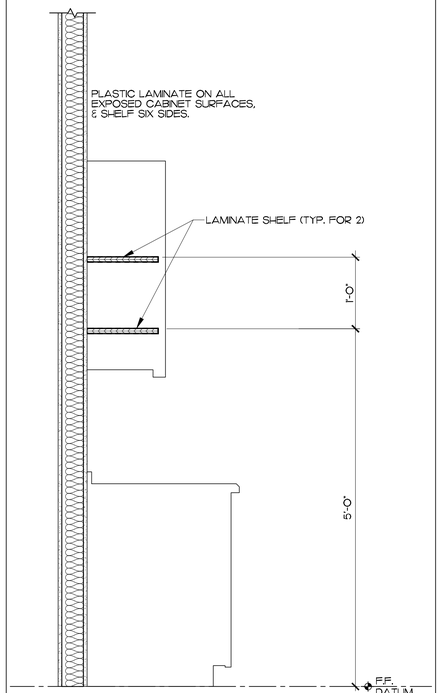

CASEWORK SECTION G6
1" = 1'-0"

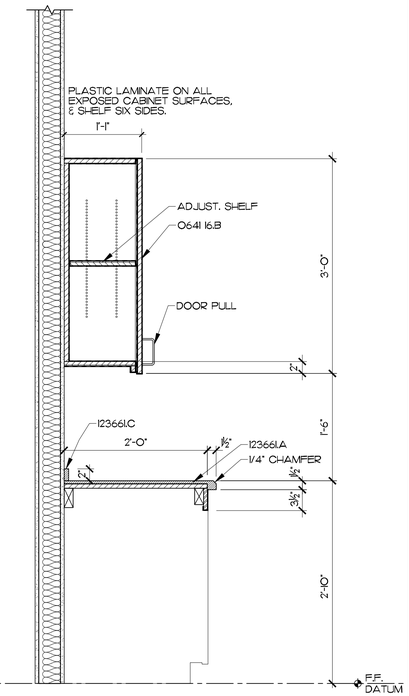

CASEWORK SECTION G9
1" = 1'-0"

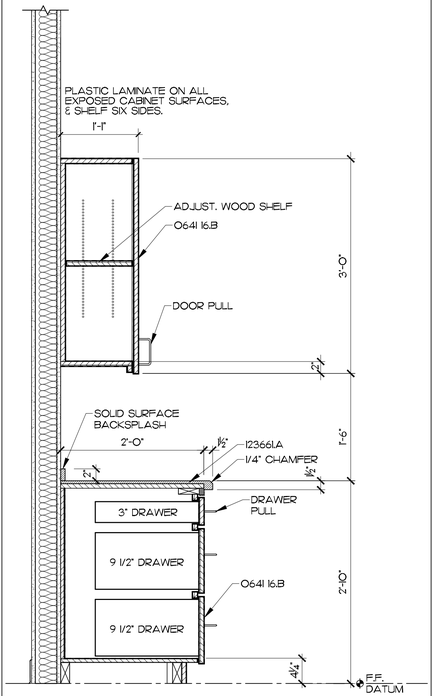

CASEWORK SECTION G12
1" = 1'-0"

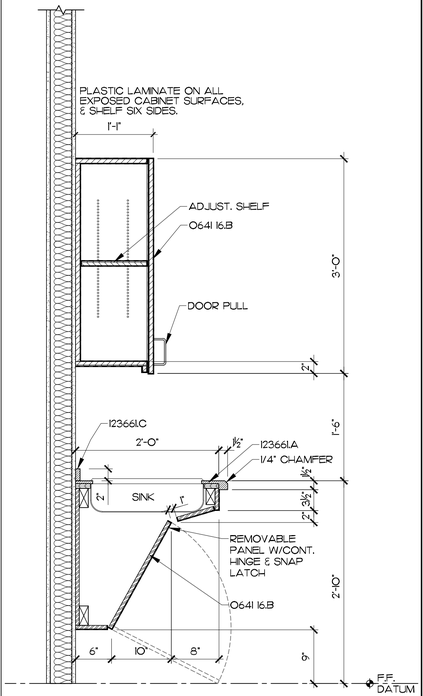

CASEWORK SECTION G15
1" = 1'-0"

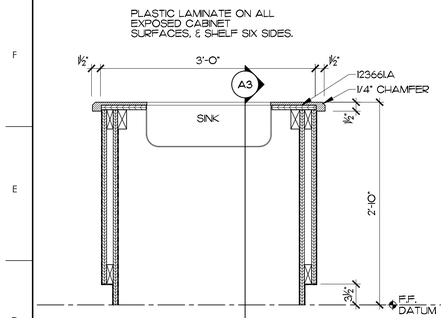

CASEWORK SECTION D3
1" = 1'-0"

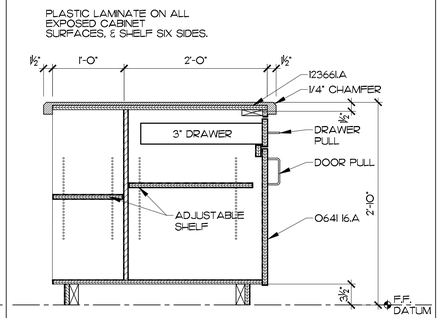

CASEWORK SECTION D6
1" = 1'-0"

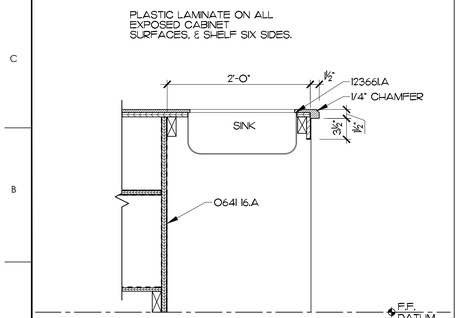

CASEWORK SECTION A3
1" = 1'-0"

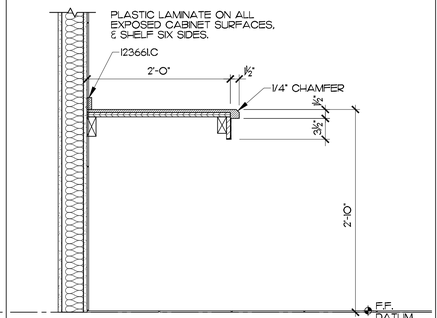

CASEWORK SECTION A6
1" = 1'-0"

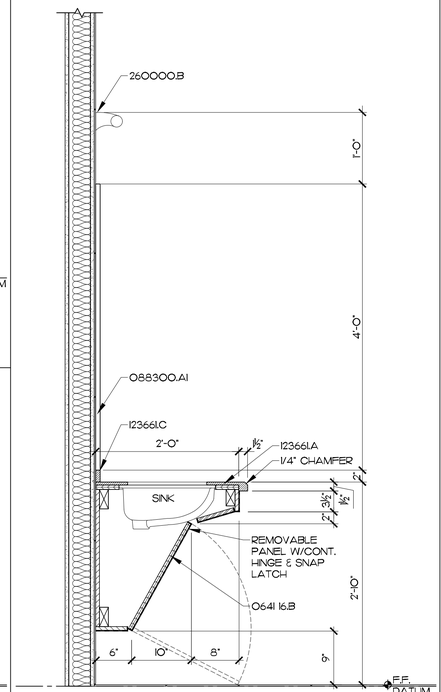

CASEWORK SECTION A9
1" = 1'-0"

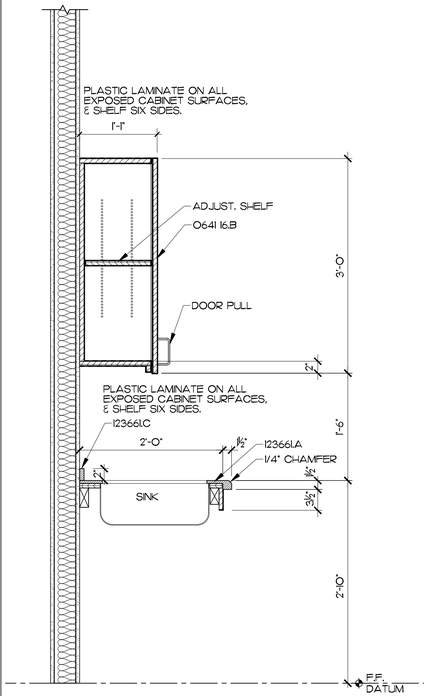

CASEWORK SECTION A12
1" = 1'-0"

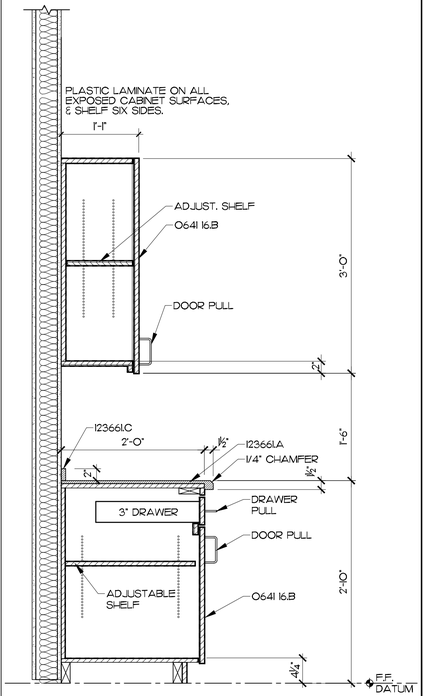

CASEWORK SECTION A15
1" = 1'-0"

MATERIALS KEYING LEGEND

0641 16.A	-PLASTIC LAMINATE CABINETS
0641 16.B	-PLASTIC LAMINATE, 3/4" THICK
088300.A1	-1/4" GLASS MIRROR
12366I.A	-SIMULATED STONE COUNTERTOP
12366I.C	-SIMULATED STONE BACKSPLASH
260000.B	-INTERIOR LIGHT FIXTURE

GENERAL NOTES

KEY PLAN

SCO ID #23-26923-01A

NO	REVISION	DATE

SEAL

JOHN K. FARKAS REGISTERED ARCHITECT 5922 GREENVILLE, N.C. 10/18/2024

JKF ARCHITECTURE
625 LYNNDALE CT., SUITE F, GREENVILLE, NC 27858 252-355-1068

CRAVEN COMMUNITY COLLEGE
CORPORATE TRAINING CENTER
NEW BERN, NC

DRAWING TITLE
DETAILS

SCALE	AS SHOWN
DRAWN	MBD
CHECKED	JKF
DATE	9-1-2024
PROJECT NO.	2023-09
DRAWING NO	A7.2

© COPYRIGHT, JKF ARCHITECTURE PC, JOHN K. FARKAS, AIA

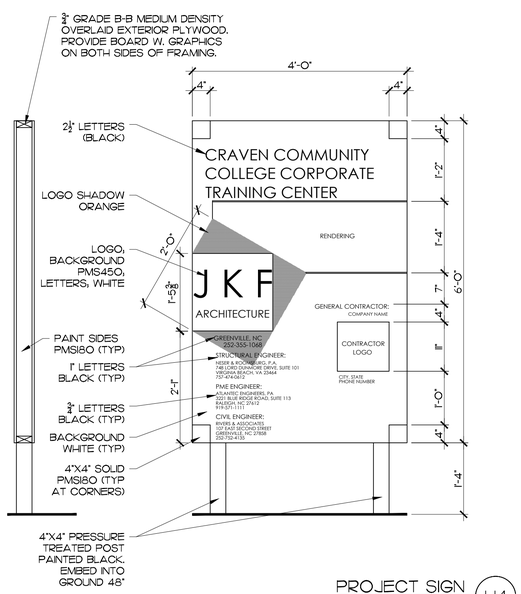

PROJECT SIGN H4
3/4" = 1'-0"

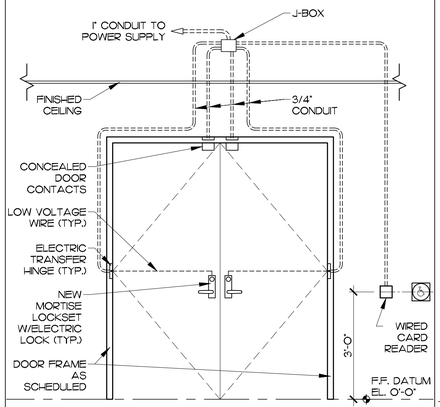

SECURITY DOOR DETAIL H7
1/2" = 1'-0"

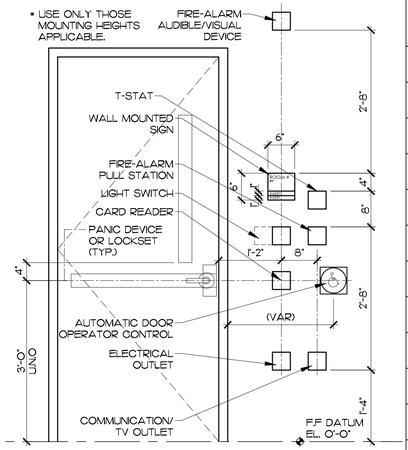

TYP. MOUNTING HEIGHT H10
3/4" = 1'-0"

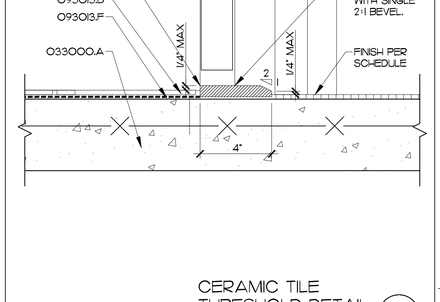

CERAMIC TILE THRESHOLD DETAIL D7
3" = 1'-0"

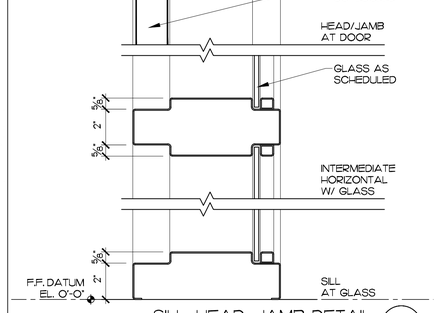

SILL, HEAD, JAMB DETAIL D10
3" = 1'-0"

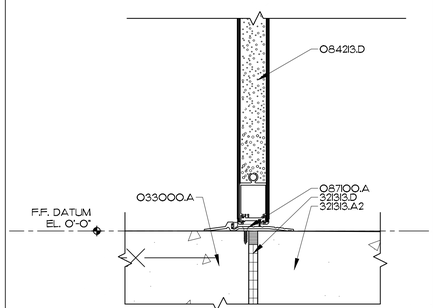

THRESHOLD DETAIL A7
3" = 1'-0"

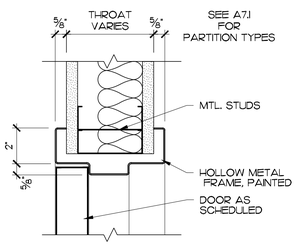

(TYP.) HEAD, JAMB DETAIL A10
3" = 1'-0"

DOOR SCHEDULE

DOOR GROUP NO.	DOOR OPENING SIZE (W X H)	DOOR TYPE	DOOR THICKNESS (1-3/4" U.N.O.)	DOOR MATERIAL	DOOR FINISH	FRAME ELEVATION	FRAME MATERIAL	FRAME FINISH	FRAME DETAILS J	FRAME DETAILS H	FRAME DETAILS S	GLASS	FIRE RATING (HRS)	REMARKS
1	2'(3'-0" X 7'-2")	AA	1.75"	AL	AN	CW1	AL	AN	D15/A6.1	G6/A6.2	A6/A6.2	1" LOW-E TEMP.	-	1" LOW-E TEMPERED GLASS IN DOOR.
2	2'(3'-0" X 7'-2")	AA	1.75"	AL	AN	CW4	AL	AN	H9/A6.1	GI2/A6.3	AI2/A3.3	1" LOW-E TEMP.	-	1" LOW-E TEMPERED GLASS IN DOOR. DOORS 100E & 100F, SEE SILL DETAIL A6/A6.2
3	2'(3'-0" X 7'-2")	AA	1.75"	AL	AN	CW5	AL	AN	D9/A6.1	GI5/A6.2	SIM. TO AI2/A3.3	1" LOW-E TEMP.	-	1" INSULATED SPANDREL GLASS AS NOTED. 1" LOW-E TEMPERED GLASS IN DOOR.
4	2'(3'-0" X 7'-2")	CC	1.75"	AL	FRP	F2	AL	AN	SIM. TO D6/A6.1	SIM. TO D12/A6.2	A7	-	-	
5	3'-8" X 7'-2"	B	1.75"	AL	FRP	F1	AL	AN	SIM. TO D6/A6.1	SIM. TO D12/A6.2	A7	1" LOW-E TEMP.	-	
6	3'-0 X 7'-2"	C	1.75"	AL	FRP	F1	AL	AN	D6/A6.1	D12/A6.2	A7	-	-	
7	2(3'-0" X 7'-2")	CC	1.75"	SWC	TF	F2	HM	P	AIO	AIO	-	-	-	
8	3'-0" X 7'-2"	A	1.75"	SWC	TF	F5	HM	P	DIO	DIO	DIO	1/4" TEMP.	-	
9	3'-0" X 7'-2"	A	1.75"	SWC	TF	F4	HM	P	DIO	DIO	DIO	1/4" TEMP.	-	
10	3'-0" X 7'-2"	A	1.75"	SWC	TF	F3	HM	P	DIO	DIO	DIO	1/4" TEMP.	-	
11	3'-8" X 7'-2"	B	1.75"	SWC	TF	F1	HM	P	AIO	AIO	-	1/4" TEMP.	-	
12	3'-0" X 7'-2"	C	1.75"	SWC	TF	F1	HM	P	AIO	AIO	D7	-	-	
13	3'-0" X 7'-2"	A	1.75"	SWC	TF	F1	HM	P	AIO	AIO	D7	1/4" TEMP. FROSTED	-	
14	3'-0" X 7'-2"	A	1.75"	SWC	TF	F1	HM	P	AIO	AIO	-	1/4" TEMP.	-	
15	3'-0" X 7'-2"	C	1.75"	HM	P	F1	HM	P	AIO	AIO	-	-	-	

DOOR TYPES

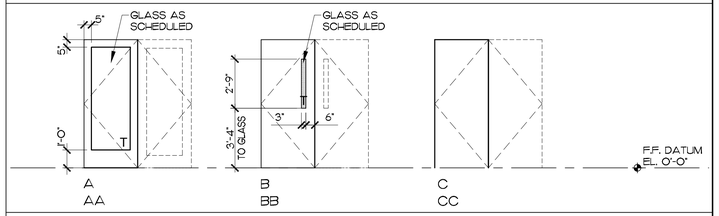

FRAME TYPES

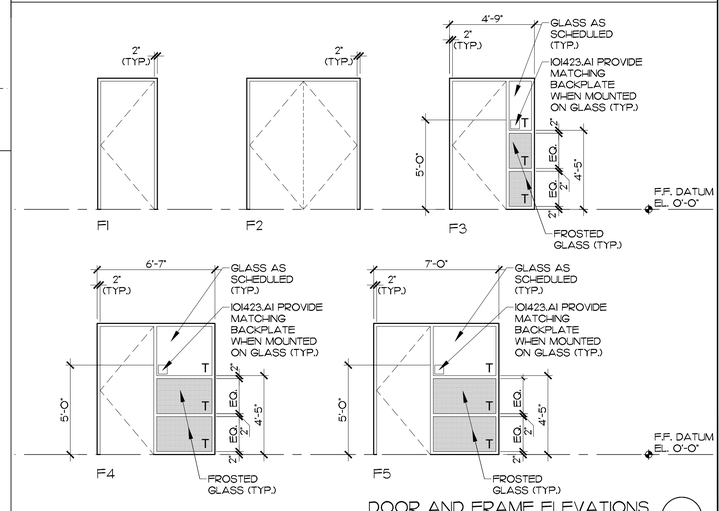

DOOR AND FRAME ELEVATIONS A15
1/4" = 1'-0"

MATERIALS KEYING LEGEND

033000.A	- CONCRETE SLAB ON GRADE, SEE STRUCTURAL
087100.A	- ALUMINUM FRP DOOR
084213.D	- THERMAL BREAK THRESHOLD, SET IN SEALANT
101423.A1	- PANEL SIGN, 6X6
321313.A2	- CONCRETE PAVING, SEE CIVIL DRAWINGS
321313.D	- COMPRESSIBLE FILL

GENERAL NOTES

KEY PLAN

SCO ID #23-26923-01A

NO	REVISION	DATE

SEAL: JOHN K. FARKAS, REGISTERED ARCHITECT, GREENVILLE, N.C., 10/18/2024, 5922

JKF ARCHITECTURE
625 LYNNDALE CT., SUITE F, GREENVILLE, NC 27858 252-355-1068

CRAVEN COMMUNITY COLLEGE CORPORATE TRAINING CENTER
NEW BERN, NC

DRAWING TITLE: DOOR SCHEDULE AND DETAILS

SCALE	AS NOTED
DRAWN	MBD
CHECKED	JKF
DATE	9-1-2024
PROJECT NO.	2023-09
DRAWING NO	A8.1

© COPYRIGHT, JKF ARCHITECTURE PC, JOHN K. FARKAS, AIA

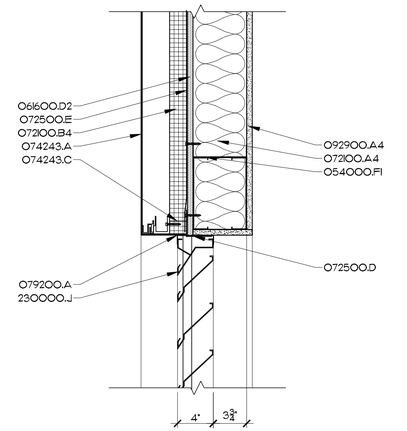

HEAD DETAIL J4
H1/2" = 1'-0"

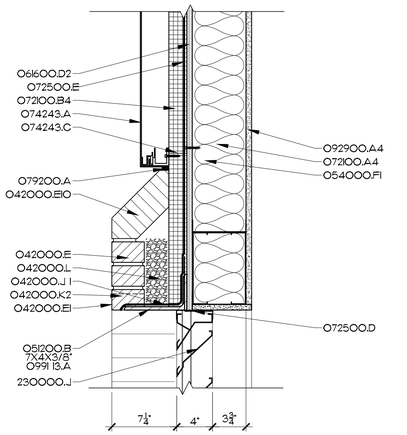

HEAD DETAIL J7
H1/2" = 1'-0"

WINDOW AND LOUVER TYPES

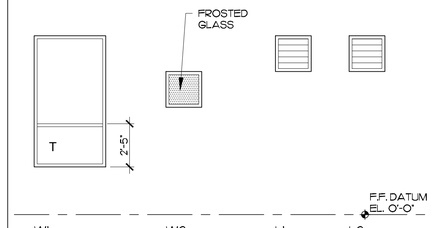

WINDOW AND LOUVER SCHEDULE

WINDOW GROUP NO.	WINDOW UNIT SIZE (W X H)	WINDOW TYPE	MATERIAL	FINISH	FRAME ELEVATION	UNIT THICKNESS	DETAILS J	DETAILS H	DETAILS S	GLASS	FIRE RATING (HRS)	REMARKS
W1	4'-0" X 7'-4"	FIXED	AL	AN	W1	3 1/4"	A12 / A6.1	A15 / A6.3	A15 / A6.3	1" LOW-E	-	(T) TEMP INSULATED GLASS WHERE INDICATED.
W2	2'-0" X 2'-0"	FIXED	AL	AN	W2	3 1/4"	A12 / A6.1	A15 / A6.3	A15 / A6.3	1" LOW-E		1" INSULATED FROSTED GLASS
CW2	18'- 0 3/4" X 10'-0"	CURTAIN WALL	AL	AN	CW2	7"	D12 / A6.1	A6 / A3.3	A6 / A3.3	1" LOW-E		(T) TEMP INSULATED GLASS WHERE INDICATED.
CW3	27'-4" X 14'-0"	CURTAIN WALL	AL	AN	CW3	7"	K6 / A6.1	A3 / A6.2	A15 / A3.2	1" LOW-E		(T) TEMP INSULATED GLASS WHERE INDICATED.
CW6	4'-0" X 13'-4"	CURTAIN WALL	AL	AN	CW6	7"	H9 / A6.1	G15 / A6.2	D15 / A6.2	1" LOW-E		(T) TEMP INSULATED GLASS WHERE INDICATED.
CW7	4'-0" X 13'-4"	CURTAIN WALL	AL	AN	CW7	7"	H9 / A6.1	G15 / A6.2	D15 / A6.2	1" LOW-E		1" INSULATED SPANDREL GLASS AS NOTED (T) TEMP INSULATED GLASS WHERE INDICATED.
L1	2'-0" X 2'-0"	FIXED LOUVER	AL	AN	L1	4"	E4	J7	E7	-	-	
L2	2'-0" X 2'-0"	FIXED LOUVER	AL	AN	L1	4"	A3	J4	SM TO E7	-	-	

CURTAIN WALL TYPES

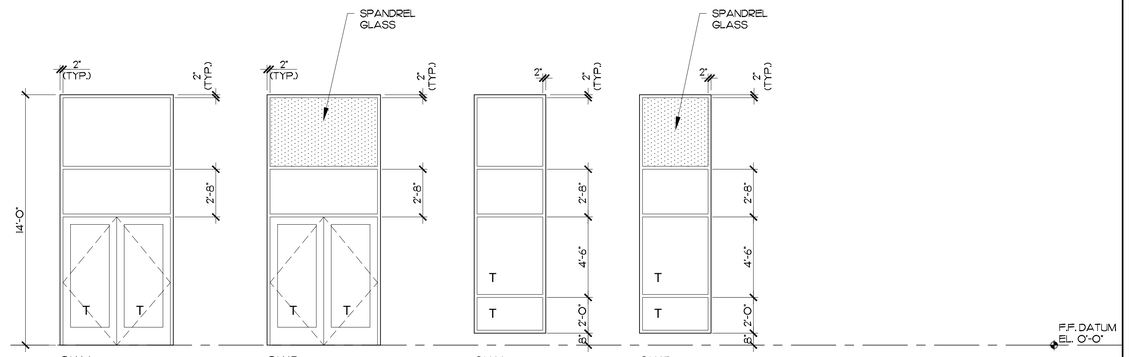

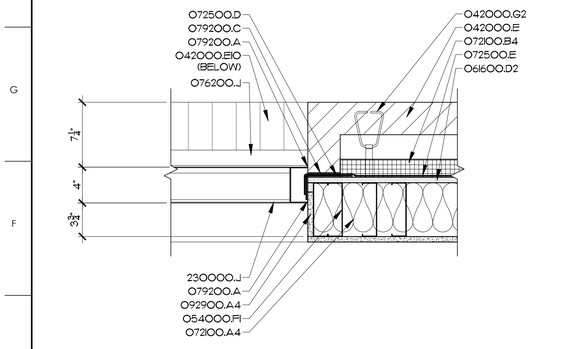

JAMB DETAIL E4
H1/2" = 1'-0"

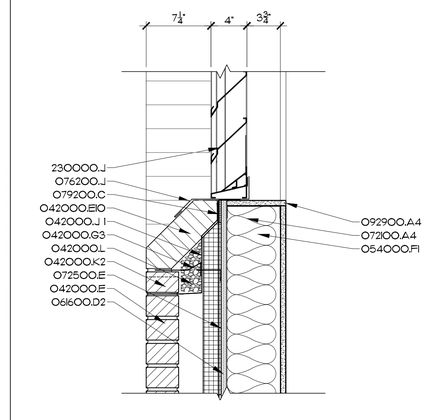

SILL DETAIL E7
H1/2" = 1'-0"

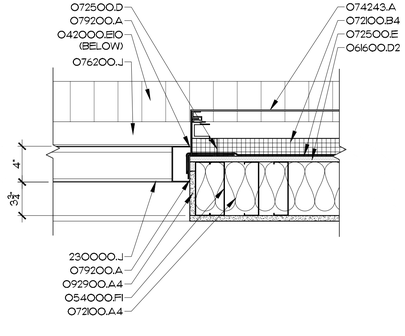

JAMB DETAIL A3
H1/2" = 1'-0"

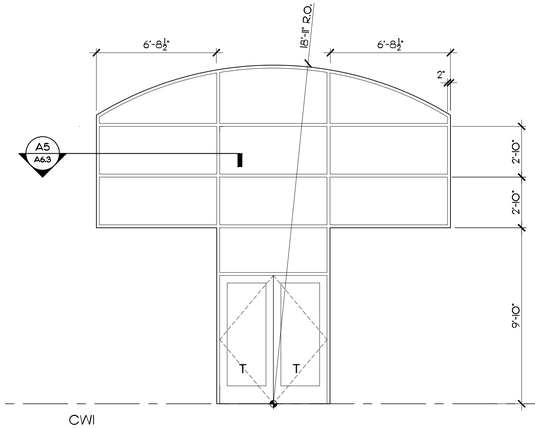

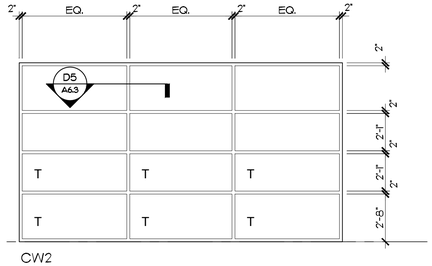

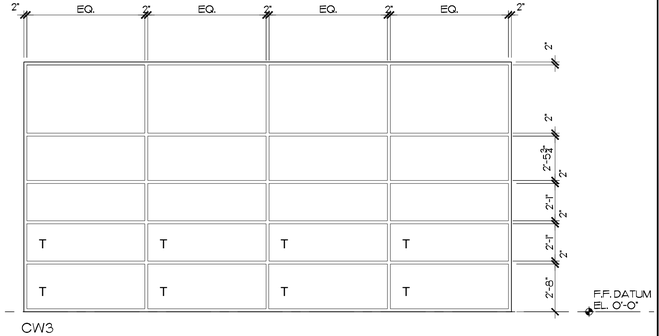

MATERIALS KEYING LEGEND

042000.E	-	FACE BRICK
042000.EI	-	FACE BRICK, SHELF BRICK
042000.EIO	-	FACE BRICK, SOLDIER COURSE SILL, SPECIAL SHAPE
042000.E6	-	FACE BRICK, SHELF BRICK, SOLDIER COURSE
042000.G2	-	ADJ. BRICK TIES AT 16" OC VERT., 24" O.C. HORIZ.
042000.J1	-	THRU-WALL FABRIC FLASHING
042000.K2	-	WEEP SLOTS AT 16" O.C.
042000.L	-	CAVITY DRAINAGE MATERIAL
051200.B	-	STEEL ANGLE, SIZE AS INDICATED
054000.FI	-	COLD FORMED METAL FRAMING, 6" STUD AT 16" O.C.
061600.D2	-	GLASS-MAT GYPSUM SHEATHING, 5/8" THICK
072100.A4	-	R-19 BATT INSULATION
072100.B4	-	2" RIGID INSULATION
072500.D	-	SELF-ADHERING SHEET
072500.E	-	BUILDING WRAP
074243.A	-	COMPOSITE WALL PANEL, FLUSH PANEL W/REVEAL
074243.C	-	2" METAL Z-FURRING CHANNEL, 16" O.C.
076200.J	-	METAL SILL PAN
079200.A	-	SEALANT
079200.C	-	COMPRESSBLE SEALER W/ADHESIVE
092900.A4	-	5/8" GYPSUM WALLBOARD
099113.A	-	PAINT FINISH, EXTERIOR SYSTEM
230000.J	-	MECH. LOUVER-SEE HVAC DRAWINGS

GENERAL NOTES

KEY PLAN

SCO ID #23-26923-01A

NO	REVISION	DATE

SEAL: JOHN K. FARKAS, REGISTERED ARCHITECT, 5922, GREENVILLE, N. CAROLINA, 10/18/2024

JKF ARCHITECTURE
625 LYNNDALE CT., SUITE F, GREENVILLE, NC 27858 252-355-1068

CRAVEN COMMUNITY COLLEGE
CORPORATE TRAINING CENTER
NEW BERN, NC

DRAWING TITLE: WINDOW SCHEDULE AND DETAILS

SCALE	AS NOTED
DRAWN	MBD
CHECKED	JKF
DATE	9-1-2024
PROJECT NO.	2023-09
DRAWING NO	A8.2

© COPYRIGHT, JKF ARCHITECTURE PC, JOHN K. FARKAS, AIA

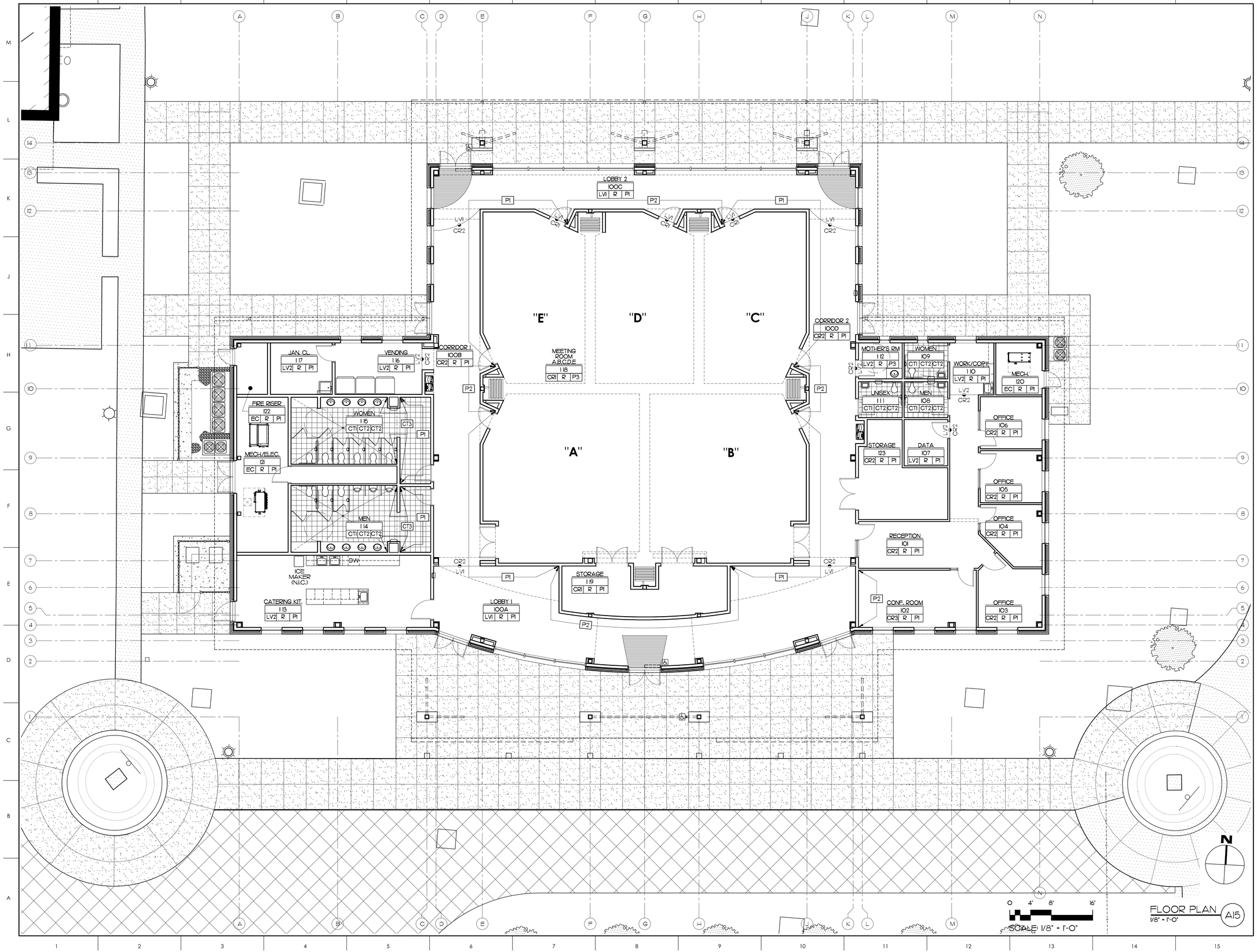

FLOOR PLAN A15
1/8" = 1'-0"

MATERIALS KEYING LEGEND

GENERAL NOTES

KEY PLAN

SCO ID #23-26923-01A

NO	REVISION	DATE

SEAL
JOHN K. FARKAS REGISTERED ARCHITECT 5922 GREENVILLE, N.C. 10/18/2024

JKF ARCHITECTURE
625 LYNNDALE CT., SUITE F, GREENVILLE, NC 27858 252-355-1068

CRAVEN COMMUNITY COLLEGE
CORPORATE TRAINING CENTER
NEW BERN, NC

DRAWING TITLE
ROOM FINISH PLAN

SCALE: 1/8" = 1'-0"	DRAWING NO: A9.1
DRAWN: MBD	
CHECKED: JKF	
DATE: 9-1-2024	
PROJECT NO.: 2023-09	

COPYRIGHT, JKF ARCHITECTURE PC, JOHN K. FARKAS, AIA

GENERAL NOTES:

GENERAL NOTES:

1. THIS STRUCTURE HAS BEEN DESIGNED IN ACCORDANCE WITH THE PROVISIONS OF THE INTERNATIONAL BUILDING CODE, 2015 EDITION, AS ADOPTED BY THE 2018 NORTH CAROLINA STATE BUILDING CODE, EFFECTIVE JANUARY 01, 2019.
2. ALL WORK SHALL COMPLY WITH THE CODES LISTED BELOW AND IN THE SPECIFICATIONS.
3. VERIFY ALL DRAWINGS FOR COORDINATION BETWEEN TRADES, LOCATE SLOTS, SLEEVES AND TRENCHES AS REQUIRED FOR MECHANICAL TRADES. PROVIDE AND INSTALL ANCHORS, INSERTS, HANGERS, ETC. AS REQUIRED FOR VARIOUS TRADES.
4. SUBMIT SHOP DRAWINGS OF REINFORCEMENT DETAILS, STRUCTURAL STEEL, ETC. FOR APPROVAL BEFORE PROCEEDING WITH THE WORK. THE CONTRACTOR SHALL CHECK ALL DIMENSIONS AND ACCEPT FULL RESPONSIBILITY FOR DIMENSIONAL CORRECTNESS.
5. UNDER NO CIRCUMSTANCES SHALL REPRODUCTION OF CONTRACT DRAWINGS BE USED AS SHOP DRAWINGS.
6. PROVIDE ALL TEMPORARY GUYING AND BRACING REQUIRED TO ERECT AND HOLD THE STRUCTURE IN PROPER ALIGNMENT UNTIL ALL STRUCTURAL WORK AND CONNECTIONS HAVE BEEN COMPLETED.
7. LOADING APPLIED TO THE STRUCTURE DURING THE PROCESS OF CONSTRUCTION SHALL NOT EXCEED THE SAFE LOAD-CARRYING CAPACITY OF THE STRUCTURAL MEMBERS. THE LIVE LOADINGS USED IN THE DESIGN OF THIS STRUCTURE ARE INDICATED IN THE "DESIGN CRITERIA NOTES". DO NOT APPLY ANY CONSTRUCTION LOADS UNTIL ALL STRUCTURAL FRAMING IS PROPERLY CONNECTED TOGETHER AND UNTIL ALL TEMPORARY BRACING IS IN PLACE.
8. IN ACCORDANCE WITH GENERALLY ACCEPTED CONSTRUCTION PRACTICES, CONTRACTOR WILL BE SOLELY AND COMPLETELY RESPONSIBLE FOR CONDITION OF JOB SITE INCLUDING SAFETY OF ALL PERSONS AND PROPERTY DURING PERFORMANCE OF THE WORK.
9. THE DUTY OF THE ARCHITECT IN CONDUCTING CONSTRUCTION REVIEW OF CONTRACTOR'S PERFORMANCE IS NOT INTENDED TO INCLUDE REVIEW OF ADEQUACY OF CONTRACTOR'S SAFETY MEASURES IN, ON, OR NEAR THE CONSTRUCTION SITE.
10. TYPICAL DETAILS AND GENERAL NOTES APPLY TO ALL PARTS OF THE JOB EXCEPT WHERE SPECIFICALLY DETAILED OR NOTED OTHERWISE.
11. STRUCTURAL DRAWINGS SHOW ONLY THE BASIC STRUCTURAL FRAMING. REFER TO ARCHITECTURAL, MECHANICAL AND ELECTRICAL DRAWINGS FOR NON-STRUCTURAL ITEMS WHICH REQUIRE SPECIAL PROVISIONS DURING THE CONSTRUCTION OF THE STRUCTURAL FRAME.
12. INFORM THE PROFESSIONAL OF RECORD IN WRITING OF ANY DEVIATION FROM THE CONTRACT DOCUMENTS. THE CONTRACTOR IS NOT RELIEVED OF THE RESPONSIBILITY OF SUCH DEVIATION BY THE PROFESSIONAL OF RECORD REVIEW OF SHOP DRAWINGS, PRODUCT DATA, ETC. UNLESS THE CONTRACTOR HAS SPECIFICALLY INFORMED THE PROFESSIONAL OF RECORD OF SUCH DEVIATION AT THE TIME OF SUBMISSION, AND THE PROFESSIONAL OF RECORD HAS GIVEN WRITTEN APPROVAL TO THE SPECIFIC DEVIATION.

FOUNDATION NOTES:

1. FOUNDATIONS FOR THIS STRUCTURE HAVE BEEN DESIGNED IN ACCORDANCE WITH THE RECOMMENDATIONS IN THE GEOTECHNICAL EXPLORATION REPORT, PREPARED BY TERRACON CONSULTANTS, INC DATED MARCH 11, 2024.
2. PERFORM ALL EARTHWORK IN ACCORDANCE WITH THE SPECIFICATIONS.
3. THE ENTIRE STRUCTURE SHALL BE FOUNDED ON VERY WELL COMPACTED STRUCTURAL FILL OR UNDISTURBED SOIL WITH A DESIGN BEARING PRESSURE OF 2000 P.S.F.
4. PRIOR TO PLACING FOUNDATION CONCRETE, ALL FOUNDATION EXCAVATIONS SHALL BE INSPECTED BY THE GEOTECHNICAL ENGINEER TO VERIFY THE EXTENT OF ANY LOOSE, SOFT, OR UNSATISFACTORY SOIL AND TO VERIFY THE DESIGN BEARING PRESSURE. THE GEOTECHNICAL ENGINEER WILL PROVIDE DIRECTION FOR CORRECTIVE ACTION WHERE REQUIRED.
5. DO NOT INSTALL FOUNDATION WORK UNTIL IT HAS BEEN COORDINATED WITH ADJACENT UNDERGROUND UTILITIES. FOOTINGS SHALL BE SLEEVED OR LOWERED WHERE REQUIRED. DO NOT INSTALL UTILITIES UNDER ISOLATED COLUMN FOOTINGS. INSTALL UTILITIES PERPENDICULAR TO WALL FOOTINGS. INSTALL SLEEVES TO ACCOMMODATE PLUMBING OR UTILITY LINES PRIOR TO POURING FOOTING CONCRETE OR LOWER FOOTINGS SO PLUMBING OR UTILITY LINES OCCUR OVER THE TOP OF THE FOOTINGS. REFER TO TYPICAL DETAILS.
6. DO NOT PUT IN UNBALANCED BACKFILL AGAINST FOUNDATION WALLS UNLESS WALLS ARE SECURELY BRACED AGAINST OVERTURNING.
7. FROST LINE DEPTH IS 12" BELOW GRADE. BOTTOM OF EXTERIOR FOUNDATIONS SHALL BEAR A MINIMUM OF 12" BELOW FINAL GRADE. LOWER FOOTINGS AS REQUIRED TO MAINTAIN COVERAGE.

CAST IN PLACE CONCRETE NOTES:

1. CAST IN PLACE CONCRETE SHALL COMPLY WITH THE AMERICAN CONCRETE INSTITUTE (ACI- 318-14), COMMENTARY, (ACI-318R-14), AND THE SPECIFICATIONS FOR STRUCTURAL CONCRETE (ACI 301).
2. DETAILING OF ALL CONCRETE STEEL REINFORCEMENT SHALL BE IN ACCORDANCE WITH THE MANUAL OF STANDARD PRACTICE FOR DETAILING REINFORCED CONCRETE STRUCTURES (ACI-315).
3. ALL CONCRETE SHALL BE NORMAL WEIGHT, UNLESS OTHERWISE NOTED, CONCRETE HAVING A MINIMUM COMPRESSIVE STRENGTH AT 28 DAYS AS FOLLOWS:
   A) SLAB ON GRADE 4,000 PSI
   B) FOUNDATIONS 3,000 PSI
   C) CONCRETE NOT OTHERWISE NOTED 4,000 PSI
   D) CONCRETE EXPOSED TO WEATHER SHALL BE AIR ENTRAINED.
4. ALL REINFORCING SHALL BE AS FOLLOWS:
   F) REINFORCING BARS - ASTM A-615, GRADE 60
   G) WELDED REINFORCING BARS - ASTM A706, GRADE 60
   H) WELDED WIRE FABRIC - ASTM A-1064 FLAT SHEET TYPE, ROLL TYPE NOT ACCEPTABLE.
5. WELDED WIRE FABRIC SHALL BE PROPERLY SUPPORTED PRIOR TO PLACING CONCRETE. HOOKING OF FABRIC IS NOT PERMITTED.
6. UNLESS OTHERWISE NOTED, REINFORCING STEEL MARKED CONTINUOUS (CONT.) SHALL BE LAPPED PER THE REINFORCING LAP SCHEDULE.
7. HOLD ALL REINFORCING STEEL SECURELY IN PLACE TO PREVENT DISLOCATION DURING THE POURING OPERATION. SUPPORT SLAB REINFORCING BARS ON HIGH CHAIRS AND BAR SPACERS OF SUITABLE DESIGN, OR CONCRETE BLOCKS HAVING THE SAME MINIMUM COMPRESSIVE STRENGTH OF THE CONCRETE SLAB.
8. DO NOT PLACE CONCRETE UNTIL ALL EMBEDDED WORK HAS BEEN INSTALLED, TESTED AND INSPECTED.
9. EXCEPT AS OTHERWISE SHOWN MINIMUM PROTECTION (CONCRETE COVER) FOR REINFORCING STEEL SHALL BE AS FOLLOWS:

   CONCRETE SURFACES CAST AGAINST SOIL: 3"
   CONCRETE SURFACES EXPOSED TO EARTH OR WEATHER: 2"
   INTERIOR CONCRETE SURFACES: 3/4" FOR SLABS

OPEN WEB STEEL JOIST NOTES:

1. OPEN-WEB STEEL JOIST SHALL COMPLY WITH THE STANDARD SPECIFICATION FOR OPEN WEB JOISTS OF THE STEEL JOIST INSTITUTE (SJI), LATEST EDITION.
2. OPEN-WEB STEEL JOIST SHALL HAVE A MINIMUM BEARING LENGTH AS FOLLOWS:
   ON STEEL - 'K' SERIES = 5½"
3. WELD ALL STEEL JOISTS WHEREVER THEY BEAR ON STRUCTURAL STEEL MEMBERS, IN ACCORDANCE WITH THE S.J.I AND THE A.I.S.C SPECIFICATIONS
4. PREPARE AND SUBMIT SHOP DRAWINGS INDICATING THE JOIST LAYOUT, SPECIAL CONNECTIONS, AND ACCESSORIES. INCLUDE MARK, NUMBER, TYPE, LOCATION, AND SPACING OF JOISTS AND BRIDGING.
5. THE JOIST MANUFACTURER IS RESPONSIBLE FOR CONTINUOUS JOIST BRIDGING LINES SATISFYING THE REQUIREMENTS OF THE SJI SPECIFICATION FOR THE TOP AND BOTTOM CHORDS OF ALL STEEL JOISTS, AS WELL AS ANY ADDITIONAL BRIDGING / BRACING SHOWN ON THE DRAWINGS OR REQUIRED FOR JOISTS SUBJECTED TO NET UPLIFT OF OTHER SPECIAL LOADS. PROVIDE JOIST BRIDGING REQUIRED AT CHANGES OF JOIST DEPTHS AND AT ENDS OF ALL BRIDGING LINES UNLESS SUCH ENDS ARE PROPERLY ANCHORED INTO THE INTERSECTING INTERIOR OR END WALLS.
6. INSTALL JOIST BRIDGING AND CONNECTIONS COMPLETELY PRIOR TO PLACING ANY CONSTRUCTION LOADS ON THE JOISTS. CONSTRUCTION LOADING SHALL NOT EXCEED THE JOIST DESIGN LOAD.
7. REINFORCE CONCENTRATED LOADS EXCEEDING 100 POUNDS AND NOT LOCATED AT JOIST PANEL POINTS PER THE TYPICAL DETAIL.
8. DO NOT APPLY PAINT OR PRIMER ON STEEL JOISTS OR ACCESSORIES RECEIVING SPRAYED FIRE-RECEIVING MATERIALS. SEE THE ARCHITECTURAL DRAWINGS FOR EXTENTS OF SPRAYED FIRE RESISTIVE MATERIALS.

POST-INSTALLED ANCHOR NOTES:

1. POST-INSTALLED ANCHORS MUST COMPLY WITH THE AMERICAN CONCRETE INSTITUTE (ACI- 318-14). SUBMIT CALCULATIONS DEMONSTRATING THAT THE PRODUCT IS CAPABLE OF ACHIEVING THE PERFORMANCE VALUES INDICATED IN THE DRAWINGS. PRODUCT MUST HAVE AN ICC ESR SHOWING COMPLIANCE WITH THE RELEVANT BUILDING CODE.
2. PROVIDE ANCHORS WITH A MINIMUM ALLOWABLE CAPACITY AS LISTED BELOW. THE CAPACITIES ARE BASED ON COMBINED SHEAR AND TENSION LOADING:

   MASONRY:
   ¾" ANCHOR: SHEAR = 1600 LB, TENSION = 1850 LB
3. ANCHOR CAPACITY IS DEPENDENT ON SPACING BETWEEN ADJACENT ANCHORS AND EDGE DISTANCE. INSTALL ANCHORS IN ACCORDANCE WITH SPACING AND EDGE DISTANCES INDICATED IN THE DRAWINGS.
4. INSTALL ANCHORS PER THE MANUFACTURER INSTRUCTIONS, AS INCLUDED IN THE ANCHOR PACKAGING.
5. DRILL CORRECT HOLE SIZES FOR MECHANICAL ANCHORS WITH CARBIDE-TIPPED DRILL BITS MEETING THE DIAMETER REQUIREMENTS OF ANSI B212.15.
6. DRILL HOLES WITH A HAMMER DRILL UNLESS OTHERWISE NOTED.
7. DO NOT DISTURB OR APPLY LOAD TO ADHESIVE ANCHORS PRIOR TO FULL CURE OF THE ADHESIVE.

STRUCTURAL STEEL NOTES:

1. STRUCTURAL STEEL SHALL COMPLY WITH THE FOURTEENTH EDITION OF THE AMERICAN INSTITUTE OF STEEL CONSTRUCTION (AISC 360-10) "STEEL CONSTRUCTION MANUAL" - ALLOWABLE STRESS DESIGN.
2. STRUCTURAL STEEL SHALL BE NEW, CLEAN, AND STRAIGHT, AND CONFORM TO THE FOLLOWING:
   A) STEEL W- AND WT SHAPES - ASTM A992, GRADE 50
   B) RECTANGULAR AND SQUARE HSS SHAPES - ASTM A500, GRADE C
   C) ANCHOR RODS - ASTM F1554, GRADE 55
   D) HIGH STRENGTH BOLTS - ASTM F3125, GRADE A325
   E) ALL OTHER STEEL SHAPES - ASTM A36, UNLESS OTHERWISE NOTED
3. UNLESS OTHERWISE NOTED, ALL CONNECTIONS SHALL BE AISC SIMPLE SHEAR CONNECTIONS AT STANDARD FRAMED BEAM CONNECTIONS. THE FABRICATOR IS RESPONSIBLE FOR DESIGNING ALL CONNECTIONS. WHERE REACTIONS ARE NOT INDICATED ON PLAN, CONNECTIONS SHALL BE DESIGNED FOR ½ OF THE TOTAL ALLOWABLE UNIFORM LOAD FOR LATERALLY SUPPORTED BEAMS GIVEN IN PART 3 OF THE "STEEL CONSTRUCTION MANUAL"14TH EDITION. CONNECTION DETAILS SHALL BE IN ACCORDANCE WITH AISC STANDARDS.
4. UNLESS OTHERWISE NOTED WELD ALL SHOP CONNECTIONS AND BOLT ALL FIELD CONNECTIONS. THE FABRICATOR IS RESPONSIBLE FOR THE DESIGN OF ALL CONNECTIONS. REFER TO SPECIFICATIONS.
5. SHOW ALL HOLES REQUIRED IN STRUCTURAL STEEL MEMBERS FOR PIPING ON THE SHOP DRAWINGS AND MAKE THEM IN THE SHOP. DO NOT CUT HOLES IN THE FIELD WITHOUT THE APPROVAL OF THE REGISTERED DESIGN PROFESSIONAL OF RECORD.
6. WELDING SHALL COMPLY WITH THE "STRUCTURAL WELDING CODE - STEEL" (AWS D1.1). WELD ELECTRODES SHALL BE E70XX.UNLESS OTHERWISE NOTED, MINIMUM WELD SIZE SHALL BE 3/16" CONTINUOUS FILLET WELDS
7. REFER TO THE ARCHITECTURAL, CIVIL, MECHANICAL, PLUMBING, AND ELECTRICAL DRAWINGS FOR ADDITIONAL STEEL (IF ANY) NOT SHOWN ON THE STRUCTURAL DRAWINGS.
8. UNLESS OTHERWISE NOTED, THE TOP OF ALL STEEL COLUMNS SHALL HAVE A STEEL CAP PLATE. UNLESS OTHERWISE NOTED, MINIMUM CAP PLATE DIMENSIONS SHALL MATCH COLUMN WIDTH AND DEPTH, AND MINIMUM THICKNESS SHALL EQUAL COLUMN WEB THICKNESS, OR ½" MINIMUM.
9. ALL EXTERIOR STEEL, SHELF ANGLES, LINTEL ANGLES, AND OTHER ITEMS MARKED "GALVANIZED" MUST BE GALVANIZED IN ACCORDANCE TO ASTM A123 OR ASTM A153. GALVANIZE AFTER FABRICATION WHERE PRACTICAL. REPAIR DAMAGED GALVANIZED COATING USING ASTM A780 ZINC-RICH PAINT.
10. DO NOT APPLY PAINT OR PRIMER ON STRUCTURAL STEEL SURFACES RECEIVING SPRAYED FIRE-RESISTIVE MATERIALS. SEE THE ARCHITECTURAL DRAWINGS FOR EXTENTS OF SPRAYED FIRE RESISTIVE MATERIALS.

STRUCTURAL DELEGATED DESIGNS AND DEFERRED SUBMITTALS NOTES:

STRUCTURAL DELEGATED DESIGNS AND SUBSEQUENT DEFERRED SUBMITTALS ARE FOR ELEMENTS, PARTS, OR PORTIONS OF THE OVERALL STRUCTURAL SYSTEM THAT ARE INDICATED OR REFERRED TO ON THESE DRAWINGS AND THAT ARE CRITICAL TO THE PERFORMANCE OF THE OVERALL STRUCTURAL SYSTEMS. DESIGN CRITERIA HAS BEEN PROVIDED FOR THESES ITEMS IN THE STRUCTURAL NOTES, PLANS, AND DETAILS.

STRUCTURAL DEFERRED SUBMITTALS ARE COMPLETE PACKAGES MUST BE SUBMITTED FOR REVIEW THAT INCLUDE DRAWINGS AND CALCULATIONS WITH SIGNED SEALS FOR ALL DELEGATED DESIGN ITEMS AND THEIR CONNECTIONS. DEFERRED SUBMITTALS SHALL BEAR THE STAMP AND SIGNATURE OF THE DESIGN PROFESSIONAL RESPONSIBLE FOR THEIR DESIGN.

THE STRUCTURAL ENGINEER OF RECORD WILL REVIEW STRUCTURAL DEFERRED SUBMITTALS TO VERIFY DESIGN CRITERIA IS COMPLIANT WITH THE APPROVED CONSTRUCTIONS DOCUMENTS.

DESIGN RESPONSIBILITY FOR THE FOLLOWING ENGINEERED SYSTEMS AND COMPONENT PARTS IS DELEGATED TO A QUALIFIED DELEGATED PROFESSIONAL ENGINEER REGISTERED IN THE STATE OF NORTH CAROLINA SELECTED BY THE CONTRACTOR. STRUCTURAL DELEGATED DESIGN ITEMS REQUIRING DEFERRED SUBMITTALS INCLUDE, BUT ARE NOT LIMITED TO:

STRUCTURAL STEEL CONNECTIONS EXCEPT FOR PRIMARY LATERAL FORCE RESISTING SYSTEM CONNECTIONS, COLUMN BASE PLATE CONNECTIONS AND CONNECTIONS WHERE SPECIFIC WELD SIZES AND LENGTHS, BOLT SIZES AND QUANTITY, PLATE SIZES AND OTHER CONNECTION COMPONENTS ARE NOTED. WHERE SECTIONS AND DETAILS DO NOT SHOW SPECIFIC CONNECTION COMPONENT INFORMATION, CONNECTIONS SHOWN ARE SCHEMATIC REPRESENTATIONS AND REQUIRE DESIGN BY THE CONTRACTOR. DESIGN AND DETAIL DELEGATED ENGINEERED SYSTEM CONNECTIONS TO RESIST THE LOADS INDICATED.

CURTAIN WALL SYSTEMS.

OPEN WEB STEEL JOISTS, BRIDGING, BRACING CONNECTIONS AND RELATED COMPONENTS.

NRW ENGINEERING
Structural Consultants
748 Lord Dunmore Drive, Suite 101
Virginia Beach, VA 23464
Phone 757-474-0912
Fax 757-474-0919
NC license C-1393

MATERIALS KEYING LEGEND

GENERAL NOTES

KEY PLAN

SCO ID #23-26923-01A

NO	REVISION	DATE

SEAL
NORTH CAROLINA PROFESSIONAL 022838 ENGINEER KEVIN M. ROOMSBURG
10/15/2024

JKF ARCHITECTURE
625 LYNNDALE CT., SUITE F, GREENVILLE, NC 27858 252-355-1068

CRAVEN COMMUNITY COLLEGE
CORPORATE TRAINING CENTER
NEW BERN, NC

DRAWING TITLE
GENERAL NOTES

SCALE: NONE	DRAWING NO: S0.1
DRAWN: JSS	
CHECKED: KMR	
DATE: 9-1-2024	
PROJECT NO.: 2023-09	

© COPYRIGHT, JKF ARCHITECTURE PC. JOHN K. FARKAS, AIA

GENERAL NOTES:

NRW ENGINEERING
Structural Consultants
748 Lord Dunmore Drive, Suite 101
Virginia Beach, VA 23464
Phone 757-474-0912
Fax 757-474-0919
NC license C-1393

STEEL DECK NOTES:

1. STEEL DECK SHALL CONFORM TO THE LATEST EDITION OF THE AMERICAN IRON AND STEEL INSTITUTE (AISI), "SPECIFICATION FOR THE DESIGN OF COLD-FORMED STEEL STRUCTURAL STEEL MEMBERS" AND THE STEEL DECK INSTITUTE (SDI) "DESIGN MANUAL FOR COMPOSITE DECKS, FORM DECKS AND ROOF DECKS".
2. ATTACH ROOF DECK TO SUPPORTS WITH 5/8" DIAMETER ARC SPOT WELDS IN ALL RIBS WHERE SIDELAPS OCCUR AND AT ALL RIBS ALONG SUPPORTS. FASTEN ADJACENT DECK UNITS ALONG SIDELAPS WITH #10 SELF TAPPING HEX HEAD SCREWS AT 1/3 POINTS BETWEEN SUPPORTS. FASTEN EDGEMOST DECK PANEL TO SUPPORTS WITH 5/8" DIAMETER ARC SPOT WELDS AT SAME SPACING AS SIDELAP FASTENERS.
3. AS AN ALTERNATIVE TO ARC SPOT WELDS, MECHANICAL FASTENERS MAY BE USED. INSTALL POWDER-ACTUATED FASTENERS OR SCREW FASTENERS IN ACCORDANCE WITH THE MANUFACTURER'S RECOMMENDATIONS. PROVIDE EQUIVALENT LOAD VALUES SHOWING THE MECHANICAL FASTENERS MEET OR EXCEED THE PROVIDED LOAD CRITERIA. FASTENERS SHALL BE SDI LISTED FOR DIAPHRAGM DESIGN AND WIND UPLIFT, AND FM LISTED FOR FIRE RESISTANCE AND WIND UPLIFT. FASTENERS SHALL BE RECOGNIZED BY ICC-ES FOR DIAPHRAGM SHEAR STRENGTH IN ACCORDANCE WITH THE LATEST VERSION OF ICC-ES AC43.
4. SPAN DECK PERPENDICULAR TO SUPPORTS, CONTINUOUS OVER A MINIMUM OF THREE SPANS. PROVIDE FULL SHEETS ON EDGES OF DIAPHRAGMS.
5. WELDING SHALL BE IN ACCORDANCE WITH AWS D1.3, "STRUCTURAL WELDING CODE - SHEET STEEL". FIELD WELDS SHALL BE WIRE BRUSHED AND PAINTED WITH RICH ZINC PAINT.
6. PROVIDE SUPPORTS ON ALL SIDES OF DECK OPENINGS MEASURING GREATER THAN 12" ON ANY SIDE OF OPENING. SPAN SUPPORTS BETWEEN ADJACENT BEAMS OR JOISTS ON TWO SIDES. UNLESS OTHERWISE NOTED USE L4X4X1/4. COORDINATE OPENING SIZES, LOCATIONS, AND DETAILS WITH ARCHITECTURAL, MECHANICAL, PLUMBING, AND ELECTRICAL DRAWINGS.
7. DO NOT HANG OR SUPPORT ANY PERMANENT LOADS FROM METAL ROOF DECK.
8. DURING STEEL DECK ERECTION DISTRIBUTE CONSTRUCTION LOADS TO PREVENT DAMAGE TO DECK. CONCENTRATED CONSTRUCTION LOADS OF 150 POUNDS OR LESS DISTRIBUTED OVER A 1'-0" WIDE SECTION OF DECK SHALL NOT REQUIRE ANY FURTHER DISTRIBUTION. USE WORKING PLATFORMS FOR CONCENTRATED LOADS OF OVER 150 POUNDS, SUCH THAT THE RESULTING UNIFORM CONSTRUCTION LOAD ON THE DECK DOES NOT EXCEED 50 PSF.
9. DURING POURING OF CONCRETE OVER FLOOR DECKS TAKE CARE TO AVOID EXCESSIVE CONCRETE HEAPING. POUR CONCRETE OVER BEAMS AND SPREAD TO THE CENTER OF THE DECK.

COLD-FORMED STEEL FRAMING NOTES:

1. EXTERIOR WALL STUDS FOR THIS STRUCTURE HAS BEEN DESIGN IN ACCORDANCE WITH THE AMERICAN IRON AND STEEL INSTITUTE (AISI) "SPECIFICATION FOR THE DESIGN OF COLD-FORMED STEEL STRUCTURAL MEMBERS" LATEST EDITION.
2. EXTERIOR WALL STUDS SHALL BE 600S200-54 SPACED AT 16" ON CENTER UNLESS OTHERWISE NOTED. STUDS SHALL BE FULL HEIGHT (NO SPLICES) FROM FOUNDATION TO ROOF. AT TWO SPAN CONDITION, PROVIDE WEB STIFFENERS AT INTERMEDIATE SUPPORT. STUDS SHALL HAVE THE MINIMUM EFFECTIVE PROPERTIES:
   Sxe= 1.002 IN^3 Ixe = 3.319 IN^4
3. TRACKS SHALL BE 600T150-54 UNLESS OTHERWISE NOTED. ATTACH EACH STUD TO TRACK WITH #10 TEK SCREWS EACH SIDE UNLESS OTHERWISE NOTED.
4. THE STUD DESIGNATION 600S200 INDICATES THE FOLLOWING:
   600 = OVERALL DEPTH IN INCHES (600 = 6" INCHES)
   S = SECTION TYPE (STUD, TRACK)
   200 = FLANGE WIDTH IN INCHES (200 = 2", 162 = 1 5/8")
   54 = THICKNESS IN MILS(68 = 14 GAGE, 54 = 16 GAGE, 43 = 18 GAGE)
5. ALL GALVANIZED STUDS 16 GAGE AND HEAVIER SHALL BE FORMED FROM STEEL CORRESPONDING TO THE REQUIREMENTS OF ASTM A653, GRADE 50, WITH MINIMUM YIELD OF 50,000 PSI.
6. ALL GALVANIZED STUDS LIGHTER THAN 18 GAGE AND LIGHTER, TRACK, BRIDGING, AND ACCESSORIES SHALL BE FORMED FROM STEEL CORRESPONDING TO THE REQUIREMENTS OF ASTM A653, GRADE 33, WITH A MINIMUM YIELD OF 33,000 P.S.I.
7. WELDING SHALL BE IN ACCORDANCE WITH AWS D1.3, "STRUCTURAL WELDING CODE - SHEET STEEL".
8. PROVIDE MECHANICAL BRIDGING OR FULL DEPTH BLOCKING AT 8'-0" ON CENTER OR AT 1/3 POINTS OF THE MEMBER SPAN, WHICHEVER IS LESS.
9. PROVIDE TEMPORARY BRACING AND GUYING OF COLD FORMED STEEL FRAMING FOR THE SAFETY OF THE STRUCTURE AND WORK PERSONNEL. BRACING SHALL REMAIN UNTIL NO LONGER REQUIRED FOR SAFE SUPPORT OF FRAMING.
10. ALL CONNECTION SCREWS SHALL BE ZINC COATED (UON).

DESIGN CRITERIA NOTES:

1. LOADS USED IN THE DESIGN OF THIS STRUCTURE ARE AS FOLLOWS:
2. UNIFORM LIVE LOADS:
   SLAB ON GRADE
   OFFICE AND PUBLIC SPACES 100 PSF
   MECHANICAL ROOM 150 PSF
   ROOF 20 PSF
   *(NO REDUCTION IN ROOF LIVE LOAD)
3. UNIFORM DESIGN DEAD LOADS:
   ROOF CONSTRUCTION 20 PSF
4. ROOF SNOW LOADS:
   RISK CATEGORY = III
   GROUND SNOW LOADS Pg = 10 PSF
   SNOW EXPOSURE FACTOR Ce = 1.0
   SNOW LOAD IMPORTANCE FACTOR III = 1.1
   THERMAL FACTOR Ct = 1.0
   RAIN ON SNOW SURCHARGE = 5 PSF
   UNIFORM ROOF DESIGN SNOW LOAD: Pf = 11 PSF
5. WIND LOADS:
   RISK CATEGORY = III
   ULTIMATE WIND SPEED = 141 MPH
   NOMINAL WIND SPEED (ASD) = 109.2 MPH
   EXPOSURE CATEGORY (MAIN WINDFORCE-RESISTING SYSTEM): C
   EXPOSURE CATEGORY (COMPONENTS AND CLADDING): C
   INTERNAL PRESSURE COEFFICIENT: ±0.18 (ENCLOSED)

   COMPONENTS AND CLADDING: WIND PRESSURE TO BE USED FOR DESIGN OF EXTERIOR COMPONENTS AND CLADDING MATERIALS NOT SPECIFICALLY DESIGNED ON THESE DRAWINGS SHALL BE PER TABLE BELOW:

COMPONENTS AND CLADDING WIND PRESSURES (LRFD LEVEL)

AREA (SF)	ROOF ZONES										WALL ZONES			
	1		2		2'		3		3'		4		5	
A<10	+19.3	-51.4	+19.3	-59.5	+19.3	-70.3	+19.3	-79.6	+19.3	-111.7	+43.4	-47.0	+43.4	-57.9
A=/>100	+16.0	-51.4	+16.0	-55.5	+16.0	-67.5	+16.0	-55.5	+16.0	-71.5	+37.0	-40.6	+37.0	-45.1

INTERPOLATE BETWEEN AREAS INDICATED.
MULTIPLY ULTIMATE PRESSURES BY 0.6 TO EQUATE TO ALLOWABLE PRESSURE.
CORNER ZONES A EQUALS 6.4 FEET.
REFER TO SKETCH FOR ZONE DEFINITIONS.
TO CALCULATE NET UPLIFT, SUBTRACT 9 PSF FROM PRESSURES LISTED ABOVE.

FOR OVERHANG VALUES MULTIPLY ZONE 1, 2, AND 2' BY 1.0. MULTIPLY ZONE 3 BY 1.15.

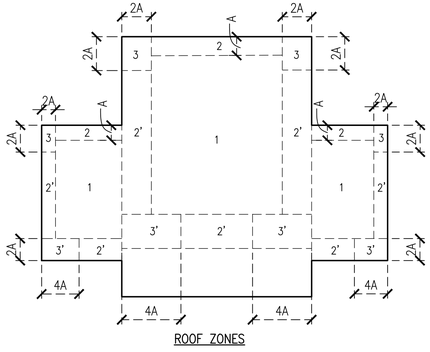

ROOF ZONES

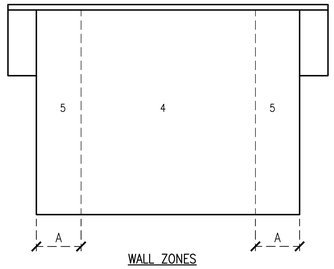

WALL ZONES

6. SEISMIC LOADS:
   RISK CATEGORY III
   IMPORTANCE FACTOR I = 1.25
   Ss = 0.127g
   S1 = 0.063g
   SOIL SITE CLASS D
   Sds = 0.135
   Sd1 = 0.101
   SEISMIC DESIGN CATEGORY B
   BASIC SEISMIC FORCE RESISTING SYSTEM: STRUCTURAL STEEL SYSTEMS NOT SPECIFICALLY DESIGNED FOR SEISMIC RESISTANCE
   RESPONSE MODIFICATION FACTOR, R=3.0
   SEISMIC RESPONSE COEFFICIENT, Cs = 0.056
   ANALYSIS PROCEDURE USED: EQUIVALENT LATERAL FORCE

STRUCTURAL ABBREVIATIONS

ARCH	ARCHITECT
AB	ANCHOR BOLT
BLDG	BUILDING
BOTT	BOTTOM
CFS	COLD-FORMED STEEL
CJ	CONTROL JOINT
CL/℄	CENTER LINE
CLR	CLEAR
COL	COLUMN
CONC	CONCRETE
CONN	CONNECTION
CONST	CONSTRUCTION
CONT	CONTINUOUS
DWGS	DRAWINGS
DIA/ø	DIAMETER
EA	EACH
ELEV	ELEVATION
ENG	ENGINEERED
ETC	AND OTHER THINGS
EXIST	EXISTING
FD	FLOOR DRAIN
FO	FACE OF
FOB	FACE OF BRICK
FIN	FINISH
FTG	FOOTING
GALV	GALVANIZED
INSUL	INSULATION
JT	JOINT
K	KIPS
LLH	LONG LEG HORIZONTAL
LLV	LONG LEG VERTICAL
MAX	MAXIMUM
MFGR/MANUF	MANUFACTURER
MECH	MECHANICAL
MIN	MINIMUM
MISC	MISCELLANEOUS
NTS	NOT TO SCALE
OC	ON CENTER
PSI	POUNDS PER SQUARE INCH
PSF	POUNDS PER SQUARE FOOT
REINF	REINFORCING
SCHED	SCHEDULE
SIM	SIMILAR
SJ	SAW JOINT
SPA	SPACING/SPACES
T&B	TOP AND BOTTOM
TYP	TYPICAL
UON	UNLESS OTHERWISE NOTED
VERT	VERTICAL
WWF	WELDED WIRE FABRIC
&	AND
@	AT
#	NUMBER/POUNDS

MATERIALS KEYING LEGEND

GENERAL NOTES

KEY PLAN

SCO ID #23-26923-01A

NO	REVISION	DATE

SEAL
NORTH CAROLINA PROFESSIONAL
022830
10/15/2024
ENGINEER
KELVIN M. ROOMSBURG

JKF ARCHITECTURE
625 LYNNDALE CT., SUITE F, GREENVILLE, NC 27858 252-355-1068

CRAVEN COMMUNITY COLLEGE
CORPORATE TRAINING CENTER
NEW BERN, NC

DRAWING TITLE
GENERAL NOTES

SCALE	DRAWING NO
NONE	S0.2
DRAWN: JSS	
CHECKED: KMR	
DATE: 9-1-2024	
PROJECT NO.: 2023-09	

© COPYRIGHT, JKF ARCHITECTURE PC, JOHN K. FARKAS, AIA

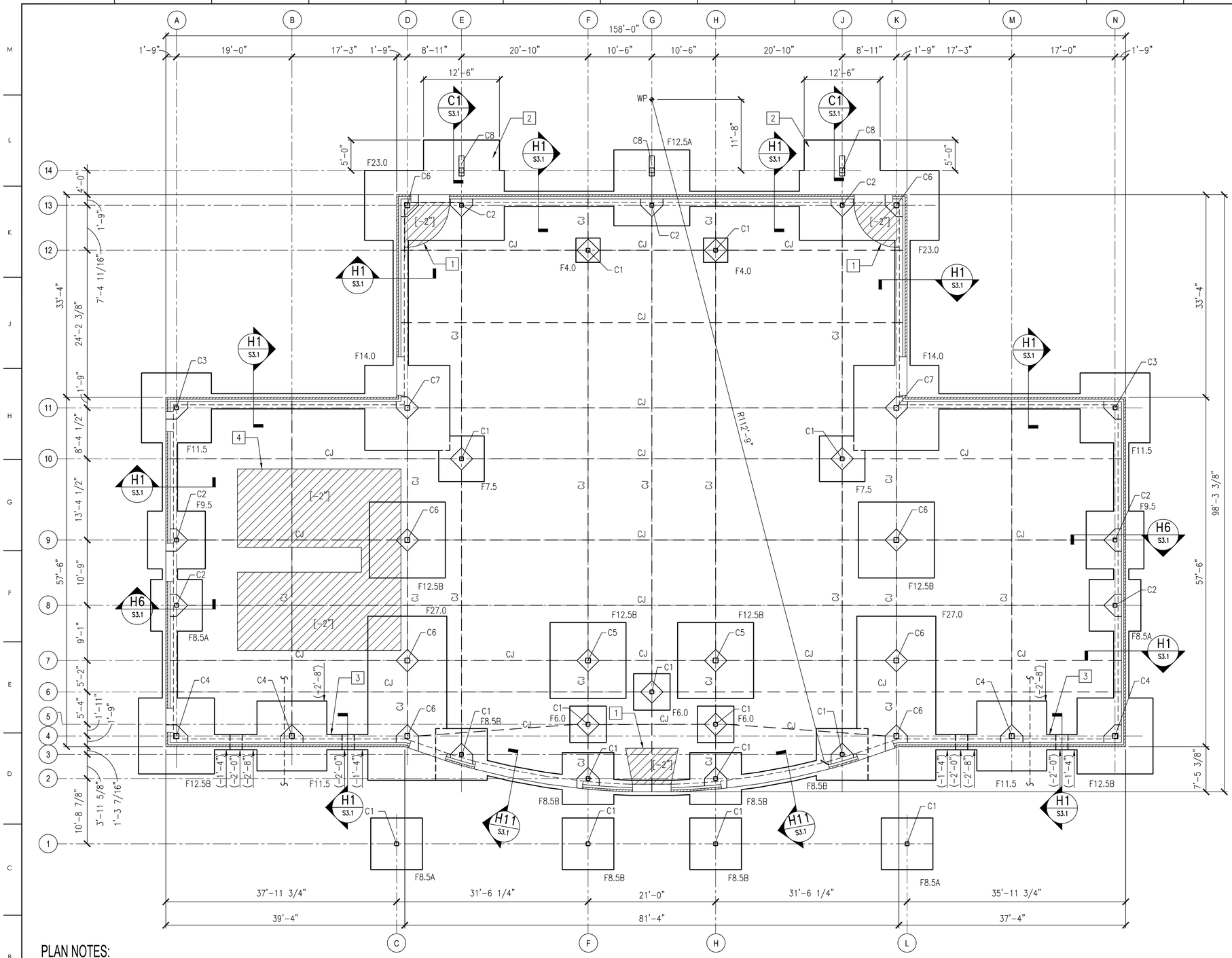

KEY NOTES:

1. DEPRESS SLAB AT ENTRY MAT. REFER TO ARCH DWGS FOR EXACT SIZE AND LOCATION. REFER TO TYPICAL DEPRESSED SLAB DETAIL ON S5.1.
2. 12.5'x5'x24" COLUMN FOOTING EXTENSION FOR SLOPING COLUMN. REINFORCE WITH 5-#7 BARS IN THE SHORT DIRECTION AND 11-#7 IN THE LONG DIRECTION. USE TOP AND BOTTOM REINFORCING.
3. STEP FOOTING AS REQUIRED AT PLUMBING LINES, REFER TO TYPICAL STEPPED FOOTING DETAIL ON S5.1
4. DEPRESS SLAB IN BATHROOMS. REFER TO ARCH DWGS FOR EXACT SIZE AND LOCATION. REFER TO TYPICAL DEPRESSED SLAB DETAIL ON S5.1.

PLAN NOTES:

1. DATUM FOR ALL ELEVATIONS GIVEN ON THIS PLAN IS FINISHED FIRST FLOOR ELEVATION = 0'-0". REFER TO CIVIL DRAWINGS FOR ACTUAL FINISHED FLOOR ELEVATION.
2. TOP OF CONCRETE SLAB IS AT +0'-0" UNLESS OTHERWISE INDICATED THUS [-_____] ON PLAN. REFER TO ARCHITECTURAL DRAWINGS FOR EXACT EXTENT OF SLAB DEPRESSIONS.
3. UNLESS OTHERWISE NOTED ON PLAN OR SHOWN IN SECTIONS OR DETAILS, ALL CONTINUOUS WALL FOOTINGS SHALL BE 2'-6" WIDE x 1'-4" THICK AND REINFORCED WITH 4 - # 5 BOTTOM CONTINUOUS WITH #4 @ 48" OC SUPPORT BARS
4. UNLESS OTHERWISE NOTED PROVIDE 4" CONCRETE SLAB ON GRADE ON 15 MIL VAPOR RETARDER ON 4" POROUS FILL MATERIAL CONSISTING OF NCDOT NO. 57 STONE. REINFORCE SLAB WITH 6 X 6 - W2.9 X W2.9 WWF PLACED 1" CLEAR FROM TOP OF SLAB. TOP OF SLAB ELEVATION IS AT 0'-0" UNLESS OTHERWISE NOTED THUS [+/-0"] ON PLAN
5. UNLESS OTHERWISE NOTED THUS (-_____) ON PLAN, TOP OF ALL WALL AND COLUMN FOOTINGS SHALL BE AT ELEVATION -1'-4", INDICATING DISTANCE BELOW DATUM.
6. NO FOUNDATION WORK SHALL BE INSTALLED UNTIL ALL UNDERGROUND UTILITIES, ETC. HAVE BEEN COORDINATED WITH FOUNDATION LOCATIONS AND ELEVATIONS.

N

0 4' 8' 16'

SCALE: 1/8" = 1'-0"

FOUNDATION PLAN A15
1/8" = 1"-0"

NRW ENGINEERING
Structural Consultants
748 Lord Dunmore Drive, Suite 101
Virginia Beach, VA 23464
Phone 757-474-0912
Fax 757-474-0919
NC license C-1393

MATERIALS KEYING LEGEND

GENERAL NOTES

KEY PLAN

SCO ID #23-26923-01A

NO	REVISION	DATE

SEAL
NORTH CAROLINA PROFESSIONAL
027259
10/15/2024
ENGINEER
KEVIN M. ROOMSBURG

JKF ARCHITECTURE
625 LYNNDALE CT., SUITE F, GREENVILLE, NC 27858 252-355-1068

CRAVEN COMMUNITY COLLEGE
CORPORATE TRAINING CENTER
NEW BERN, NC

DRAWING TITLE
FOUNDATION PLAN

SCALE	1/8" = 1'-0"
DRAWN	JSS
CHECKED	KMR
DATE	9-1-2024
PROJECT NO.	2023-09
DRAWING NO	S1.1

COPYRIGHT. JKF ARCHITECTURE PC. JOHN K. FARKAS, AIA

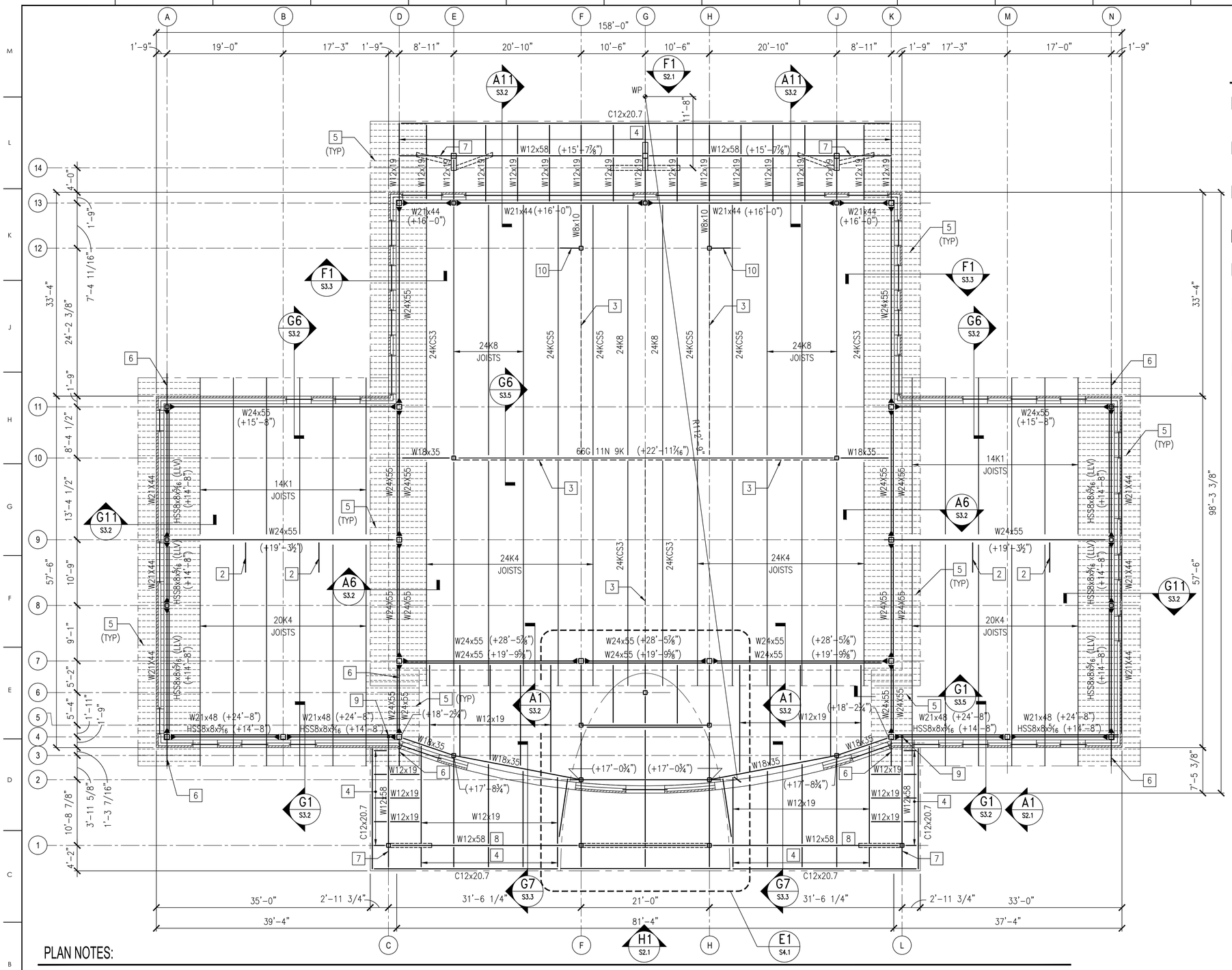

KEY NOTES:

1. L2½"X2½"X5/16 BOTTOM FLANGE BEAM BRACING BETWEEN JOIST AND BEAM. REFER TO TYPICAL JOIST TO BEAM CONNECTION DETAIL FOR ADDITIONAL INFORMATION.
2. L2½"X2½"X5/16 BOTTOM FLANGE BEAM BRACING FROM BEAM BOTTOM FLANGE TO JOIST TOP CHORD OR BEAM TOP FLANGE.
3. OPERABLE PARTITION, REFER TO ARCHITECTURAL DRAWINGS AND TYPICAL OPERABLE PARTITION HANGER DETAIL ON S5.3.
4. W12x19 OUTLOOKERS. REFER TO OUTLOOKER MOMENT CONNECTION DETAIL ON S5.4.
5. HSS3½x1½x¼ OUTLOOKERS SPACED AT 12" OC (MAX). REFER TO TYPICAL DETAILS ON S5.3.
6. BEAM EXTENSION, REFER TO TYPICAL BEAM EXTENSION DETAILS ON S5.4
7. W12X58 STEEL BEAM BEARING ON COLUMN. REFER TO TYPICAL DETAIL ON S5.2
8. BOTTOM OF BEAM AT CENTERLINE OF COLUMN GRID 1 = +14'-3".
9. PROVIDE HSS4x4x¼ POST FROM HSS8x8 FOR SUPPORT OF W12. REFER TO POST TO BEAM DETAIL ON S5.4
10. PROVIDE L3x3x¼ BRACE FROM COLUMN TO TOP OF JOIST CHORD.

PLAN NOTES:

1. DATUM FOR ALL ELEVATIONS GIVEN ON THIS PLAN IS FINISHED FIRST FLOOR ELEVATION = 0'-0". REFER TO CIVIL DRAWINGS FOR ACTUAL FINISHED FLOOR ELEVATION.
2. ROOF CONSTRUCTION IS 1½" DEEP, 20 GA. TYPE 'B' STEEL ROOF DECK SUPPORTED ON OPEN WEB JOIST ON STEEL BEAMS, U.O.N.
3. PROVIDE L4x4x5/16 ANGLE FRAMING EACH SIDE OF ROOF OPENING. FOR LOCATION AND DIMENSION OF ROOF OPENINGS REFER TO ARCHITECTURAL AND MECHANICAL DRAWINGS.
4. REFER TO FOUNDATION PLAN FOR COLUMN SIZES.
5. BEAM TO MOMENT CONNECTIONS ARE INDICATED THUS: (▶——) ON PLAN. REFER TO TYPICAL MOMENT CONNECTION DETAILS FOR ADDITIONAL INFORMATION.
6. TOP OF STEEL BEAM ELEVATIONS INDICATED THUS (+____) UNLESS OTHERWISE NOTED IN SECTIONS. SLOPE BEAMS AS REQUIRED TO ACHIEVE ROOF SLOPE.
7. FOR TYPICAL DETAILS REFER TO SHEETS S5.1 THRU S5.4.
8. FOR GENERAL NOTES REFER TO SHEETS S0.1. & S0.2.
9. JOIST EXTENDED ENDS MUST BE DESIGNED TO SAFELY SUPPORT AN UNIFORM LOAD OF 300 PLF OR 200 LB LOCATED AT THE END OF JOIST EXTENSION.
10. SLOPING JOISTS SHALL HAVE A JOIST SEAT OF 5½" MEASURED AT CL OF STEEL BEAM.

N

0 4' 8' 16'
SCALE: 1/8" = 1'-0"

ROOF FRAMING PLAN 1/8" = 1'-0" A15

NRW ENGINEERING
Structural Consultants
748 Lord Dunmore Drive, Suite 101
Virginia Beach, VA 23464
Phone 757-474-0912
Fax 757-474-0919
NC license C-1393

MATERIALS KEYING LEGEND

GENERAL NOTES

KEY PLAN

SCO ID #23-26923-01A

NO	REVISION	DATE

SEAL
NORTH CAROLINA PROFESSIONAL 022830 10/15/2024 ENGINEER KEVIN M. ROOMSBURG

JKF ARCHITECTURE
625 LYNNDALE CT., SUITE F, GREENVILLE, NC 27858 252-355-1068

CRAVEN COMMUNITY COLLEGE
CORPORATE TRAINING CENTER
NEW BERN, NC

DRAWING TITLE
ROOF FRAMING PLAN

SCALE	1/8" = 1'-0"
DRAWN	JSS
CHECKED	KMR
DATE	9-1-2024
PROJECT NO.	2023-09
DRAWING NO	S1.2

© COPYRIGHT, JKF ARCHITECTURE PC, JOHN K. FARKAS, AIA

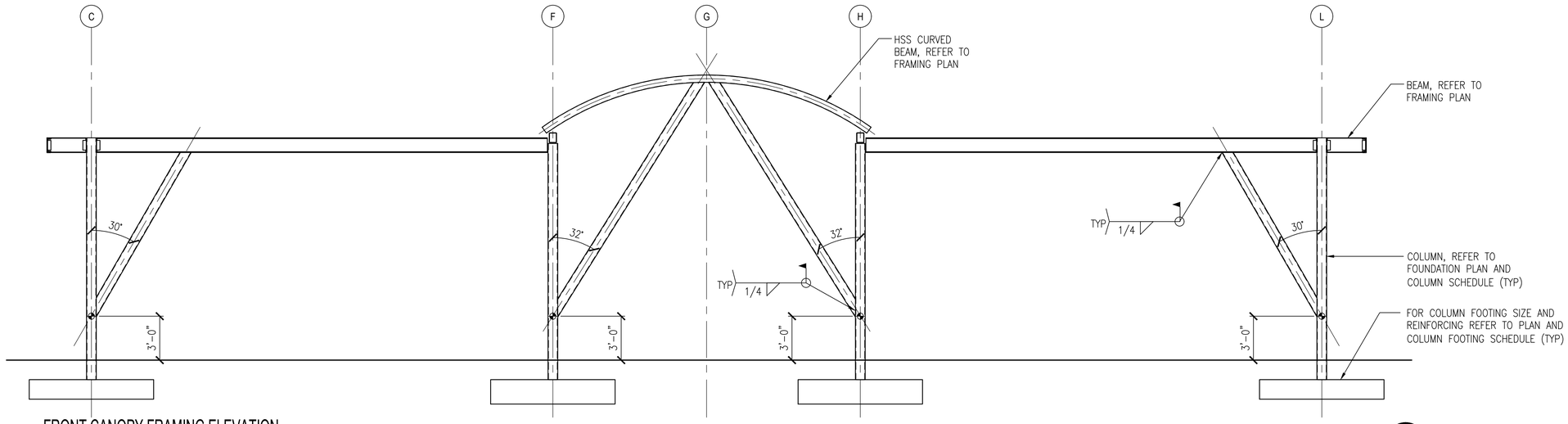

FRONT CANOPY FRAMING ELEVATION

SCALE: 1/4" = 1'-0"

H1

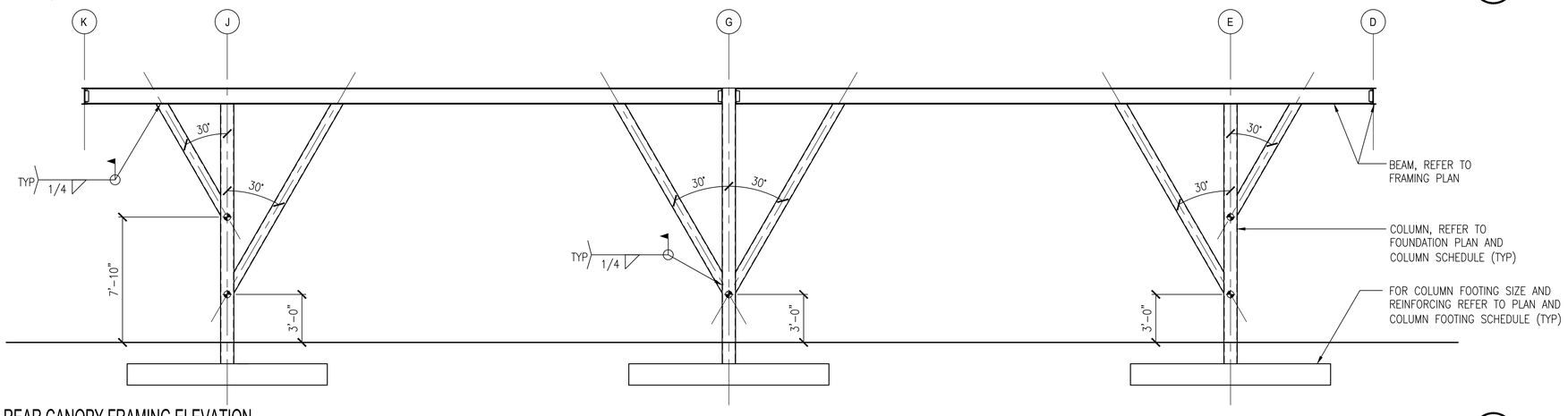

REAR CANOPY FRAMING ELEVATION

SCALE: 1/4" = 1'-0"

F1

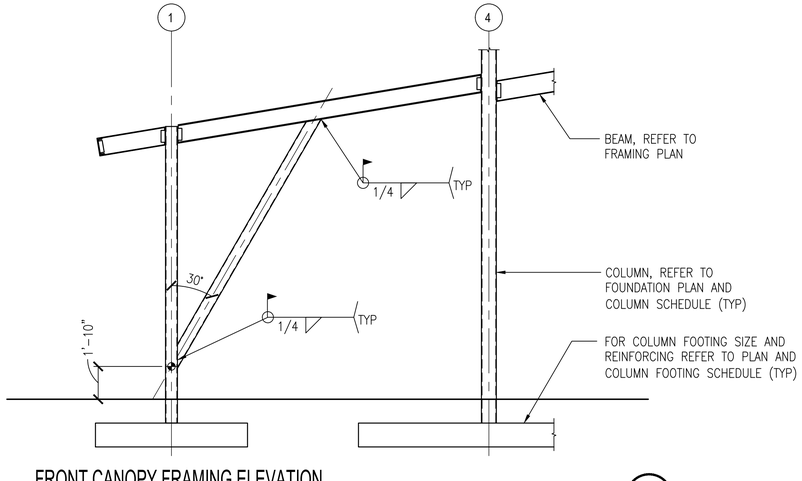

FRONT CANOPY FRAMING ELEVATION

SCALE: 1/4" = 1'-0"

A1

NOTES:

1. ALL EXTERIOR STEEL MUST BE HOT-DIPPED GALVANIZED.
2. ALL DIAGONAL MEMBERS MUST BE HSS6x2x¼ (LSV).
3. COORDINATE EXTERIOR COLUMN AND DIAGONAL WRAPS WITH ARCH DWGS.

0 2' 4' 8'

SCALE: 1/4" = 1'-0"

NRW ENGINEERING
Structural Consultants
748 Lord Dunmore Drive, Suite 101
Virginia Beach, VA 23464
Phone 757-474-0912
Fax 757-474-0919
NC license C-1393

MATERIALS KEYING LEGEND

GENERAL NOTES

KEY PLAN

SCO ID #23-26923-01A

NO	REVISION	DATE

SEAL

NORTH CAROLINA PROFESSIONAL 027259 ENGINEER KEVIN M. ROOMSBURG 10/15/2024

JKF ARCHITECTURE
625 LYNNDALE CT., SUITE F, GREENVILLE, NC 27858 252-355-1068

CRAVEN COMMUNITY COLLEGE
CORPORATE TRAINING CENTER
NEW BERN, NC

DRAWING TITLE
CANOPY FRAMING ELEVATIONS

SCALE: 1/4" = 1'-0"	DRAWING NO: S2.1
DRAWN: JSS	
CHECKED: KMR	
DATE: 9-1-2024	
PROJECT NO.: 2023-09	

© COPYRIGHT, JKF ARCHITECTURE PC. JOHN K. FAIRKAS, AIA

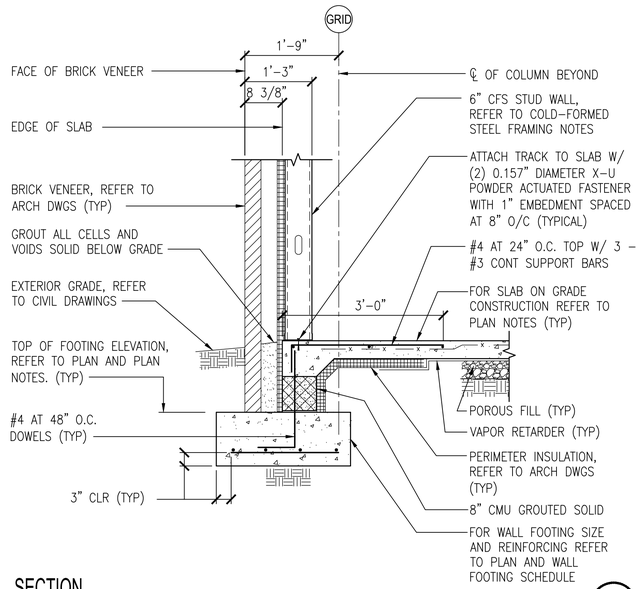

SECTION

SCALE: 3/4" = 1'-0"

H1

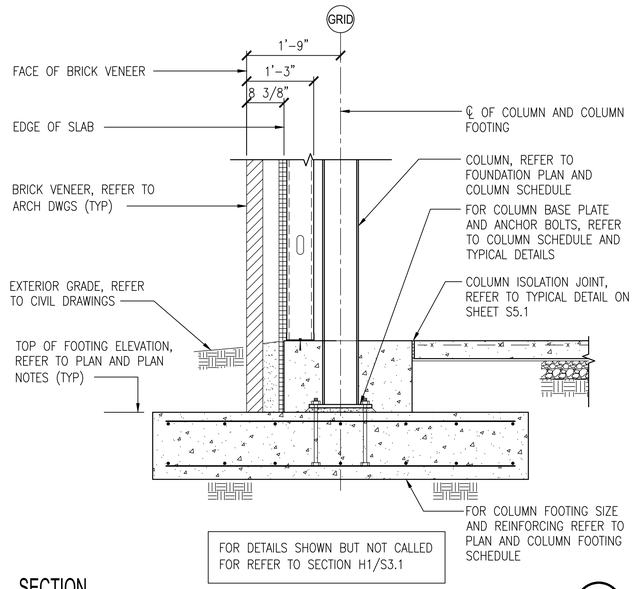

FOR DETAILS SHOWN BUT NOT CALLED FOR REFER TO SECTION H1/S3.1

SECTION

SCALE: 3/4" = 1'-0"

H6

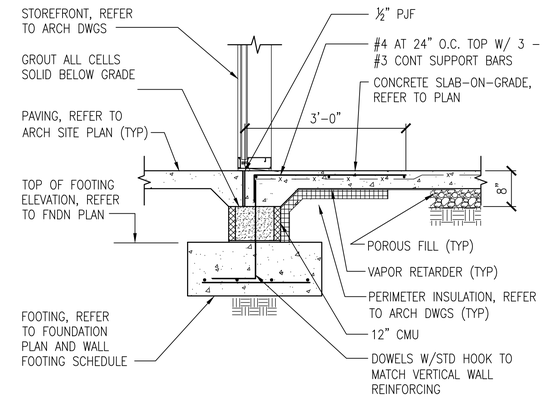

SECTION

SCALE: 3/4" = 1'-0"

H11

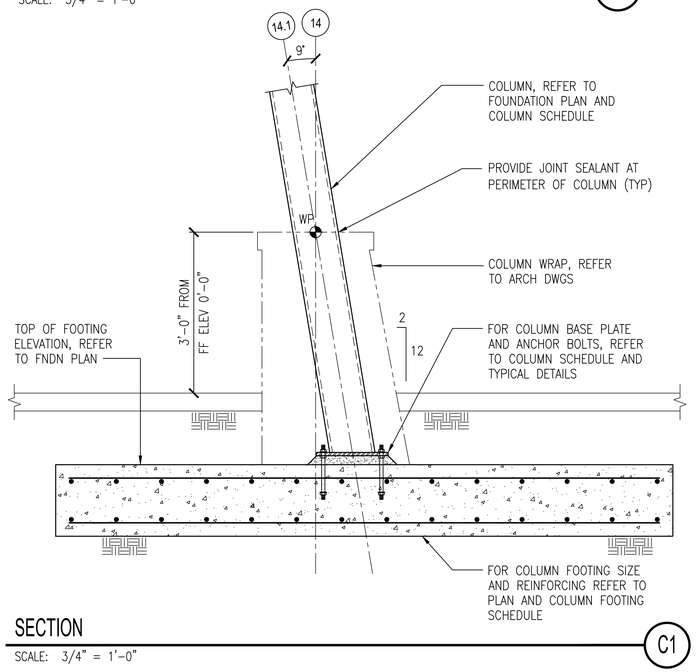

SECTION

SCALE: 3/4" = 1'-0"

C1

NRW ENGINEERING
Structural Consultants
748 Lord Dunmore Drive, Suite 101
Virginia Beach, VA 23464
Phone 757-474-0912
Fax 757-474-0919
NC license C-1393

MATERIALS KEYING LEGEND

GENERAL NOTES

KEY PLAN

SCO ID #23-26923-01A

NO	REVISION	DATE

SEAL

NORTH CAROLINA PROFESSIONAL 022530 ENGINEER KEVIN M. ROMSBURG 10/15/2024

JKF ARCHITECTURE
625 LYNNDALE CT., SUITE F, GREENVILLE, NC 27858 252-355-1068

CRAVEN COMMUNITY COLLEGE
CORPORATE TRAINING CENTER
NEW BERN, NC

DRAWING TITLE: SECTIONS

SCALE	3/4" = 1'-0"
DRAWN	JSS
CHECKED	KMR
DATE	9-1-2024
PROJECT NO.	2023-09
DRAWING NO	S3.1

© COPYRIGHT, JKF ARCHITECTURE PC, JOHN K. FARKAS, AIA

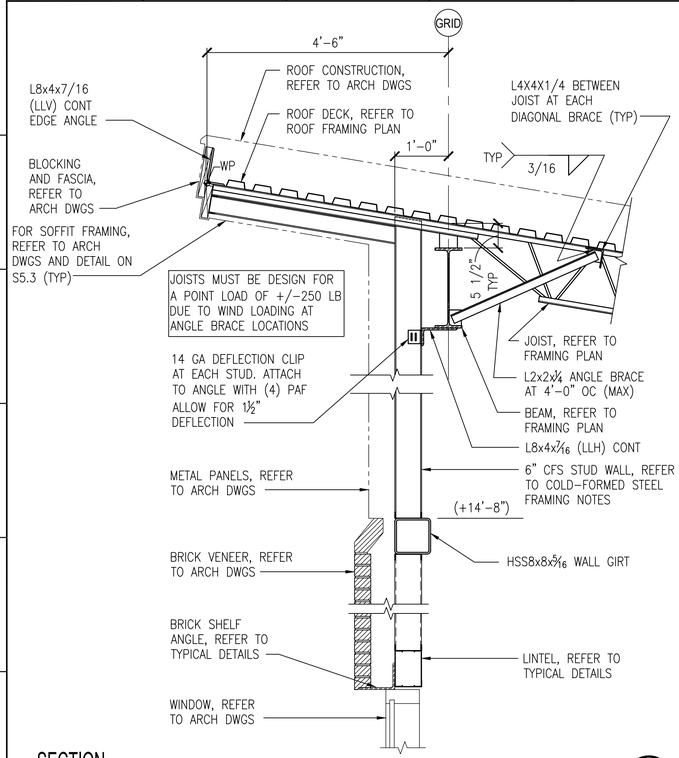

SECTION — G1

SCALE: 3/4" = 1'-0"

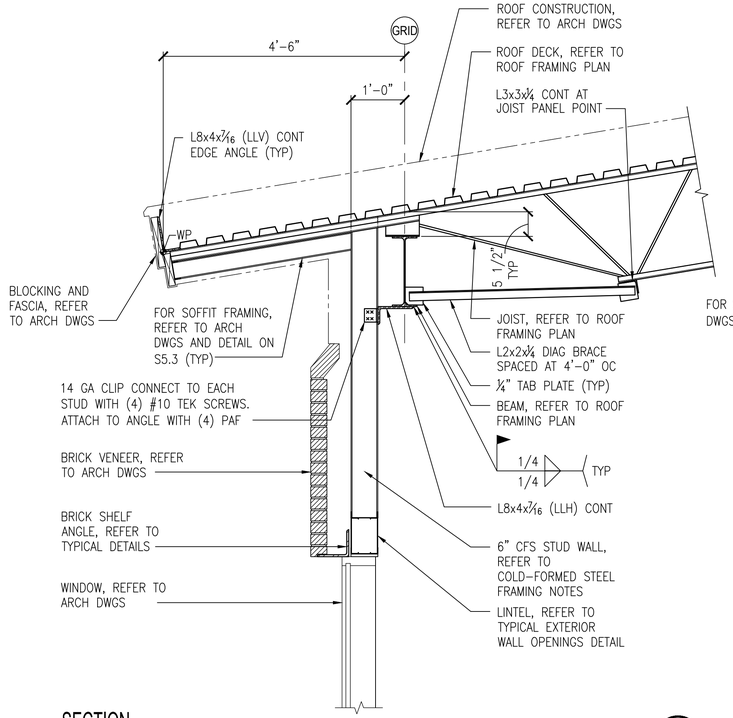

SECTION — G6

SCALE: 3/4" = 1'-0"

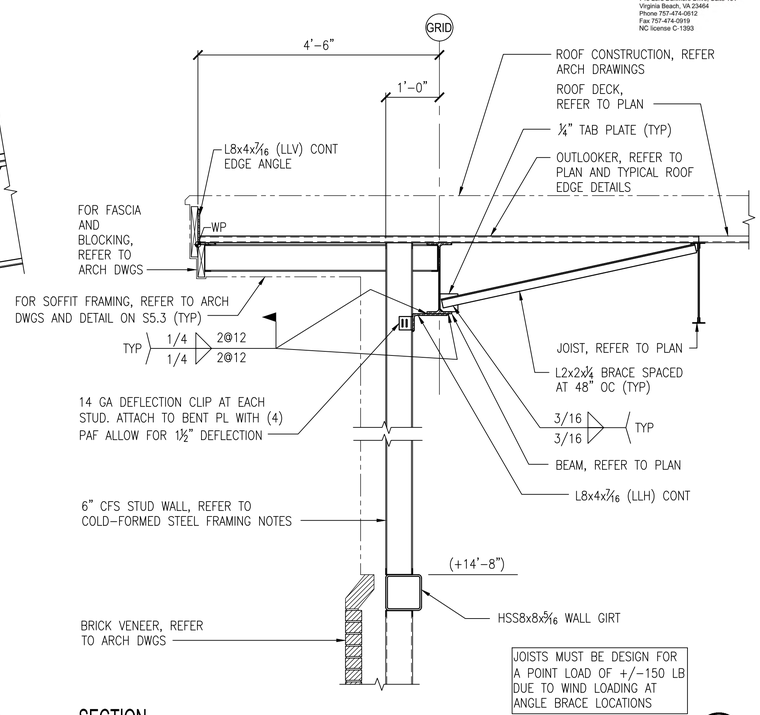

SECTION — G11

SCALE: 3/4" = 1'-0"

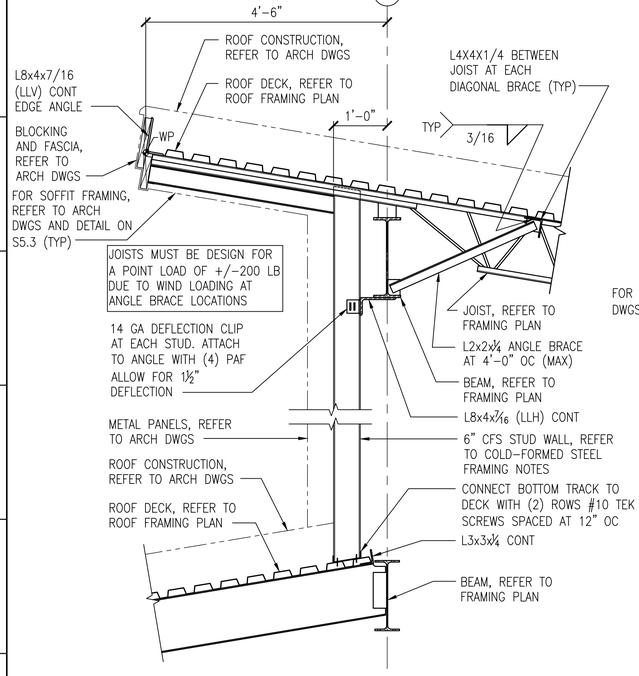

SECTION — A1

SCALE: 3/4" = 1'-0"

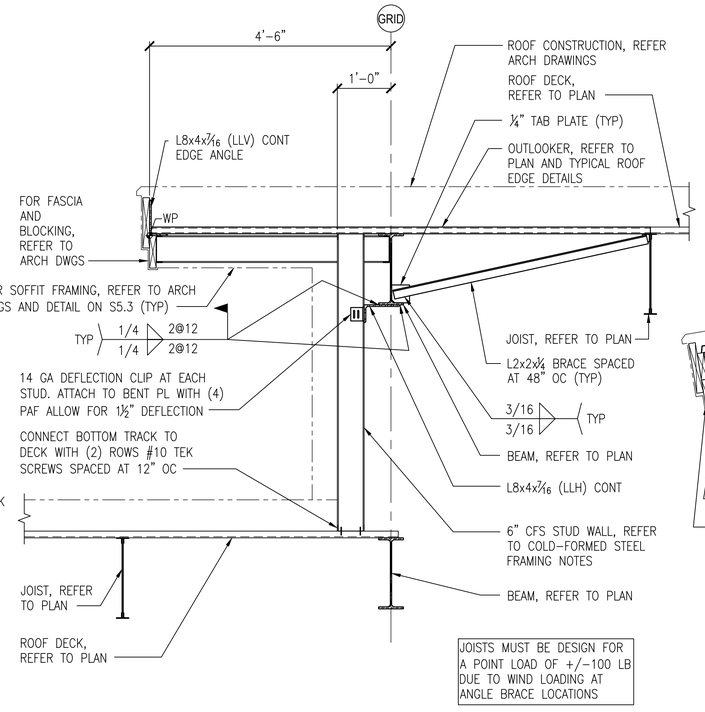

SECTION — A6

SCALE: 3/4" = 1'-0"

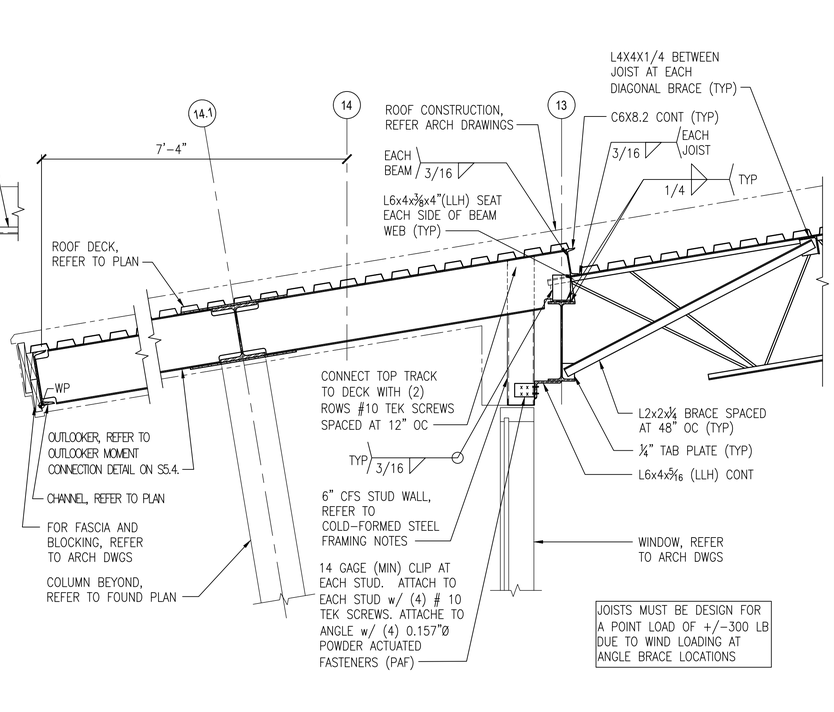

SECTION — A11

SCALE: 3/4" = 1'-0"

NRW ENGINEERING
Structural Consultants
748 Lord Dunmore Drive, Suite 101
Virginia Beach, VA 23464
Phone 757-474-0912
Fax 757-474-0919
NC license C-1393

MATERIALS KEYING LEGEND

GENERAL NOTES

KEY PLAN

SCO ID #23-26923-01A

NO	REVISION	DATE

SEAL

NORTH CAROLINA PROFESSIONAL ENGINEER SEAL 022630 10/15/2024 KEVIN M. ROOMSBURG

JKF ARCHITECTURE

625 LYNNDALE CT., SUITE F, GREENVILLE, NC 27858 252-355-1068

CRAVEN COMMUNITY COLLEGE
CORPORATE TRAINING CENTER
NEW BERN, NC

DRAWING TITLE: SECTIONS

SCALE	3/4" = 1'-0"
DRAWN	JSS
CHECKED	KMR
DATE	9-1-2024
PROJECT NO.	2023-09
DRAWING NO	S3.2

© COPYRIGHT, JKF ARCHITECTURE PC, JOHN K. FARKAS, AIA

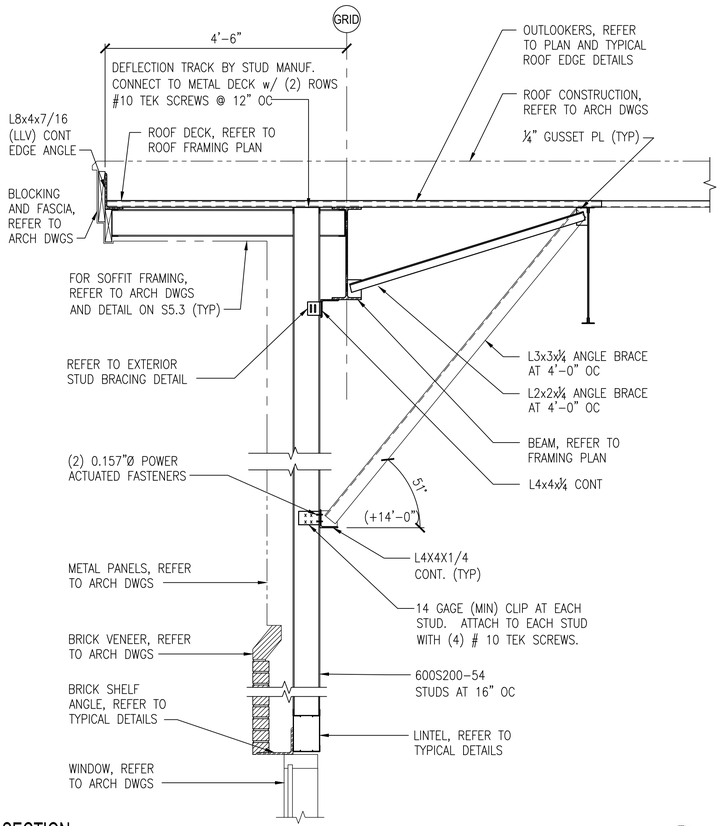

SECTION

SCALE: 3/4" = 1'-0"

F1

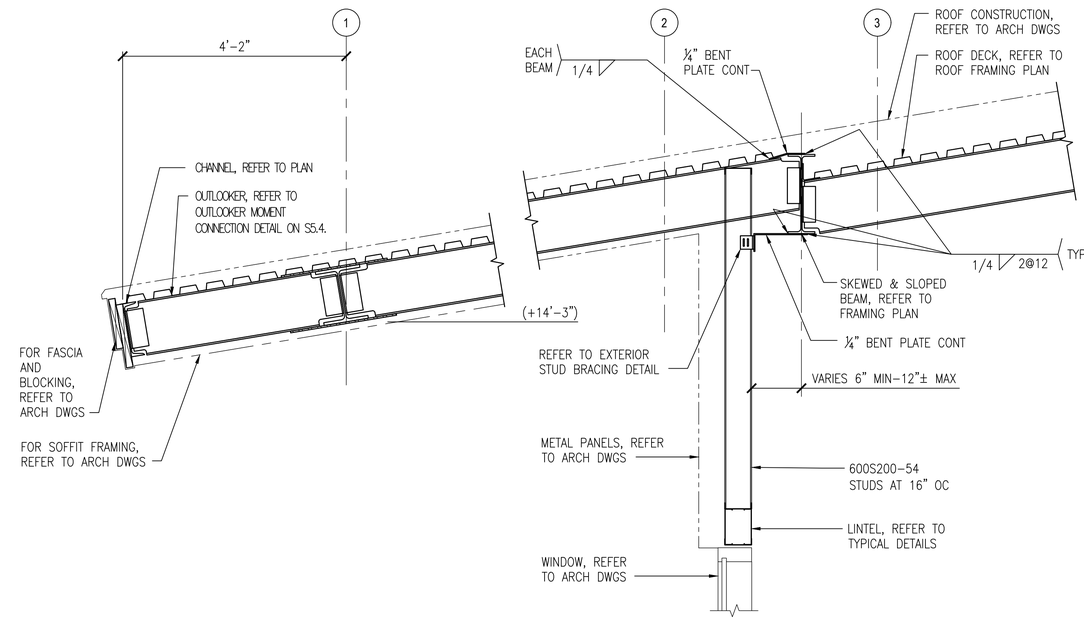

SECTION

SCALE: 3/4" = 1'-0"

G7

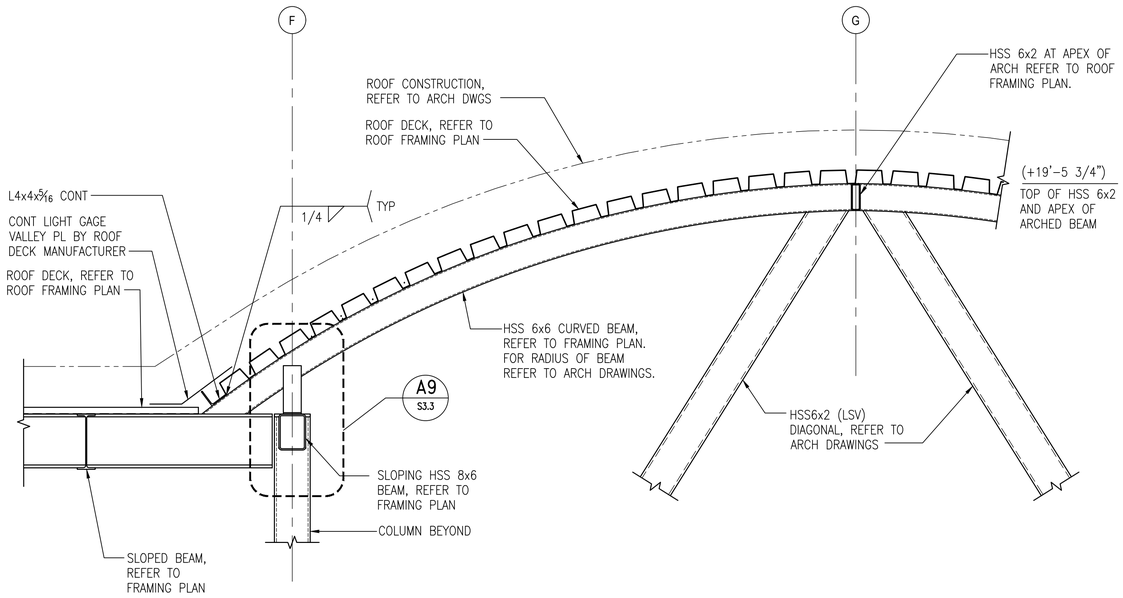

SECTION

SCALE: 3/4" = 1'-0"

A1

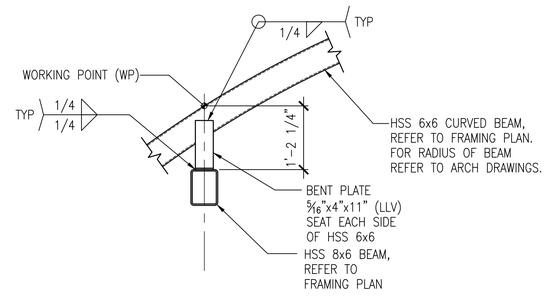

HSS 6X6 SEAT DETAIL

SCALE: 3/4" = 1'-0"

A9

NRW ENGINEERING
Structural Consultants
748 Lord Dunmore Drive, Suite 101
Virginia Beach, VA 23464
Phone 757-474-0912
Fax 757-474-0919
NC license C-1393

MATERIALS KEYING LEGEND

GENERAL NOTES

KEY PLAN

SCO ID #23-26923-01A

NO	REVISION	DATE

SEAL

NORTH CAROLINA PROFESSIONAL ENGINEER SEAL 022530 10/15/2024 KEVIN M. ROOKSBURG

JKF ARCHITECTURE

625 LYNNDALE CT., SUITE F, GREENVILLE, NC 27858 252-353-1068

CRAVEN COMMUNITY COLLEGE
CORPORATE TRAINING CENTER
NEW BERN, NC

DRAWING TITLE: SECTIONS

SCALE	3/4" = 1'-0"
DRAWN	JSS
CHECKED	KMR
DATE	9-1-2024
PROJECT NO.	2023-09
DRAWING NO	S3.3

COPYRIGHT, JKF ARCHITECTURE PC, JOHN K. FARKAS, AIA

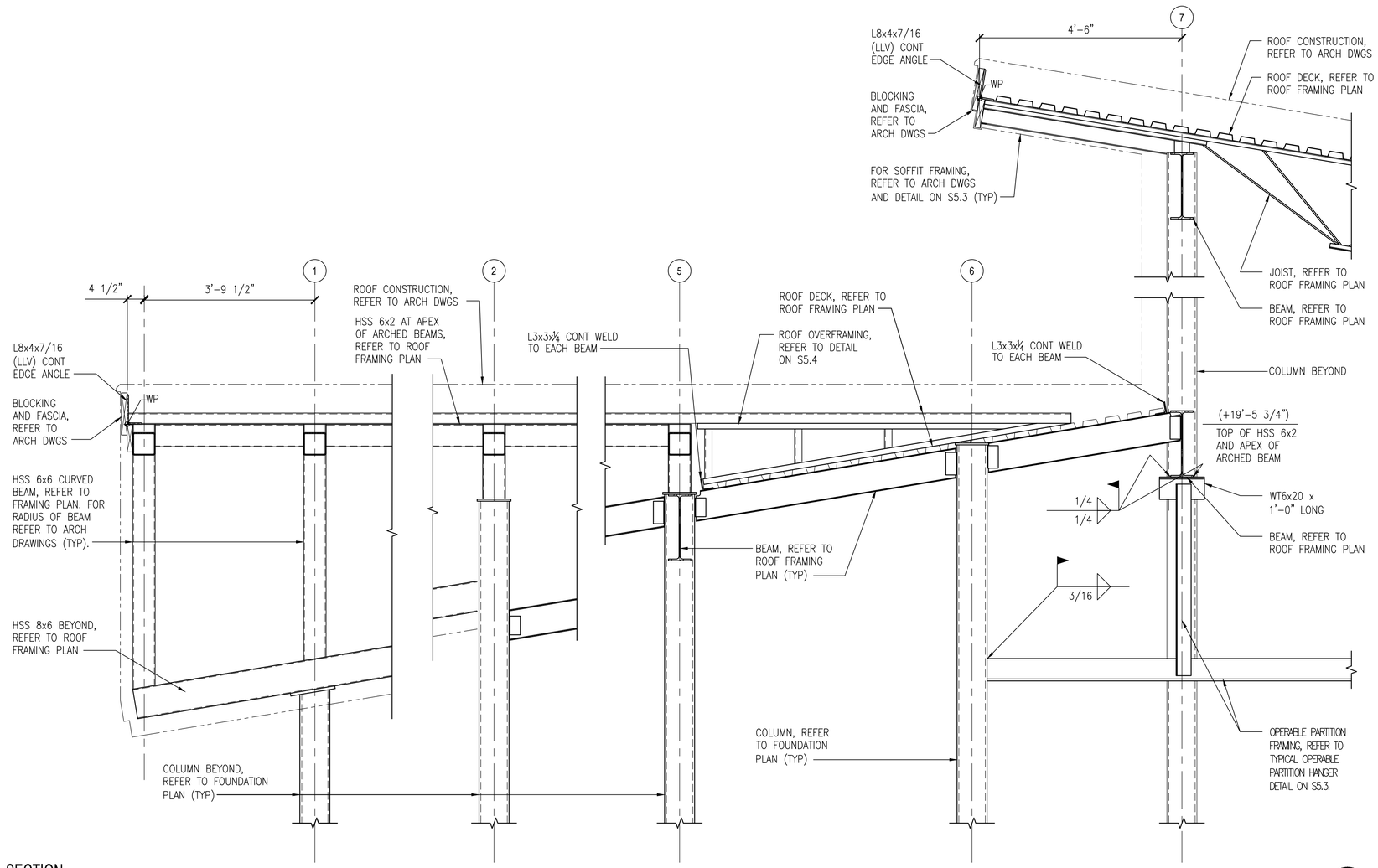

SECTION

SCALE: 3/4" = 1'-0"

D1

NRW ENGINEERING
Structural Consultants
748 Lord Dunmore Drive, Suite 101
Virginia Beach, VA 23464
Phone 757-474-0912
Fax 757-474-0919
NC license C-1393

MATERIALS KEYING LEGEND

GENERAL NOTES

KEY PLAN

SCO ID #23-26923-01A

NO	REVISION	DATE

SEAL

NORTH CAROLINA PROFESSIONAL 022530 ENGINEER KEVIN M. ROOMSBURG
10/15/2024

JKF ARCHITECTURE

625 LYNDALE CT., SUITE F, GREENVILLE, NC 27858 252-355-1068

CRAVEN COMMUNITY COLLEGE
CORPORATE TRAINING CENTER
NEW BERN, NC

DRAWING TITLE
SECTIONS

SCALE	3/4" = 1'-0"
DRAWN	JSS
CHECKED	KMR
DATE	9-1-2024
PROJECT NO.	2023-09
DRAWING NO	S3.4

© COPYRIGHT, JKF ARCHITECTURE PC, JOHN K. FARKAS, AIA

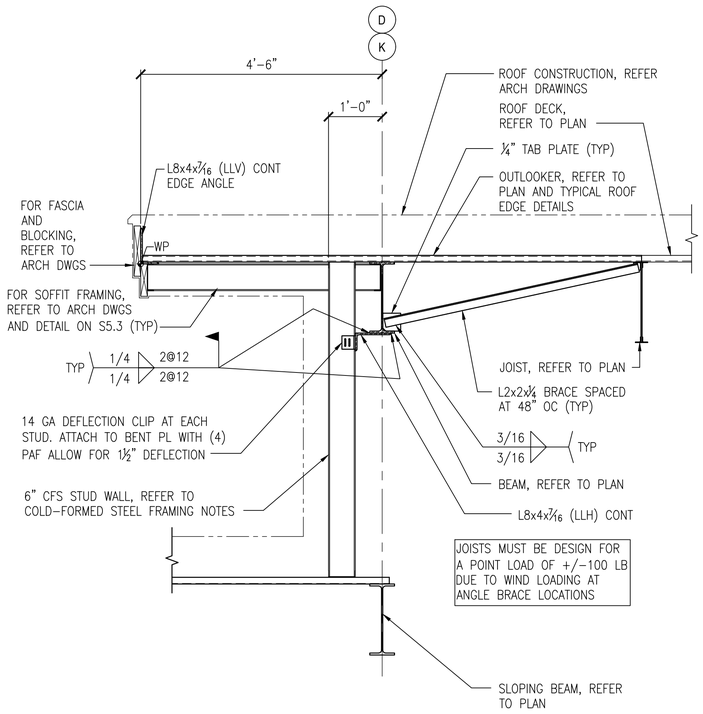

SECTION

SCALE: 3/4" = 1'-0"

G1

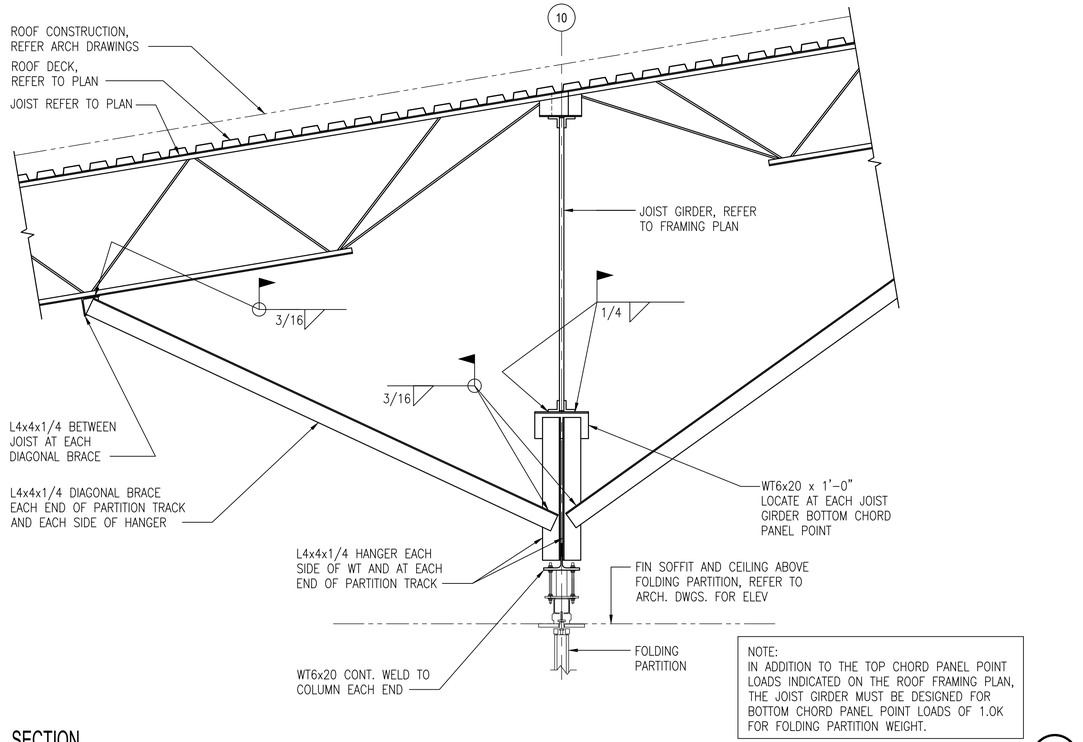

SECTION

SCALE: 3/4" = 1'-0"

G6

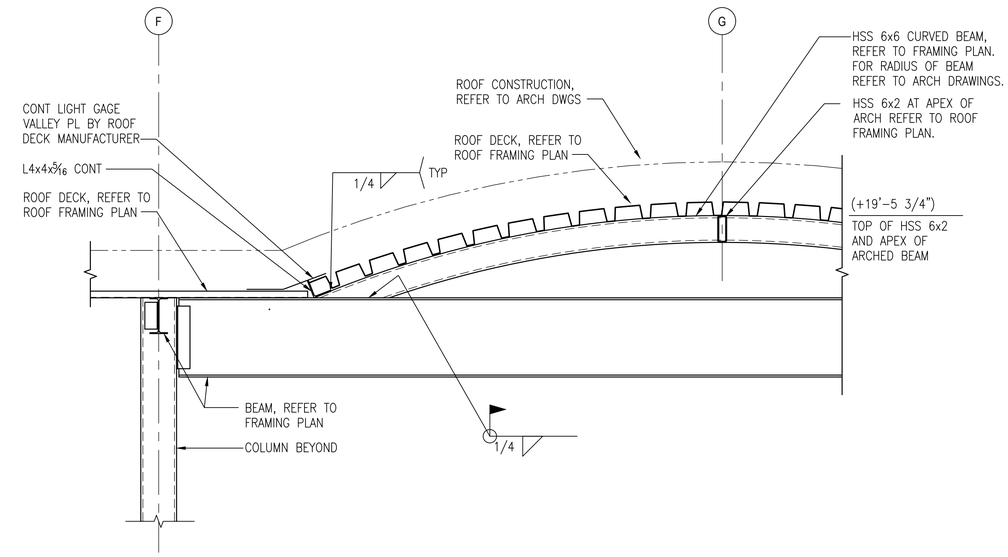

SECTION

SCALE: 3/4" = 1'-0"

A1

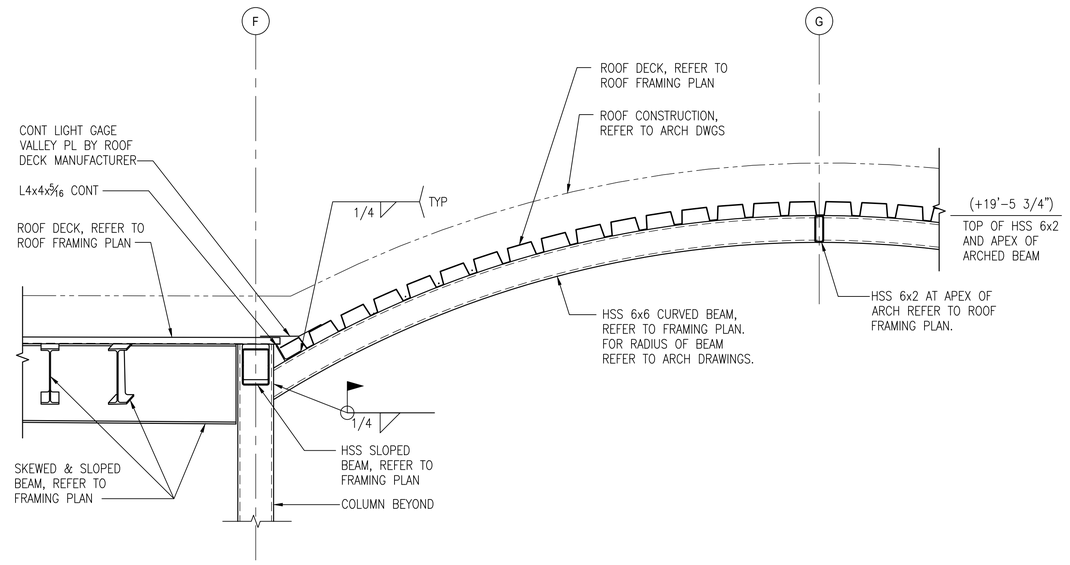

SECTION

SCALE: 3/4" = 1'-0"

A8

NRW ENGINEERING
Structural Consultants
748 Lord Dunmore Drive, Suite 101
Virginia Beach, VA 23464
Phone 757-474-0912
Fax 757-474-0919
NC license C-1393

MATERIALS KEYING LEGEND

GENERAL NOTES

KEY PLAN

SCO ID #23-26923-01A

NO	REVISION	DATE

SEAL

NORTH CAROLINA PROFESSIONAL 022530 ENGINEER KEVIN M. ROOMSBURG 10/15/2024

JKF ARCHITECTURE
625 LYNNDALE CT., SUITE F, GREENVILLE, NC 27858 252-355-1068

CRAVEN COMMUNITY COLLEGE
CORPORATE TRAINING CENTER
NEW BERN, NC

DRAWING TITLE

SECTIONS

SCALE	3/4" = 1'-0"
DRAWN	JSS
CHECKED	KMR
DATE	9-1-2024
PROJECT NO.	2023-09
DRAWING NO	S3.5

COPYRIGHT, JKF ARCHITECTURE PC, JOHN K. FARKAS, AIA

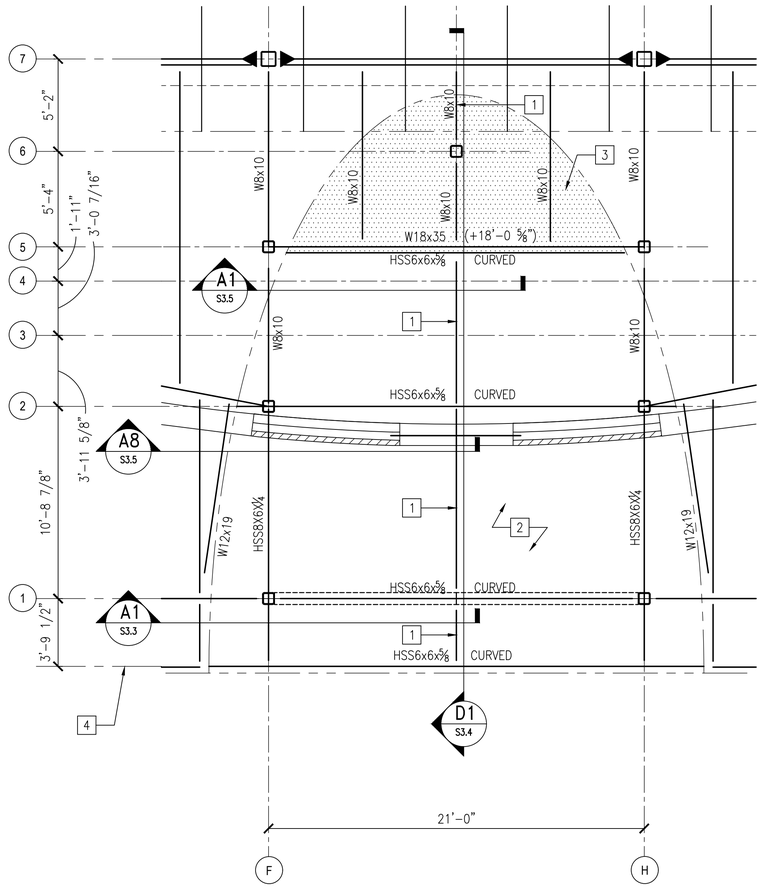

ENLARGED FRONT CANOPY ROOF FRAMING PLAN

SCALE: 1/4" = 1'-0"

E1

NRW ENGINEERING
Structural Consultants
748 Lord Dunmore Drive, Suite 101
Virginia Beach, VA 23464
Phone 757-474-0912
Fax 757-474-0919
NC license C-1393

PLAN NOTES:

1. DATUM FOR ALL ELEVATIONS GIVEN ON THIS PLAN IS FINISHED FIRST FLOOR ELEVATION = 0'-0". REFER TO CIVIL DRAWINGS FOR ACTUAL FINISHED FLOOR ELEVATION.
2. ROOF CONSTRUCTION IS 1½" DEEP, 20 GA. TYPE 'B' STEEL ROOF DECK SUPPORTED ON OPEN WEB JOIST ON STEEL BEAMS, U.O.N.
3. PROVIDE L4x4x5/16 ANGLE FRAMING EACH SIDE OF ROOF OPENING. FOR LOCATION AND DIMENSION OF ROOF OPENINGS REFER TO ARCHITECTURAL AND MECHANICAL DRAWINGS.
4. REFER TO FOUNDATION PLAN FOR COLUMN SIZES
5. BEAM TO MOMENT CONNECTIONS ARE INDICATED THUS: (▶——) ON PLAN. REFER TO TYPICAL MOMENT CONNECTION DETAILS FOR ADDITIONAL INFORMATION.
6. TOP OF STEEL BEAM ELEVATIONS INDICATED THUS (+____) UNLESS OTHERWISE NOTED IN SECTIONS. SLOPE BEAMS AS REQUIRED TO ACHIEVE ROOF SLOPE.
7. FOR TYPICAL DETAILS REFER TO SHEETS S5.1 THRU
8. FOR GENERAL NOTES REFER TO SHEETS S0.1. & S0.2.
9. JOIST EXTENDED ENDS MUST BE DESIGNED TO SAFELY SUPPORT AN UNIFORM LOAD OF 300 PLF OR 200 LB LOCATED AT THE END OF JOIST EXTENSION.
10. SLOPING JOISTS SHALL HAVE A JOIST SEAT OF 5½" MEASURED AT CL OF STEEL BEAM.

KEY NOTES:

1. HSS 6X2X¼ LOCATED AT APEX OF ARCHED BEAM.
2. 3" DEEP, 20 GAGE, TYPE N GALVANIZED METAL ROOF DECK SPANNING BETWEEN ARCHED BEAMS
3. ROOF OVER-FRAMING OVER STRUCTURE SHOWN AS THUS (▨). REFER TO TYPICAL BUILT-UP ROOF FRAMING DETAIL FOR FRAMING INFORMATION. REFER TO ARCHITECTURAL DRAWINGS FOR SLOPES AND ADDITIONAL INFORMATION.
4. CENTERLINE OF HSS CURVED MEMBER.

0 2' 4' 8'

SCALE: 1/4" = 1'-0"

N

MATERIALS KEYING LEGEND

GENERAL NOTES

KEY PLAN

SCO ID #23-26923-01A

NO	REVISION	DATE

SEAL

NORTH CAROLINA PROFESSIONAL ENGINEER SEAL 027250 10/15/2024 KEVIN M. ROOMSBURG

JKF ARCHITECTURE

625 LYNNDALE CT., SUITE F, GREENVILLE, NC 27858 252-355-1068

CRAVEN COMMUNITY COLLEGE
CORPORATE TRAINING CENTER
NEW BERN, NC

DRAWING TITLE
ENLARGED FRONT CANOPY ROOF FRAMING PLAN

SCALE	1/4" = 1'-0"
DRAWN	JSS
CHECKED	KMR
DATE	9-1-2024
PROJECT NO.	2023-09
DRAWING NO	S4.1

© COPYRIGHT, JKF ARCHITECTURE PC. JOHN K. FARKAS, AIA

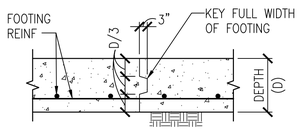

TYPICAL FOOTING CONSTRUCTION JOINT DETAIL

NOT TO SCALE

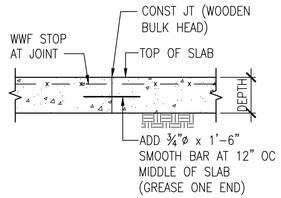

CONSTRUCTION JOINT

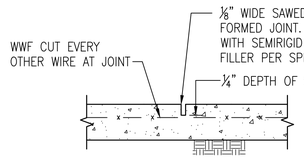

SAWED JOINT

TYPICAL SLAB CONTROL JOINT DETAILS

NOT TO SCALE

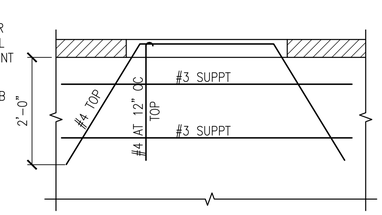

DETAIL AT EXTERIOR DOOR

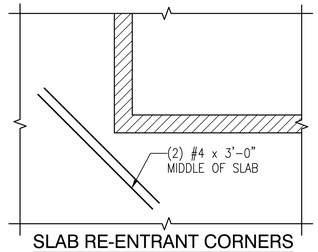

SLAB RE-ENTRANT CORNERS

TYPICAL DETAIL SHOWING SLAB REINFORCING AT EXTERIOR DOORS AND CORNERS

NOT TO SCALE

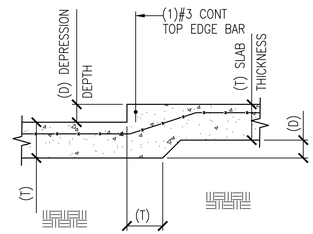

TYPICAL DEPRESSED SLAB DETAIL

NOT TO SCALE

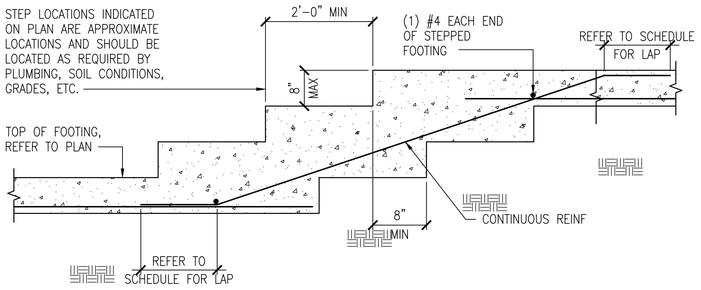

TYPICAL STEPPED FOOTING DETAIL

NOT TO SCALE

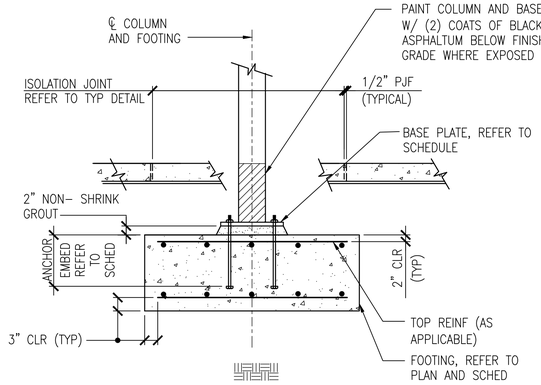

TYPICAL COLUMN AND FOOTING DETAIL

NOT TO SCALE

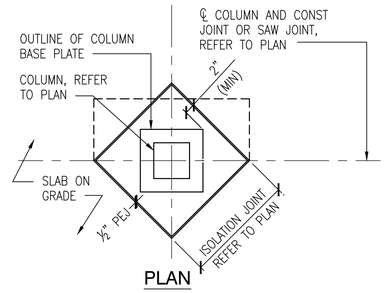

PLAN

TYPICAL ISOLATION JOINT DETAIL

NOT TO SCALE

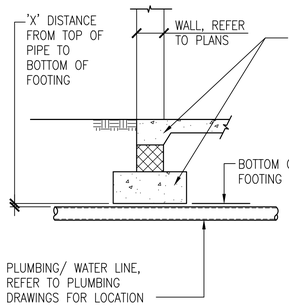

SECTION TYPICAL

NOT TO SCALE

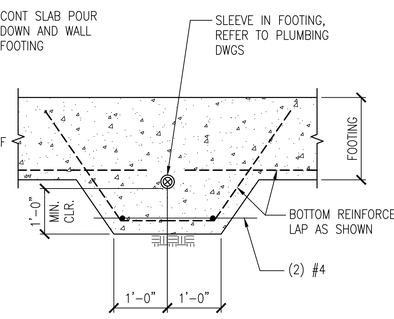

FOOTING ELEVATION WHERE `X' IS EQUAL TO OR LESS THAN 3 INCHES

NOT TO SCALE

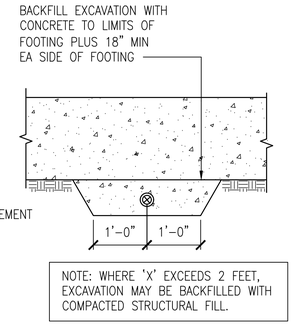

FOOTING ELEVATION WHERE `X' IS GREATER THAN 3 INCHES AND LESS THAN 2 FEET

NOT TO SCALE

TYPICAL DETAIL SHOWING PLUMBING LINE UNDER FOOTING

NOT TO SCALE

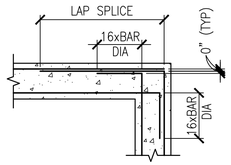

CORNER

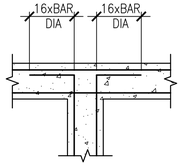

INTERSECTION

NOTE: WHERE THREE BARS OCCUR, CENTER BAR SHALL BE TREATED SAME AS INNER FACE BAR

TYPICAL DETAIL SHOWING CONTINUOUS REINFORCING AT CORNERS AND INTERSECTIONS

NOT TO SCALE

CONCRETE REINFORCEMENT LAP SPLICE SCHEDULE		
BAR SIZE	LAP LENGTH	
	TOP BARS	BOTTOM BARS
#4	33"	25"
#5	41"	31"
#6	49"	36"
#7	71"	54"
#8	81"	62"
#9	91"	70

NOTE: REFER TO MECHANICAL/CIVIL DRAWINGS FOR DIMENSIONS AND LOCATION OF CONCRETE PAD.

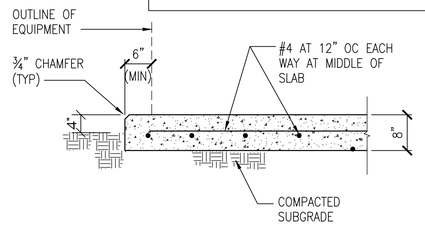

NOTE: GENERAL CONTRACTOR COORDINATE ANY REQUIRED ANCHORAGE EMBEDS NEEDED FOR THE EQUIPMENT PLACED ON THE PAD.

CHILLER / EQUIPMENT PAD ON GRADE DETAIL

NOT TO SCALE

NRW ENGINEERING
Structural Consultants
748 Lord Dunmore Drive, Suite 101
Virginia Beach, VA 23464
Phone 757-474-0912
Fax 757-474-0919
NC license C-1393

MATERIALS KEYING LEGEND

GENERAL NOTES

KEY PLAN

SCO ID #23-26923-01A

NO	REVISION	DATE

SEAL

NORTH CAROLINA PROFESSIONAL 022830 ENGINEER KEVIN M. ROOMSBURG 10/15/2024

JKF ARCHITECTURE
625 LYNNDALE CT., SUITE F, GREENVILLE, NC 27858 252-355-1068

CRAVEN COMMUNITY COLLEGE
CORPORATE TRAINING CENTER
NEW BERN, NC

DRAWING TITLE
TYPICAL DETAILS

SCALE	DRAWING NO
NONE	S5.1
DRAWN: JSS	
CHECKED: KMR	
DATE: 9-1-2024	
PROJECT NO.: 2023-09	

COPYRIGHT, JKF ARCHITECTURE PC, JOHN K. FARKAS, AIA

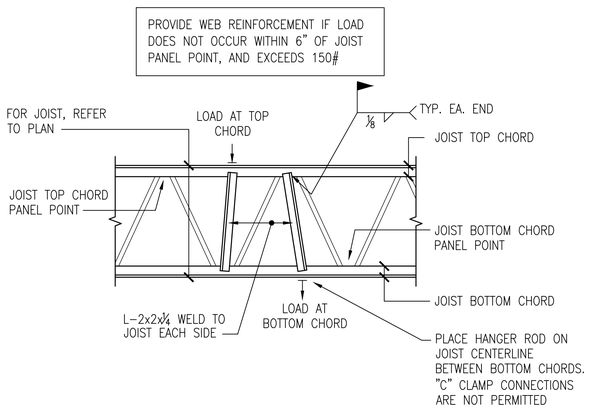

TYPICAL ADDED REINF. AT JOIST SUPPORTING LOADS BETWEEN PANEL POINTS

NOT TO SCALE

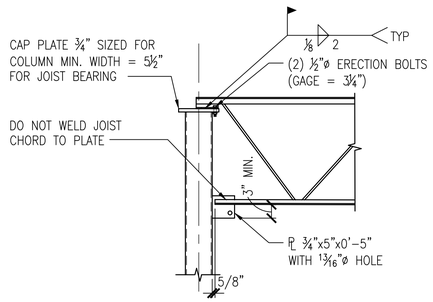

TYPICAL 'SP' JOIST TO COLUMN CONNECTION DETAIL

NOT TO SCALE

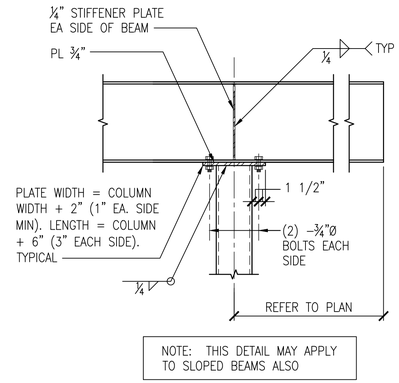

NOTE: THIS DETAIL MAY APPLY TO SLOPED BEAMS ALSO

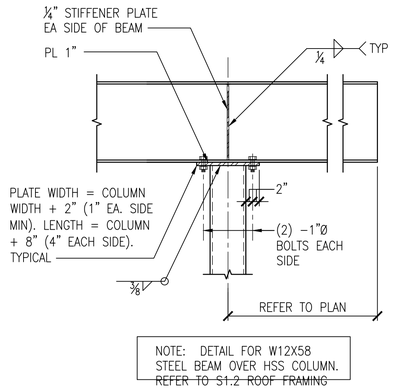

NOTE: DETAIL FOR W12X58 STEEL BEAM OVER HSS COLUMN. ~~REFER TO S1.2 ROOF FRAMING~~ KEY NOTE #7

TYPICAL BEAM BEARING ON COLUMN DETAIL

NOT TO SCALE

COLUMN SCHEDULE

MARK	SIZE	B	N	BASE PLATE TYPE	THICKNESS	ANCHOR ROD	EMBEDMENT
C1	HSS8x8x⅜	16"	16"	A	1"	(4) ¾" Ø	12"
C2	HSS8x8x⅜	16"	16"	B	1¼"	(8) 1" Ø	12"
C3	HSS8x8x⅜	18"	18"	C	1¾"	(8) 1¼" Ø	16"
C4	HSS10x10x½	20"	20"	D	1½"	(8) 1¼" Ø	16"
C5	HSS10x10x½	20"	20"	D	1¾"	(8) 1¼" Ø	16"
C6	HSS10x10x½	20"	20"	E	2"	(10) 1¼" Ø	20"
C7	HSS10x10x½	24"	24"	F	2⅜"	(10) 1¼" Ø	20"
C8	HSS10x10x½	18"	18"	A	1"	(4) ¾" Ø	12"

NOTE:
1. HEADED ANCHOR RODS SHALL BE ASTM F1554 GRADE 55 WITH HEAVY HEX NUTS.
2. ANCHOR WASHERS SHALL BE WELDED TO TOP OF STEEL COLUMN BASE PLATES.
3. DO NOT APPLY TORQUE TO THE ANCHORS DURING ANCHORS INSTALLATION.
4. OVERSIZE BASE PLATE HOLES WITH WASHERS AS FOLLOWS:

BOLTS	HOLE Ø	WASHER
¾"Ø	15/16"	¼"x2"Ø
1"Ø	1 1/16"	⅜"x3"Ø
1¼"Ø	2 1/16"	½"x3"Ø

COLUMN FOOTING SCHEDULE

MARK	DIMENSIONS WIDTH	DIMENSIONS LENGTH	DIMENSIONS DEPTH	REINFORCING SHORT WAY QUANTITY	REINFORCING SHORT WAY SIZE	REINFORCING LONG WAY QUANTITY	REINFORCING LONG WAY SIZE	REMARKS
F4.0	4'–0"	4'–0"	1'–4"	5	5	5	5	TOP AND BOTTOM
F6.0	6'–0"	6'–0"	1'–4"	7	5	7	5	TOP AND BOTTOM
F7.5	7'–6"	7'–6"	1'–4"	9	5	9	5	TOP AND BOTTOM
F8.5A	8'–6"	8'–6"	1'–4"	10	5	10	5	TOP AND BOTTOM
F8.5B	8'–6"	8'–6"	1'–8"	7	7	7	7	TOP AND BOTTOM
F9.5	9'–6"	9'–6"	1'–8"	7	7	7	7	TOP AND BOTTOM
F11.5	11'–6"	11'–6"	1'–8"	9	7	9	7	TOP AND BOTTOM
F12.5A	12'–6"	12'–6"	1'–4"	14	5	14	5	TOP AND BOTTOM
F12.5B	12'–6"	12'–6"	2'–4"	13	7	13	7	TOP AND BOTTOM
F14.0	14'–0"	14'–0"	3'–2"	20	7	20	7	TOP AND BOTTOM
F23.0	11'–6"	23'–0"	2'–0"	10	7	20	7	TOP AND BOTTOM
F27.0	13'–6"	27'–0"	2'–0"	12	7	24	7	TOP AND BOTTOM

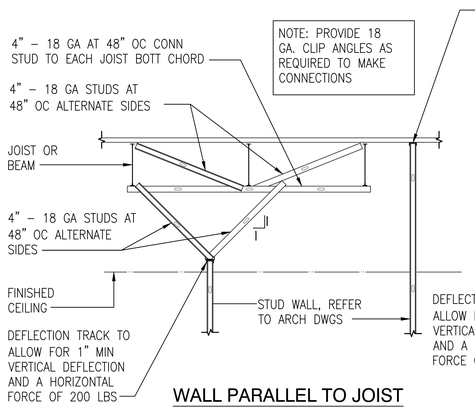

WALL PARALLEL TO JOIST

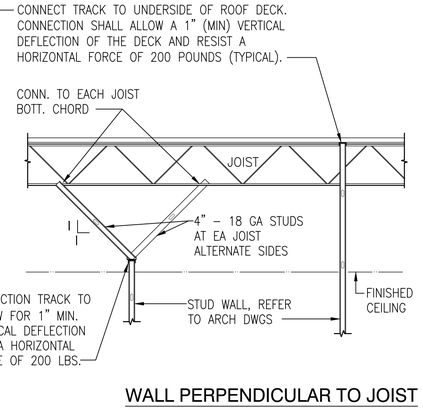

WALL PERPENDICULAR TO JOIST

TYPICAL METAL STUD WALL BRACING DETAILS

NOT TO SCALE

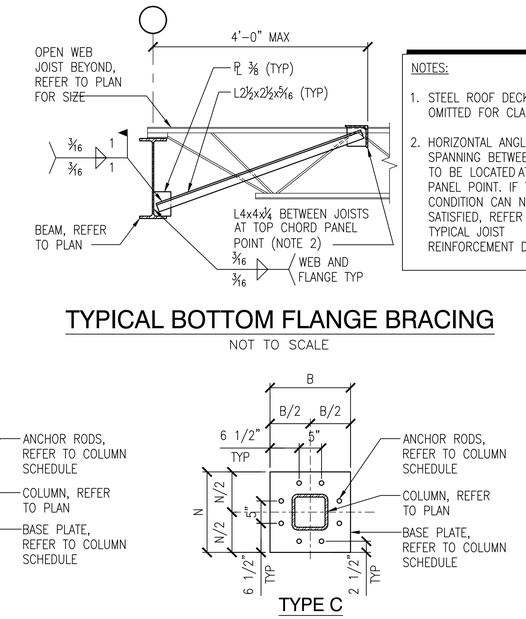

NOTES:

1. STEEL ROOF DECK IS OMITTED FOR CLARITY.
2. HORIZONTAL ANGLE SPANNING BETWEEN JOISTS TO BE LOCATED AT A PANEL POINT. IF THIS CONDITION CAN NOT BE SATISFIED, REFER TO TYPICAL JOIST REINFORCEMENT DETAIL.

TYPICAL BOTTOM FLANGE BRACING

NOT TO SCALE

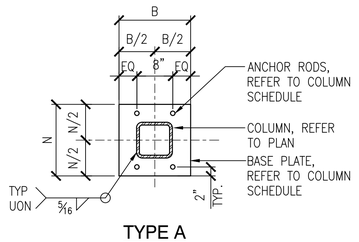

TYPE A

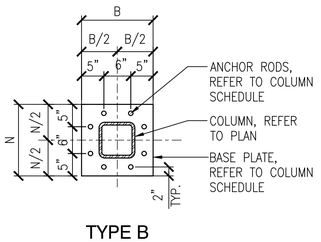

TYPE B

TYPE C

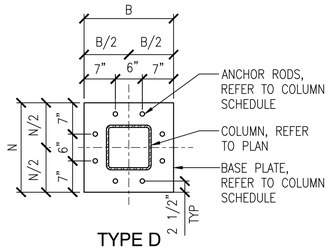

TYPE D

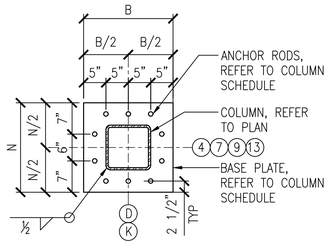

TYPE E

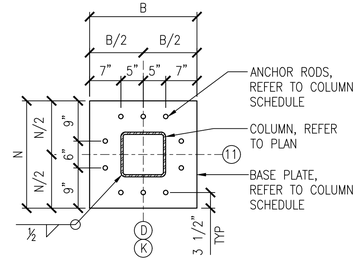

TYPE F

TYPICAL BASE PLATE DETAILS

NOT TO SCALE

NRW ENGINEERING
Structural Consultants
748 Lord Dunmore Drive, Suite 101
Virginia Beach, VA 23464
Phone 757-474-0912
Fax 757-474-0919
NC license C-1393

MATERIALS KEYING LEGEND

GENERAL NOTES

KEY PLAN

SCO ID #23-26923-01A

NO	REVISION	DATE

SEAL

NORTH CAROLINA PROFESSIONAL ENGINEER KEVIN M. ROONGRUNG 022530 10/15/2024

JKF ARCHITECTURE
625 LYNNDALE CT., SUITE F, GREENVILLE, NC 27858 252-355-1068

CRAVEN COMMUNITY COLLEGE
CORPORATE TRAINING CENTER
NEW BERN, NC

DRAWING TITLE: TYPICAL DETAILS

SCALE	DRAWING NO
NONE	S5.2
DRAWN: JSS	
CHECKED: KMR	
DATE: 9-1-2024	
PROJECT NO.: 2023-09	

© COPYRIGHT, JKF ARCHITECTURE PC, JOHN K. FARKAS, AIA

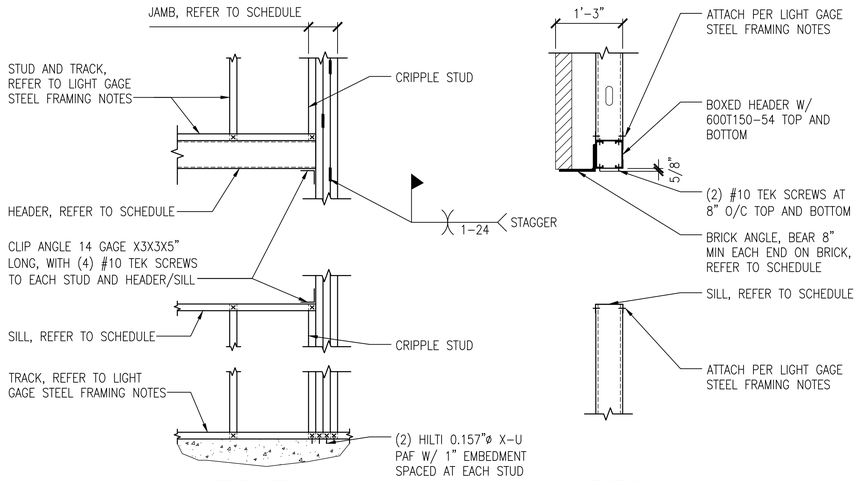

ELEVATION SECTION

SCHEDULE		
MEMBER	CLEAR OPENING	
	0 TO 4'-0"	4'-1" TO 6'-8"
BOXED HEADER	600S162-54	600S162-54
SILL	600T150-54	600T150-68
JAMB	(2) 600S200-68	(3) 600S200-68
BRICK ANGLE	L7X4X3/8 (LLH)	L7X4X3/8 (LLH)

TYPICAL CFS DETAILS AT EXTERIOR WALL OPENINGS

NOT TO SCALE

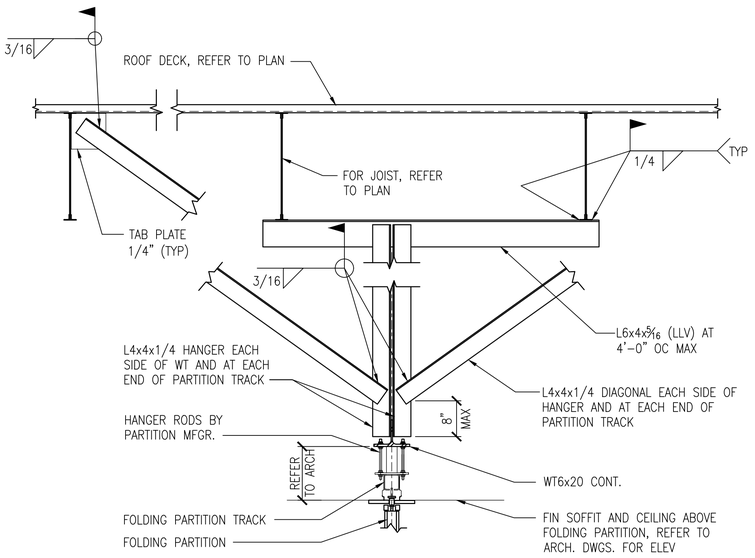

TYPICAL OPERABLE PARTITION HANGER DETAIL

NOT TO SCALE

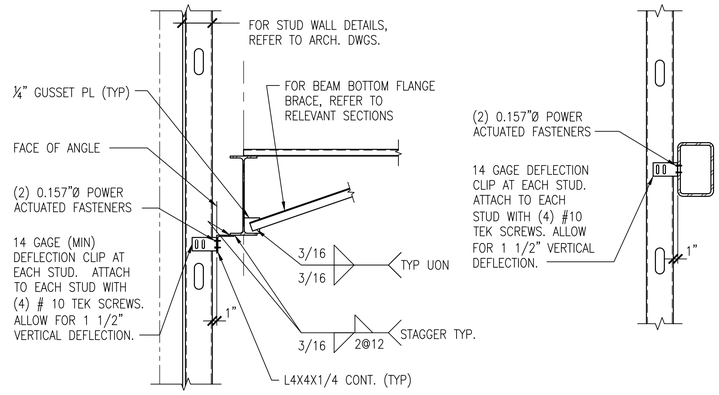

BOTTOM FLANGE CONNECTION WIND GIRT CONNECTION

TYPICAL EXTERIOR LIGHT GAGE STUD BRACING DETAILS

NOT TO SCALE

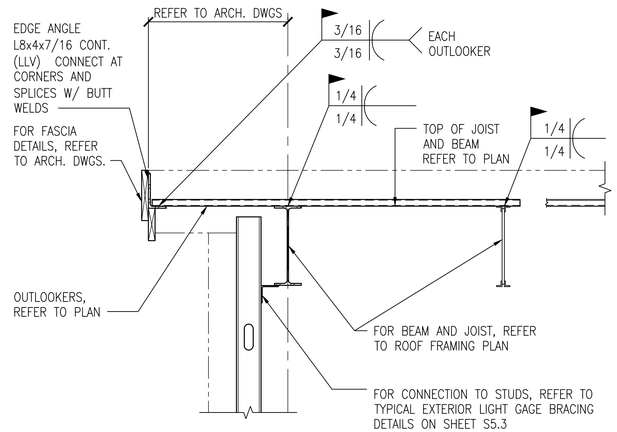

CONDITION AT GABLE ENDS WITH OUTLOOKER

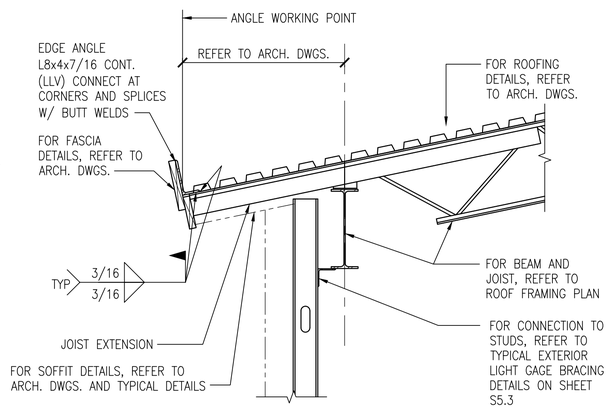

CONDITION AT JOIST EXTENDED ENDS

TYPICAL ROOF EDGE DETAILS

NOT TO SCALE

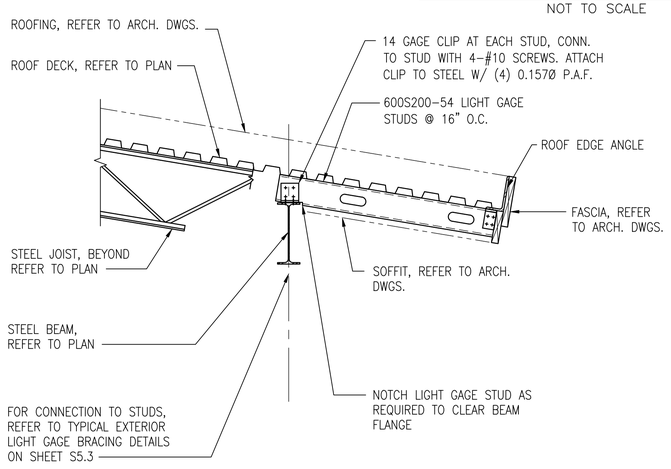

TYPICAL ROOF OVERHANG SOFFIT FRAMING AT LOW AND HIGH END DETAIL

NOT TO SCALE

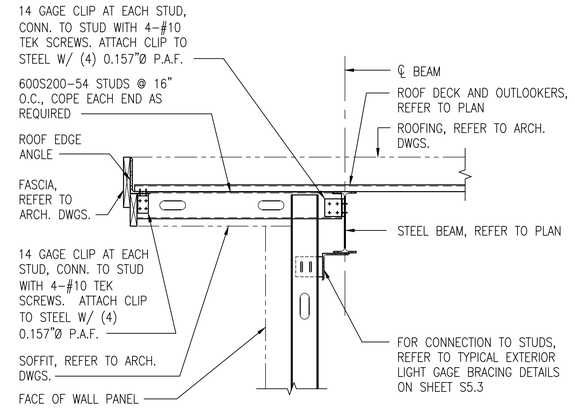

TYPICAL ROOF OVERHANG SOFFIT FRAMING AT OUTLOOKERS DETAIL

NOT TO SCALE

NRW ENGINEERING
Structural Consultants
748 Lord Dunmore Drive, Suite 101
Virginia Beach, VA 23464
Phone 757-474-0912
Fax 757-474-0919
NC license C-1393

MATERIALS KEYING LEGEND

GENERAL NOTES

KEY PLAN

SCO ID #23-26923-01A

NO	REVISION	DATE

SEAL: NORTH CAROLINA PROFESSIONAL ENGINEER SEAL 022830 10/15/2024 KEVIN M. ROOMSBURG

JKF ARCHITECTURE
625 LYNNDALE CT., SUITE F, GREENVILLE, NC 27858 252-355-1068

CRAVEN COMMUNITY COLLEGE CORPORATE TRAINING CENTER
NEW BERN, NC

DRAWING TITLE: TYPICAL DETAILS

SCALE	NONE
DRAWN	JSS
CHECKED	KMR
DATE	9-1-2024
PROJECT NO.	2023-09
DRAWING NO	S5.3

COPYRIGHT. JKF ARCHITECTURE PC. JOHN K. FARKAS, AIA

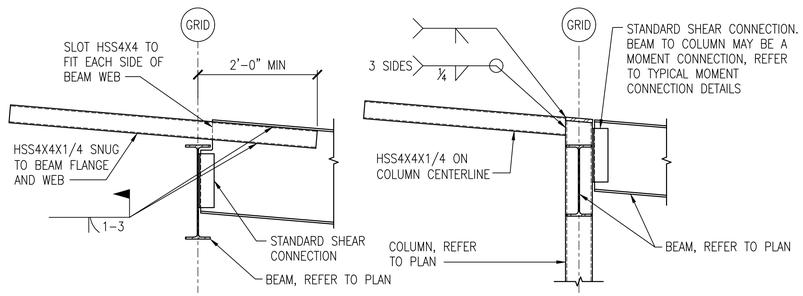

AT BEAM

AT COLUMN

TYPICAL BEAM EXTENSION DETAILS

NOT TO SCALE

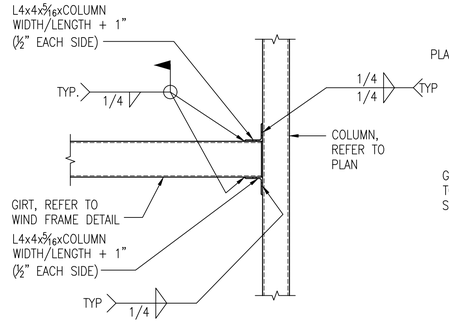

TYPICAL GIRT TO COLUMN CONNECTION

NOT TO SCALE

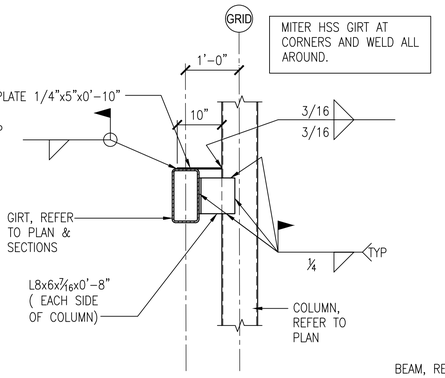

OFFSET GIRT TO COLUMN CONNECTION DETAIL

NOT TO SCALE

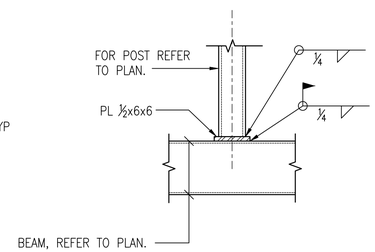

POST TO BEAM CONNECTION DETAIL

NOT TO SCALE

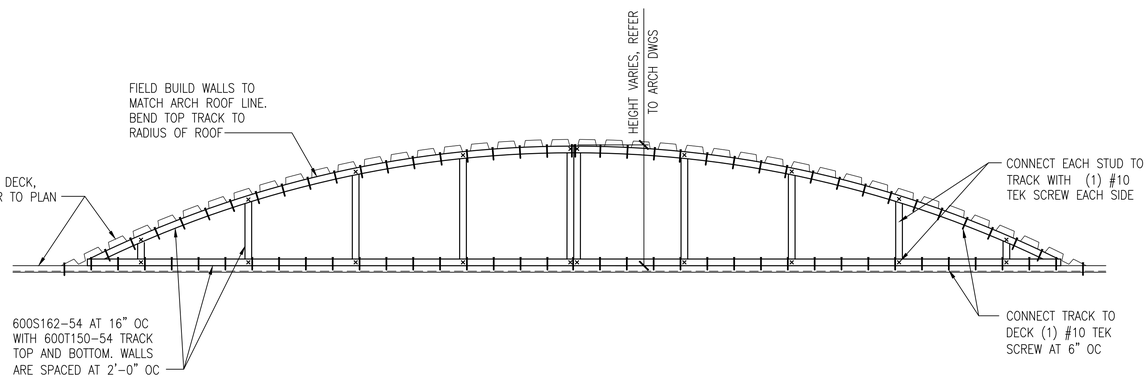

TYPICAL ROOF OVER-FRAMING DETAIL

NOT TO SCALE

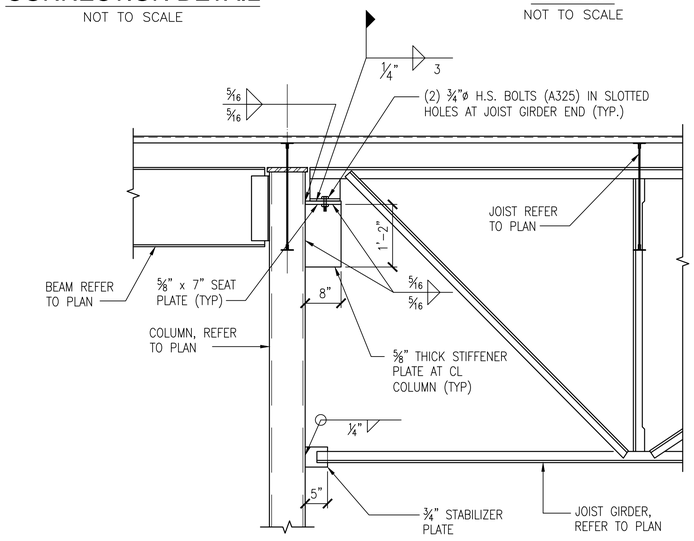

TYPICAL JOIST GIRDER TO COLUMN DETAIL

NOT TO SCALE

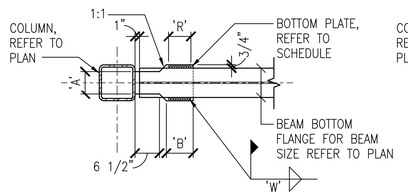

A PLATE DETAIL - BOTTOM PLATE

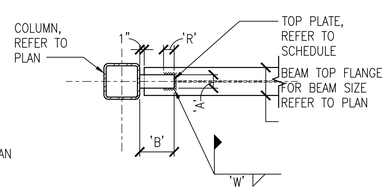

B PLATE DETAIL - TOP PLATE

BOTTOM PLATE DIMENSIONS (INCH)					
BEAM	'A'	'B'	THICKNESS	WELDS	
				'R'	'W'
W21x44	5	7	5/16"	6	¼
W21x48	6	7	⅜"	6	¼
W24x55	6	7	⅜"	6	5/16

TOP PLATE DIMENSIONS (INCH)					
BEAM	'A'	'B'	THICKNESS	WELDS	
				'R'	'W'
W21x44	5	13	5/16"	3	¼
W21x48	6	13	3/8"	3	¼
W24x55	6	13	3/8"	3	5/16

TYPICAL MOMENT CONNECTION DETAILS

NOT TO SCALE

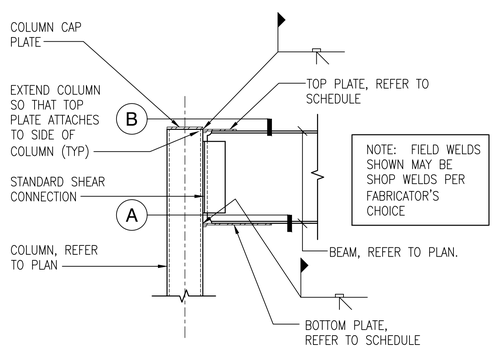

ELEVATION AT HORIZONTAL BEAM

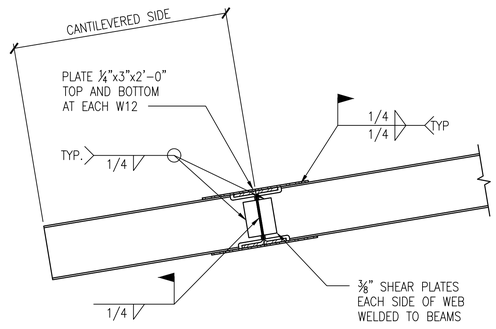

OUTLOOKER MOMENT CONNECTION DETAIL

NOT TO SCALE

NRW ENGINEERING
Structural Consultants
748 Lord Dunmore Drive, Suite 101
Virginia Beach, VA 23464
Phone 757-474-0912
Fax 757-474-0919
NC license C-1393

MATERIALS KEYING LEGEND

GENERAL NOTES

KEY PLAN

SCO ID #23-26923-01A

NO	REVISION	DATE

SEAL

NORTH CAROLINA PROFESSIONAL 022830 10/15/2024 ENGINEER KEVIN M. ROOMSBURG

JKF ARCHITECTURE
625 LYNNDALE CT., SUITE F, GREENVILLE, NC 27858 252-355-1068

CRAVEN COMMUNITY COLLEGE
CORPORATE TRAINING CENTER
NEW BERN, NC

DRAWING TITLE: TYPICAL DETAILS

SCALE	NONE
DRAWN	JSS
CHECKED	KMR
DATE	9-1-2024
PROJECT NO.	2023-09

DRAWING NO: S5.4

COPYRIGHT, JKF ARCHITECTURE PC, JOHN K. FARKAS, AIA

SPRINKLER DESIGN DATA

PROJECT NAME:	CRAVEN COMMUNITY COLLEGE CORPORATE TRAINING CENTER FEASIBILITY STUDY			SYSTEM:	WET
PROJECT STREET ADDRESS:	NEW BERN, NC			SYSTEM SQ. FT.:	12,296
SUITE:		FLOOR#	1	CEILING HEIGHT:	VARIES
DESIGNED BY:	ATLANTEC ENGINEERS	PHONE	919-571-1111	TOTAL BLDG. HGT:	30'-0"
		HAZARD	LIGHT HAZARD		

DESIGN SUMMARY

	SYSTEM #1	SYSTEM #2	SYSTEM #	SYSTEM #	SYSTEM #
DESIGN METHOD	CALC'D	CALC'D			
SYSTEM I.D. #					
LOCATION	1ST FLOOR	MECHANICAL ROOM 120			
TYPE OF SYS.	WET	WET			
HAZARD CLASS	LIGHT	ORDINARY GROUP 1			
CRITERIA FROM	NFPA 13 – 2013	NFPA 13 – 2013			
DESIGN AREA	1013 SQFT	90 SQFT			
SPACING	225 SQFT	130 SQFT			
DENSITY	0.1	0.15			
K-FACTOR	5.6	5.6			
HOSE ALLOWANCE	100	250			
#SPRINKLERS DESIGN					
REQUIREMENTS@					
G.P.M REQ'D.					
P.S.I. REQ'D.					
NODE #					
SAFETY FACTOR					
G.P.M.					
P.S.I.					

WATER SUPPLY INFORMATION

TESTED BY	IMPACT FIRE		DATE/TIME	04/04/24	8:30 AM	PRESSURE HYDRANT			
HYDRANT ELEVATION	~33'		FLOW HYDRANT			STATIC			
STATIC	48 PSI		RESIDUAL	40 PSI		FLOW	648 GPM		

COPY OF WATER TEST DATA INCLUDED W/CALCS ARE REQUIRED

FIRE PUMP DATA

RATED G.P.M.	N/A	RATED PRESSURE	N/A	DIESEL Hp.	N/A		
ELECTRIC VOLTS	N/A	BOOST PRESSURE	N/A	DISCHARGE FLOW	N/A		
RESIDUAL(PSI)	N/A	FLOW (GPM)	N/A	COMBINED GPM	N/A		
COMBINED STATIC	N/A	COMBINED RESIDUAL	N/A	SUCTION NODE	N/A	DISCHARGE NODE	N/A

IF STORAGE IS GREATER THAN 12' COMPLETE COMMODITY STORAGE DESIGN INFO.

COMMODITY DESCRIPTION	N/A	STORAGE TYPE(RACK, BIN)			N/A
COMMODITY CLASS	N/A	STORAGE HEIGHT	N/A	CLEARANCE	N/A
STABLE/UNSTABLE	N/A	OPEN/CLOSE ARRAY	N/A	WET/DRY SYSTEM	N/A

FIGURE#	CURVE#	AREA	DENSITY	HEIGHT FACTOR	CLEAR FACTOR	ARRAY FACTOR	DRY PENALTY	DESIGN	MINIMUM DESIGN	FINAL DESIGN
N/A	N/A	N/A	N/A	N/A	N/A	N/A	N/A	N/A	N/A	N/A
INITIAL										
SECOND-ARY										

NOTE:
NO STORAGE ABOVE 12' FOR CLASS III COMMODITIES, NO MORE THAN 10' FOR CLASS IV COMMODITIES AND NO MORE THAN 5' FOR GROUP A PLASTICS IN LOW PILED STORAGE IN ACCORDANCE WITH NFPA 13 SECTION 4.3.1.7.1

9/5/2024

Flow Test	Average
Static	49
Residual	40
Flow	648
Height	4

1220 gpm availalbe at 20 psi per flow test

First Floor FFE	18
2nd Floror FFE	0
Ridge	0
Flow test	0
Backflow	10
End Head	7
Elevation	7.792208

24.79221 Pressure required no pipe

	Design	Area	Straight	with 50% Hose	required flow
Flow	0.1	1013	101.3	151.95	100 251.95

At 252 gpm you have 47 psi available no safety margin reduction.
With 20% GM you have 14 psi for pipe losses.

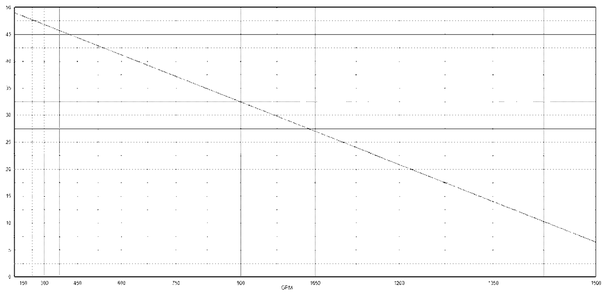

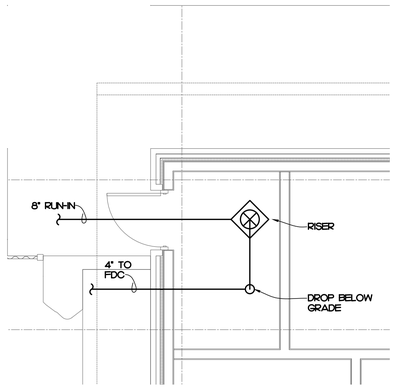

NOTE:
- PROVIDE 36" CLEARANCE IN FRONT OF RISER AND 12" ON EACH SIDE AND REAR OF RISER.

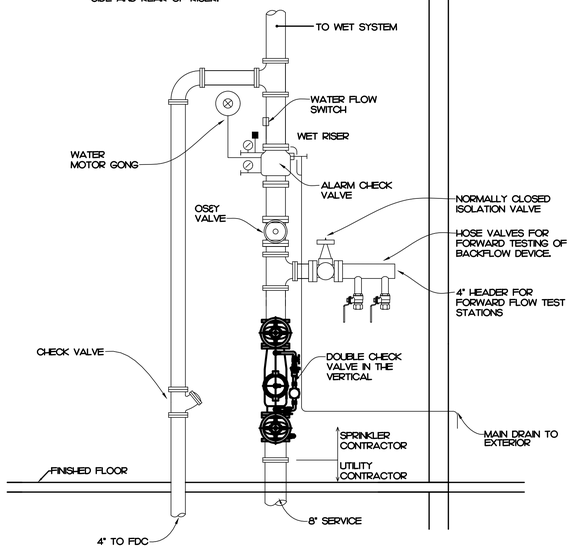

RISER ROOM LAYOUT/DETAIL (E14)

NOT TO SCALE

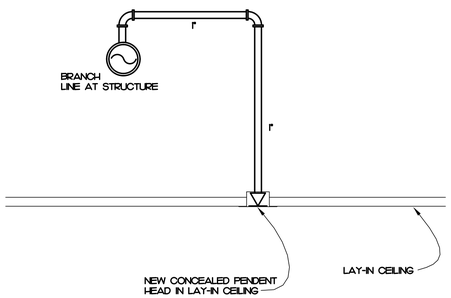

ARM OVER DETAIL (A4)

SCALE: NOT TO SCALE

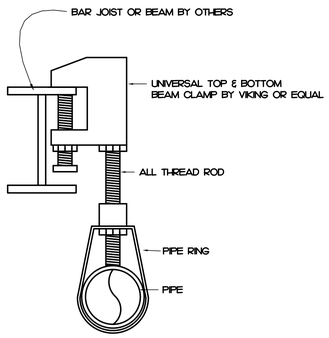

HANGAR DETAIL (A8)

SCALE: NOT TO SCALE

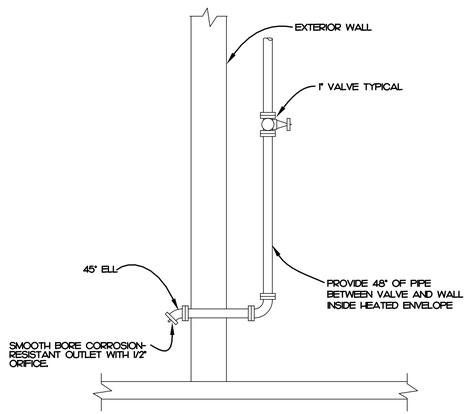

INSPECTOR'S TEST DETAIL (A14)

SCALE: NOT TO SCALE

GENERAL NOTES

1. THE SPRINKLER CONTRACTOR SHALL COORDINATE HIS WORK WITH OTHER TRADES PRIOR TO INSTALLATION. (LIGHTS, PIPES, ETC.).
2. THE SPRINKLER CONTRACTOR SHALL COORDINATE SHUT-OFF TIMES WITH OWNER.
3. ALL WORK SHALL BE DONE IN ACCORDANCE WITH ALL NFPA CODES, 13 & 72.
4. THE SPRINKLER CONTRACTOR SHALL BE A LICENSED SPRINKLER CONTRACTOR.
5. WIRING FROM ALL TAMPER SWITCHES AND FLOW SWITCHES TO FIRE ALARM PANEL SHALL BE BY THE ELECTRICAL CONTRACTOR.
6. ALL CUTTING AND PATCHING SHALL BE DONE BY THE GENERAL CONTRACTOR UNLESS NOTED OTHERWISE.
7. ALL PIPE UP TO 2" SHALL BE SCHEDULE 40 BLACK STEEL WITH THREADED FITTING. PIPING 2 1/2" AND LARGER SHALL BE SCHEDULE 10 BLACK STEEL WITH ROLLED GROOVE FITTING.
8. ALL HEADS ARE TO BE CENTERED IN TILES UNLESS OTHERWISE NOTED.
9. TESTING SHALL BE THE RESPONSIBILITY OF THE INSTALLING CONTRACTOR. PRESSURE TEST SHALL BE STATIC WATER AT TEST PRESSURE OF 200 PSIG FOR 2 HOURS DURATION WITHOUT LEAK FROM ANY JOINT OR SEGMENT OF THE PIPING SYSTEM FROM ANY EQUIPMENT OR DEVICE.
10. THE INSTALLING CONTRACTOR SHALL BE RESPONSIBLE FOR ANY DAMAGE TO THE WORK OF OTHER, TO BUILDING AND PROPERTY / MATERIALS OF OTHERS CAUSED BY LEAKS IN SPRINKLER EQUIPMENT, UNPLUGGED OR DISCONNECTED PIPES FOR FITTINGS, AND SHALL PAY FOR NECESSARY REPLACEMENT OR REPAIR OF WORK OR ITEMS SO DAMAGED DURING THE INSTALLATION AND TESTING PERIODS OF THE STANDPIPE WORK.
11. TESTS PER SECTION 14 OF NFPA 13 TO BE WITNESSED BY THE OWNERS INSURANCE UNDERWRITER(S). THE INSTALLING CONTRACTOR AND THE ARCHITECT / ENGINEER FIELD INSPECTOR - REPRESENTATIVE. SPRINKLER CONTRACTOR TO SUBMIT 3 COPIES OF NFPA 13-1990 "CONTRACTORS MATERIAL AND TEST CERTIFICATES".
12. FLUSH, TEST, AND INSPECT SPRINKLER PIPING SYSTEMS IN ACCORDANCE WITH NFPA 13.
13. REPLACE PIPING SYSTEM COMPONENTS WHICH DO NOT PASS THE TEST PROCEDURES SPECIFIED, AND RETEST REPAIRED PORTION OF THE SYSTEM. THE CONTRACTOR SHALL PROVIDE A UNIT COST TO ADD ADDITIONAL HEADS REQUIRED IN THE FIELD.
14. THE CONTRACTOR SHALL INCLUDE COST IN CONTRACT TO ADD HEADS REQUIRED IN THE FIELD.
15. THE G.C. TO PAINT EXPOSED PIPING, COORDINATE ROUTING OF PIPING WITH G.C.

DESIGN SUMMARY

THE FIRE SPRINKLER CONTRACTOR (FSC) SHALL PROVIDE A COMPLETE DESIGN IN ACCORDANCE WITH NFPA 13 FOR LIGHT HAZARD COVERAGE. THE DESIGN SHALL BE A HYDRAULIC CALCULATION METHOD GENERATED BY A FIRE SPRINKLER COMPUTER PROGRAM. THE DESIGN SHALL BE PREFORMED BY A NICET LEVEL III TECHNICIAN OR A PROFESSIONAL ENGINEER EXPERIENCED IN FIRE SPRINKLER DESIGN. ALL DRAWINGS AND CALCULATIONS SHALL BE SUBMITTED ALONG WITH THE SPRINKLER EQUIPMENT AND MATERIALS TO THE PROJECT ENGINEER OF RECORD FOR REVIEW.

THE FOLLOWING SPECIFIC REQUIREMENTS SHALL BE INCORPORATED INTO THE DESIGN OF THE SYSTEM:

1. FIRE MAIN FROM THE TAP AT THE UTILITY SYSTEM WATER MAIN INTO THE BUILDING TO ONE FOOT ABOVE FINISHED FLOOR AT THE DESIGNATED RISER LOCATION SHALL BE INSTALLED BY THE SITE UTILITY CONTRACTOR.
2. SPRINKLER HEADS SHALL BE CENTERED IN ALL LAY-IN CEILING TILES.
3. SPRINKLER HEADS IN LAY-IN AND SHEET ROCK CEILINGS SHALL BE CONCEALED TYPE. COORDINATE COLOR OF COVER PLATE WITH ARCHITECT TO MATCH SURROUNDING COLOR OF CEILING.
4. FIRE DEPARTMENT CONNECTION TO BE LOCATED ON BUILDING. COORDINATE EXACT LOCATION WITH LOCAL FIRE DEPARTMENT.
5. FLOW TEST FOR PRICING IS AS FOLLOWS. CONTRACTOR SHALL PROVIDE NEW FLOW TEST FOR DESIGN. PER SCO GUIDELINES REDUCE STATIC AND RESIDUAL PRESSURE BY 10% AND FLOW BY 10% FOR DESIGN OF SPRINKLER SYSTEM.
6. SEE ARCHITECTURAL, SITE, STRUCTURAL, MECHANICAL, ELECTRICAL AND PLUMBING PLANS FOR ALL SECTIONS, ELEVATIONS AND OTHER TRADES FOR COORDINATION. IT IS THE SPRINKLER CONTRACTOR'S RESPONSIBILITY TO COORDINATE PIPE ROUTING AND HEAD PLACEMENT WITH OTHER TRADES. COSTS ASSOCIATED WITH CONFLICTS WILL BE THE CONTRACTORS RESPONSIBILITY.

FLOW TEST:

STATIC: 48 PSI
RESIDUAL: 40 PSI
FLOW: 648 GPM

TEST DATE: 04/04/2024

COORDINATION DRAWINGS

THE GENERAL CONTRACTOR SHALL BE RESPONSIBLE FOR PROVIDING COORDINATION DRAWINGS TO IDENTIFY AND RESOLVE INSTALLATION OF ALL PIPE, DUCT, EQUIPMENT, CONDUIT, HANGERS, ETC. NECESSARY FOR COMPLETE AND OPERATIONAL PLUMBING, MECHANICAL, FIRE PROTECTION, ELECTRICAL, AND FIRE ALARM SYSTEMS SHOWN ON THESE DRAWINGS. CONTRACTOR SHALL INCLUDE WEEKLY MEETING TO FACILITATE THE PRODUCTION OF COORDINATION DRAWINGS. IT SHALL BE THE GENERAL CONTRACTOR'S RESPONSIBILITY THAT ALL TRADES PARTICIPATE IN PREPARATION OF COORDINATION DRAWINGS AND THE INSTALLATION OF WORK IN ACCORDANCE WITH DRAWINGS. SEE SPECIFICATION SECTION 013100.

FIRE FLOW ANALYSIS

PER 2018 NC FIRE CODE APPENDIX B:

BUILDING AREA 12,296 SQFT

TYPE II-B CONSTRUCTION

PER TABLE B105.1(2) THE FIRE FLOW REQUIRED IS 2500 GPM REDUCED TO 25% OF THIS PER TABLE B105.2 SINCE THE BUILDING IS PROTECTED BY NFPA 13 SYSTEM. FIRE FLOW REQUIRED IS 1000 GPM. FLOW TEST PROVIDED SHOWS STATIC PRESSURE OF 48 PSI, RESIDUAL PRESSURE OF 40 PSI FLOWING 648 GPM. THIS YIELDS A FLOW IN EXCESS OF 1250 GPM AT 20 PSI.

SYMBOL LEGEND

◈	SPRINKLER RISER
⊘	NEW CONCEALED PENDENT HEAD, 1/2" ORIFICE, K-5.6, 155°F. TYCO TY3231, OR EQUAL.

ATLANTEC ENGINEERS, PA 29052
now IMEG
3221 BLUE RIDGE ROAD, SUITE 113
RALEIGH, NC 27612
PH: (919) 571-1111

SEAL: NORTH CAROLINA PROFESSIONAL CORPORATION — IMEG CONSULTANTS CORP. No. F-1507

SEAL: NORTH CAROLINA PROFESSIONAL — SEAL 025036 — ENGINEER — BRADLEY W. FELTS — 10/15/24

GENERAL NOTES

KEY PLAN

SCO ID #23-26923-01A

NO	REVISION	DATE

JKF ARCHITECTURE
625 LYNNDALE CT., SUITE F, GREENVILLE, NC 27858 252-355-1068

CRAVEN COMMUNITY COLLEGE CORPORATE TRAINING CENTER
NEW BERN, NC

DRAWING TITLE
FIRE PROTECTION LEGENDS AND GENERAL NOTES

SCALE	1/8" = 1'-0"
DRAWN	JAD
CHECKED	BWF
DATE	9-1-2024
PROJECT NO.	2023-09
DRAWING NO	FP0.0

© COPYRIGHT, JKF ARCHITECTURE PC., JOHN K. FARKAS, AIA

230262

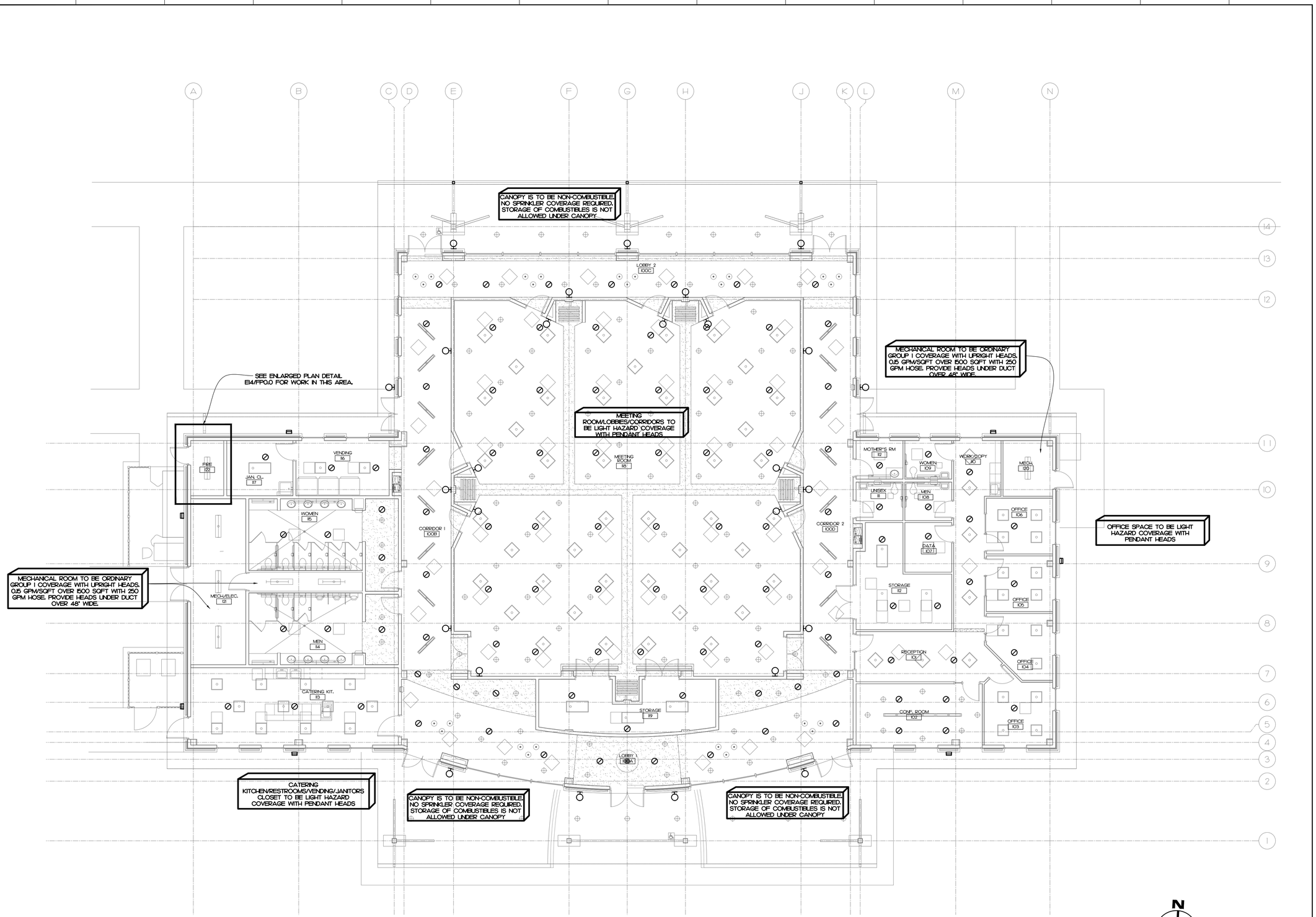

FIRE PROTECTION PLAN

SCALE: 1/8" = 1'-0" A4

23052

ATLANTEC ENGINEERS, PA 23052
now IMEG
3221 BLUE RIDGE ROAD, SUITE 113
RALEIGH, NC 27612
PH: (919) 571-1111

SEAL: NORTH CAROLINA PROFESSIONAL CORPORATION — IMEG CONSULTANTS CORP. No. F-1507

SEAL: NORTH CAROLINA PROFESSIONAL — SEAL 025036 — ENGINEER — BRADLEY W. FELTS — 10/15/24

GENERAL NOTES

KEY PLAN

SCO ID #23-26923-01A

NO	REVISION	DATE

JKF ARCHITECTURE
625 LYNNDALE CT., SUITE F, GREENVILLE, NC 27858 252-355-1068

CRAVEN COMMUNITY COLLEGE
CORPORATE TRAINING CENTER
NEW BERN, NC

DRAWING TITLE: FIRE PROTECTION PLAN

SCALE: 1/8" = 1'-0"	DRAWING NO: FP1.1
DRAWN: JAD	
CHECKED: BWF	
DATE: 9-1-2024	
PROJECT NO.: 2023-09	

© COPYRIGHT, JKF ARCHITECTURE PC., JOHN K. FARKAS, AIA

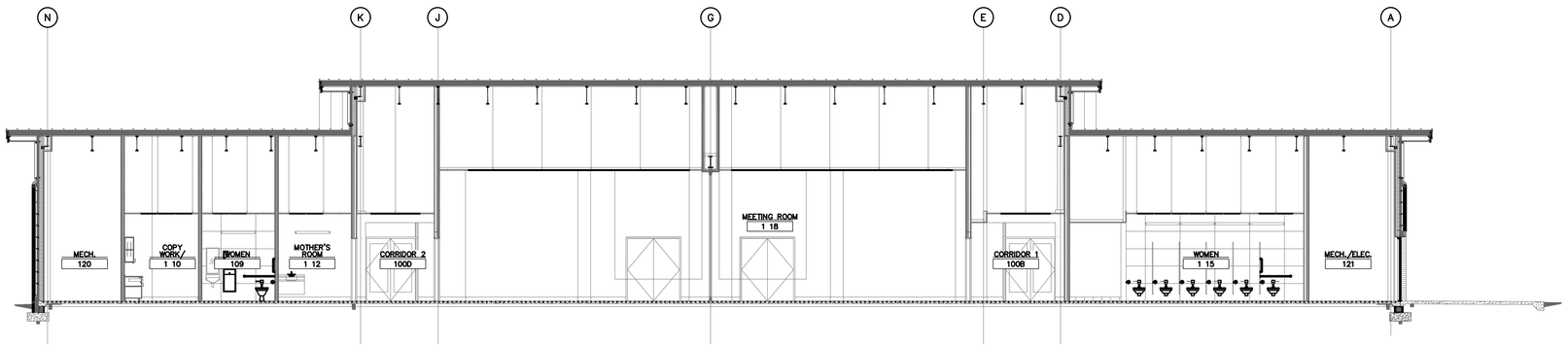

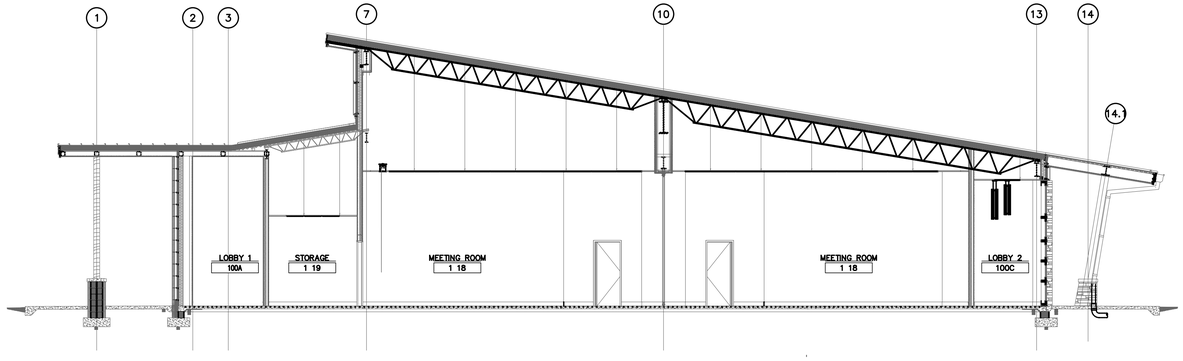

FIRE PROTECTION SECTION VIEW A18

SCALE: 1/8" = 1'-0"

23052

ATLANTEC ENGINEERS, PA 29052
now IMEG
3221 BLUE RIDGE ROAD, SUITE 113
RALEIGH, NC 27612
PH: (919) 571-1111

SEAL

NORTH CAROLINA PROFESSIONAL CORPORATION
IMEG CONSULTANTS CORP.
No. F-1507

SEAL

NORTH CAROLINA PROFESSIONAL ENGINEER SEAL 025036 BRADLEY W. FELTS

9/15/24

GENERAL NOTES

KEY PLAN

SCO ID #23-26923-01A

NO	REVISION	DATE

JKF ARCHITECTURE
625 LYNNDALE CT., SUITE F, GREENVILLE, NC 27858 252-355-1068

CRAVEN COMMUNITY COLLEGE
CORPORATE TRAINING CENTER
NEW BERN, NC

DRAWING TITLE
FIRE PROTECTION SECTIONS

SCALE: 1/8" = 1'-0"	DRAWING NO: FP2.1
DRAWN: JAD	
CHECKED: BWF	
DATE: 9-1-2024	
PROJECT NO.: 2023-09	

© COPYRIGHT, JKF ARCHITECTURE PC., JOHN K. FARKAS, AIA

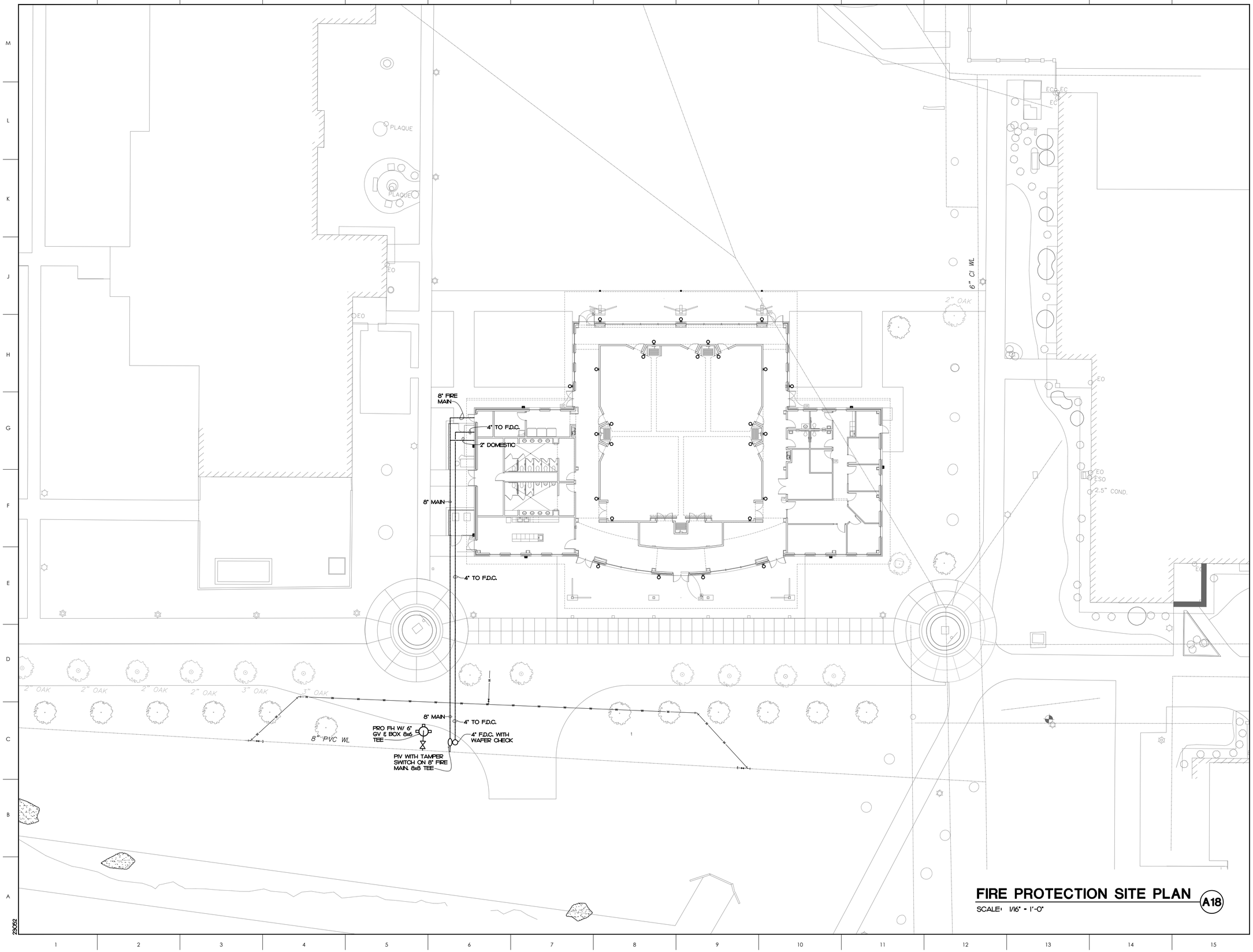

FIRE PROTECTION SITE PLAN A18

SCALE: 1/16" = 1'-0"

23052

ATLANTEC ENGINEERS, PA 29052
now IMEG
3221 BLUE RIDGE ROAD, SUITE 113
RALEIGH, NC 27612
PH: (919) 571-1111

SEAL — NORTH CAROLINA PROFESSIONAL CORPORATION — IMEG CONSULTANTS CORP. No. F-1507

SEAL — NORTH CAROLINA PROFESSIONAL ENGINEER SEAL 025036 BRADLEY W. FELTS — 9/5/24

GENERAL NOTES

KEY PLAN

SCO ID #23-26923-01A

NO	REVISION	DATE

JKF ARCHITECTURE
625 LYNNDALE CT., SUITE F, GREENVILLE, NC 27858 252-355-1068

CRAVEN COMMUNITY COLLEGE
CORPORATE TRAINING CENTER
NEW BERN, NC

DRAWING TITLE: FIRE PROTECTION SITE PLAN

SCALE	1/8" = 1'-0"
DRAWN	JAD
CHECKED	BWF
DATE	9-1-2024
PROJECT NO.	2023-09
DRAWING NO	FP5.1

© COPYRIGHT, JKF ARCHITECTURE PC., JOHN K. FARKAS, AIA

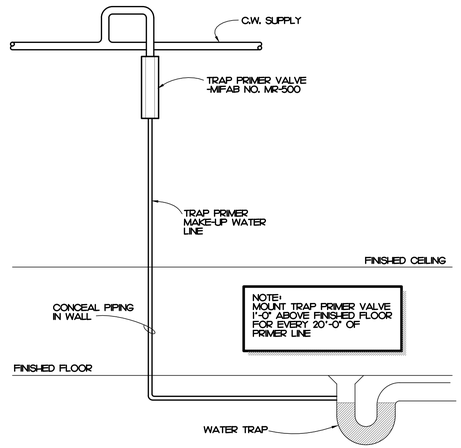

SINGLE TRAP PRIMER DETAIL J8

SCALE: NOT TO SCALE

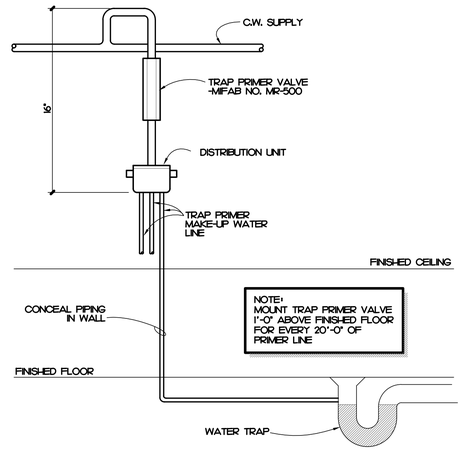

TRAP PRIMER W/ DISTRIBUTION UNIT DETAIL J12

SCALE: NOT TO SCALE

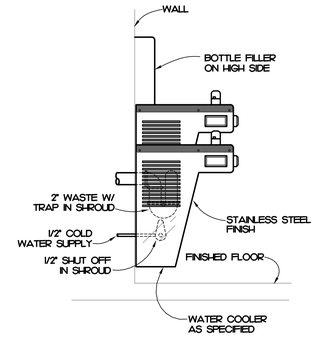

ELECTRIC WATER COOLER DETAIL E12

SCALE: NOT TO SCALE

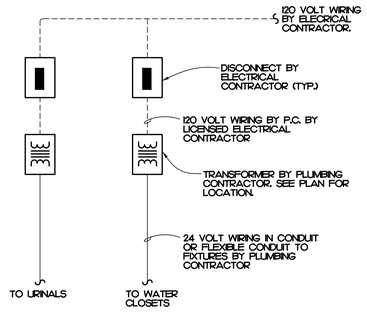

ELECTRICAL WIRING DETAIL A12

SCALE: NOT TO SCALE

PLUMBING GENERAL NOTES

1. ALL WORK SHALL BE DONE IN ACCORDANCE WITH THE 2018 EDITION OF THE NORTH CAROLINA STATE CODE.
2. ANY PERMITS AND INSPECTION FEES SHALL BE SECURED AND PAID FOR BY THE PLUMBING CONTRACTOR.
3. ALL WORK SHALL BE PERFORMED BY EXPERIENCED AND SKILLED CRAFTSMAN. THE PLUMBING CONTRACTOR SHALL COORDINATE ALL OF HIS WORK WITH ALL OTHER CONTRACTORS.
4. THE PLUMBING PLANS AND SPECIFICATIONS SHALL BE THOROUGHLY REVIEWED PRIOR TO PURCHASING MATERIALS AND INSTALLATION. ALL DISCREPANCIES OR INTERFERENCE'S SHALL BE BROUGHT TO THE ENGINEERS ATTENTION.
5. THESE PLANS ARE DIAGRAMMATIC AND MAY NOT SHOW MINOR DETAILS AND LOCATIONS. FOR DIMENSIONS, REFER TO THE ARCHITECTURAL PLANS.
6. THE PLUMBING CONTRACTOR SHALL PROVIDE ALL OPENINGS REQUIRED FOR THE PLUMBING WORK. THE PATCHING SHALL BE BY THE PLUMBING CONTRACTOR AND FINISHING BY GENERAL CONTRACTOR.
7. ALL PIPE, FITTINGS, FIXTURES, AND SOLDER TO BE LEAD FREE.
8. WATER PIPING BELOW GRADE SHALL BE TYPE "K" COPPER (NO JOINTS BELOW GRADE) AND ABOVE GRADE TYPE "L" COPPER. SUPPORTED AS REQUIRED AND SHALL BE HYDROSTATICALLY TESTED FOR ONE HOUR AT 150 PSI. TEST TO COMPLY WITH ALL EPA STANDARDS. THE ENTIRE WATER DISTRIBUTION SYSTEM SHALL BE DISINFECTED PRIOR TO PLACING IN SERVICE.
9. WATER PIPING LOCATED ABOVE CEILINGS AND IN EXTERIOR WALLS SHALL BE ROUTED ON HEATED SIDE OF CEILING INSULATION (UNDERSIDE) AND WALL INSULATION (INSIDE).
10. ALL COLD AND HOT WATER PIPING SHALL BE INSULATED. INSULATE WASTE PIPING AS DESIGNATED ON PLUMBING DRAWINGS. INSULATION SHALL BE 1" FIBERGLASS. EXPOSED PIPING TO BE WRAPPED WITH ALUMINUM JACKET.
11. WATER SHUT - OFF VALVES ABOVE FINISHED CEILING ARE TO BE FREE FROM OBSTRUCTIONS SUCH AS DUCTWORK, LIGHTS, WIRING AND OTHER PIPING SO AS TO PROVIDE EASY ACCESS. MOUNT NO MORE THAN 2'-0" ABOVE FINISHED CEILING.
12. PLUMBING CONTRACTOR SHALL PROVIDE A DIELECTRIC UNION WHEN CONNECTING DISSIMILAR MATERIAL.
13. WATER HEATERS SHALL HAVE AND EFFICIENCY MEETING REQUIREMENTS OF THE NORTH CAROLINA BUILDING CODE.
14. THE PLUMBING CONTRACTOR SHALL BE RESPONSIBLE FOR ALL ELECTRICAL AND CONTROL CONNECTIONS TO THE EQUIPMENT FURNISHED UNDER HIS CONTRACT.
15. SANITARY SEWER AND VENT PIPING SHALL BE SCHEDULE 40 PVC. CELLULAR CORE (FOAM CORE) IS NOT ALLOWED. SANITARY SEWER AND VENT PIPING SHALL BE GAS AND AIR TIGHT.
16. THE PLUMBING CONTRACTOR SHALL COORDINATE ALL WORK WITH OTHER TRADES PRIOR TO INSTALLATION OF ANY WORK.
17. THE PLUMBING CONTRACTOR SHALL REVIEW ALL UTILITY SITE PLANS FOR WORK BY OTHERS. IT SHALL BE THE RESPONSIBILITY OF THE CONTRACTOR TO COORDINATE HIS WORK WITH WORK BY OTHERS AND AVOID ALL CONFLICTS.
18. LOCATIONS OF UTILITIES (WASTE AND WATER PIPING, ETC.) PROVIDED BY OTHERS, THAT ARE TO BE CONNECTED TO ARE ASSUMED. IT SHALL BE THE RESPONSIBILITY OF THE PLUMBING CONTRACTOR TO VERIFY THESE LOCATIONS AND MAKE FINAL CONNECTIONS AS REQUIRED.
19. VERIFY THE LOCATION OF ALL EQUIPMENT SUPPLIED BY OTHERS.
20. ALL VENT PIPING THROUGH THE ROOF SHALL BE A MINIMUM OF 5'-0" FROM ALL MAKE-UP AIR INLETS OR A MINIMUM OF 2'-0" ABOVE THE TOP OF ALL MAKE-UP AIR INLETS. VENTS THROUGH ROOF ARE TO BE ON REAR OF BUILDING.
21. SEE ARCHITECTURAL DRAWINGS FOR PLUMBING MINIMUM FACILITY CALCULATIONS.
22. ALL INDIRECT WASTE IS TO BE PROVIDED WITH AN AIR GAP 2 TIMES THE SIZE OF THE WASTE INLET.
23. THE PLUMBING CONTRACTOR SHALL VERIFY BUILDING FLOOR ELEVATION IS ABOVE MANHOLE RIM ELEVATION OR PROVIDE A BACKWATER VALVE AS REQUIRED.
24. THE PLUMBING CONTRACTOR SHALL PROVIDE THE ENGINEER WITH A SET OF AS-BUILT DRAWINGS UPON COMPLETION OF PROJECT.

PLUMBING SYMBOL LEGEND

SYMBOL	DESCRIPTION
	COLD WATER PIPING
	WATER PIPING DIRECTION OF FLOW
	COLD WATER PIPING BELOW FINISHED FLOOR
	HOT WATER PIPING
	HOT WATER PIPING BELOW FINISHED FLOOR
	HOT WATER RETURN PIPING
	BALL VALVE
	WATER PIPING TURNED DOWN
	WATER PIPING TURNED UP
	PIPING SIDE CONNECTION
	TRAP PRIMER
	SANITARY SEWER / WASTE PIPING
	SANITARY SEWER / WASTE PIPING DIRECTION OF FLOW
	VENT PIPING
	VENT PIPE UP
	NON FREEZE WALL HYDRANT
	HOSE BIBB
	PLUMBING FIXTURE PROVIDED AND INSTALLED BY PLUMBING CONTRACTOR
	FLOOR CLEANOUT
	WALL CLEANOUT
	FLOOR DRAIN
	FLOOR SINK
E.C.	ELECTRICAL EQUIPMENT BY ELECTRICAL CONTRACTOR. ROUTE PIPING TO AVOID.

PLUMBING LOAD SUMMARY

SANITARY SEWER DEMAND FU	WATER DEMAND FU	WATER DEMAND GPM
94.0	206.0	90.0

ATLANTEC ENGINEERS, PA 23052
now IMEG
3221 BLUE RIDGE ROAD, SUITE 113
RALEIGH, NC 27612
PH: (919) 571-1111

SEAL: NORTH CAROLINA PROFESSIONAL CORPORATION — IMEG CONSULTANTS CORP. No. F-1507

SEAL: NORTH CAROLINA PROFESSIONAL ENGINEER SEAL 22035 JAMES B. DELPAPA, JR. 10/15/24

GENERAL NOTES

KEY PLAN

SCO ID #23-26923-01A

NO	REVISION	DATE

JKF ARCHITECTURE
625 LYNNDALE CT., SUITE F, GREENVILLE, NC 27858 252-355-1068

CRAVEN COMMUNITY COLLEGE
CORPORATE TRAINING CENTER
NEW BERN, NC

DRAWING TITLE
PLUMBING LEGENDS, NOTES AND FIXTURE LOAD

SCALE	1/8" = 1'-0"
DRAWN	JAD
CHECKED	JBD
DATE	9-1-2024
PROJECT NO.	2023-09
DRAWING NO	P0.0

© COPYRIGHT, JKF ARCHITECTURE PC, JOHN K. FARKAS, AIA

23052

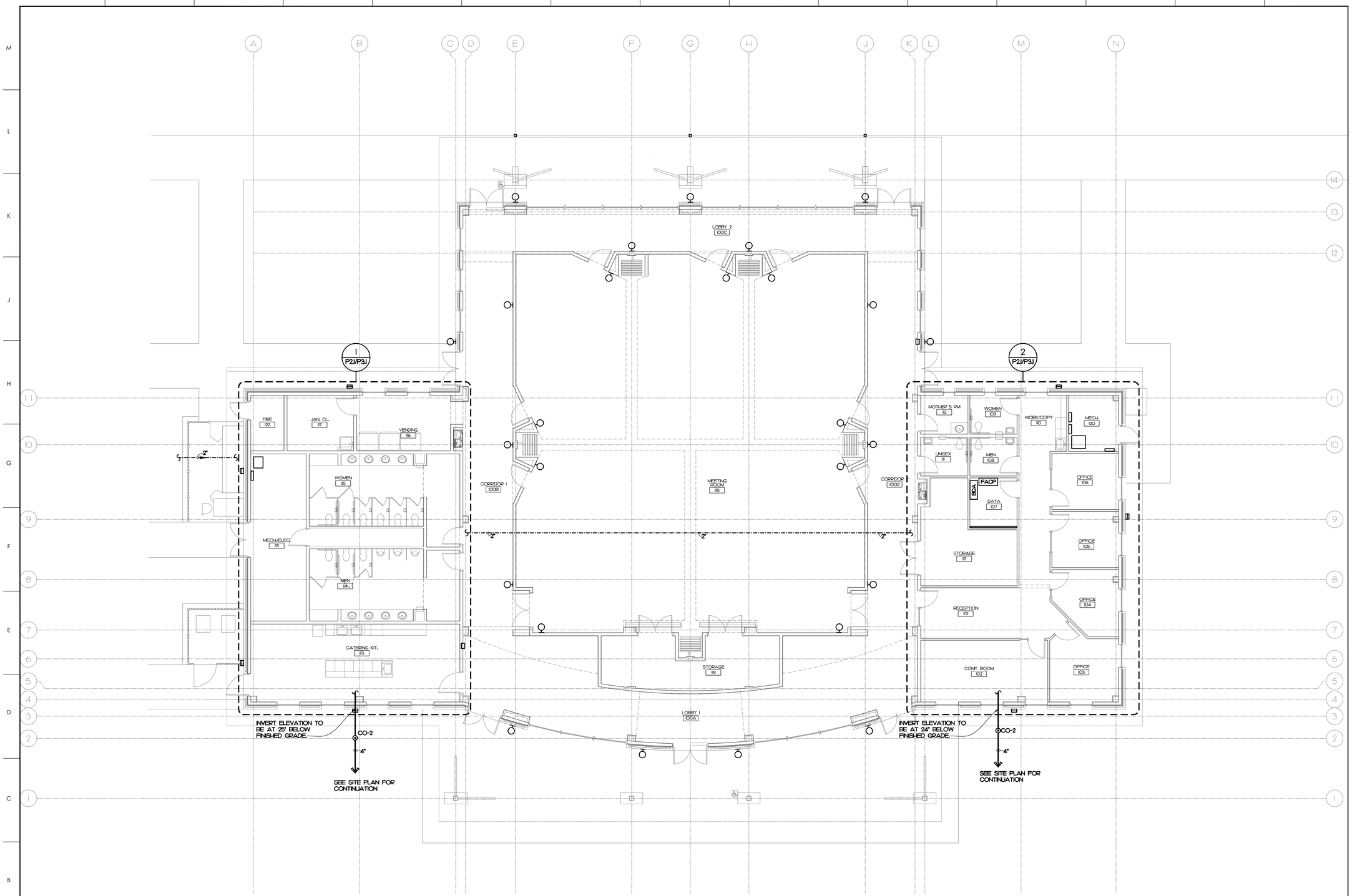

OVERALL PLUMBING PLAN A12

SCALE: 1/8" = 1'-0"

230052

ATLANTEC
ENGINEERS, PA 23052
now IMEG
3221 BLUE RIDGE ROAD, SUITE 113
RALEIGH, NC 27612
PH (919) 571-1111

SEAL

NORTH CAROLINA PROFESSIONAL CORPORATION
IMEG CONSULTANTS CORP.
No. F-1507

SEAL

NORTH CAROLINA PROFESSIONAL ENGINEER SEAL 22035

GENERAL NOTES

KEY PLAN

SCO ID #23-26923-01A

NO	REVISION	DATE

JKF ARCHITECTURE
625 LYNNDALE CT., SUITE F, GREENVILLE, NC 27858 252-355-1068

CRAVEN COMMUNITY COLLEGE
CORPORATE TRAINING CENTER
NEW BERN, NC

DRAWING TITLE
PLUMBING OVERALL PLAN - WATER

SCALE: 1/8" = 1'-0"	DRAWING NO: P1.1
DRAWN: JAD	
CHECKED: JBD	
DATE: 9-1-2024	
PROJECT NO.: 2023-09	

© COPYRIGHT, JKF ARCHITECTURE P.C., JOHN K. FARKAS, AIA

PLUMBING KEY NOTES

1 FLOOR DRAIN PRIMED BY HOSE BIBB.

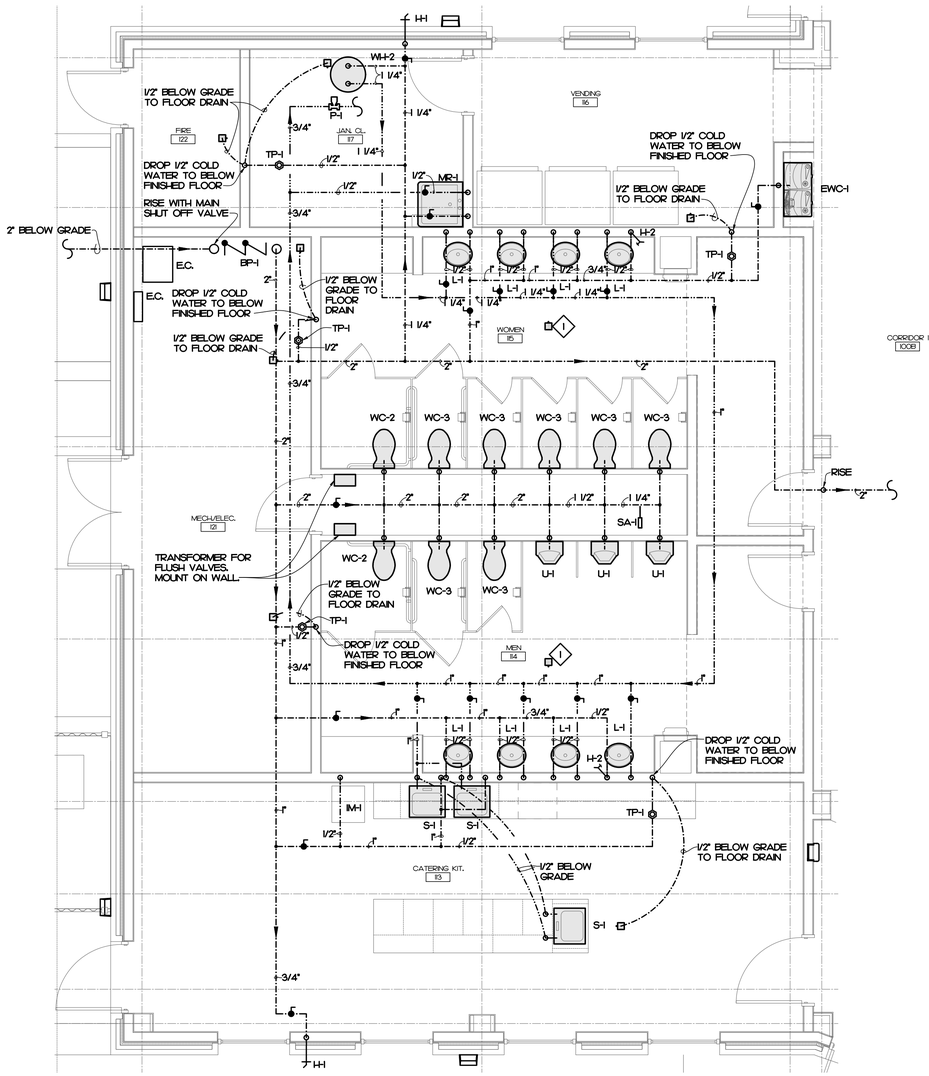

SCALE: 1/4" = 1'-0"

ENLARGED WATER PIPING PLAN (A8)

SCALE: 1/4" = 1'-0"

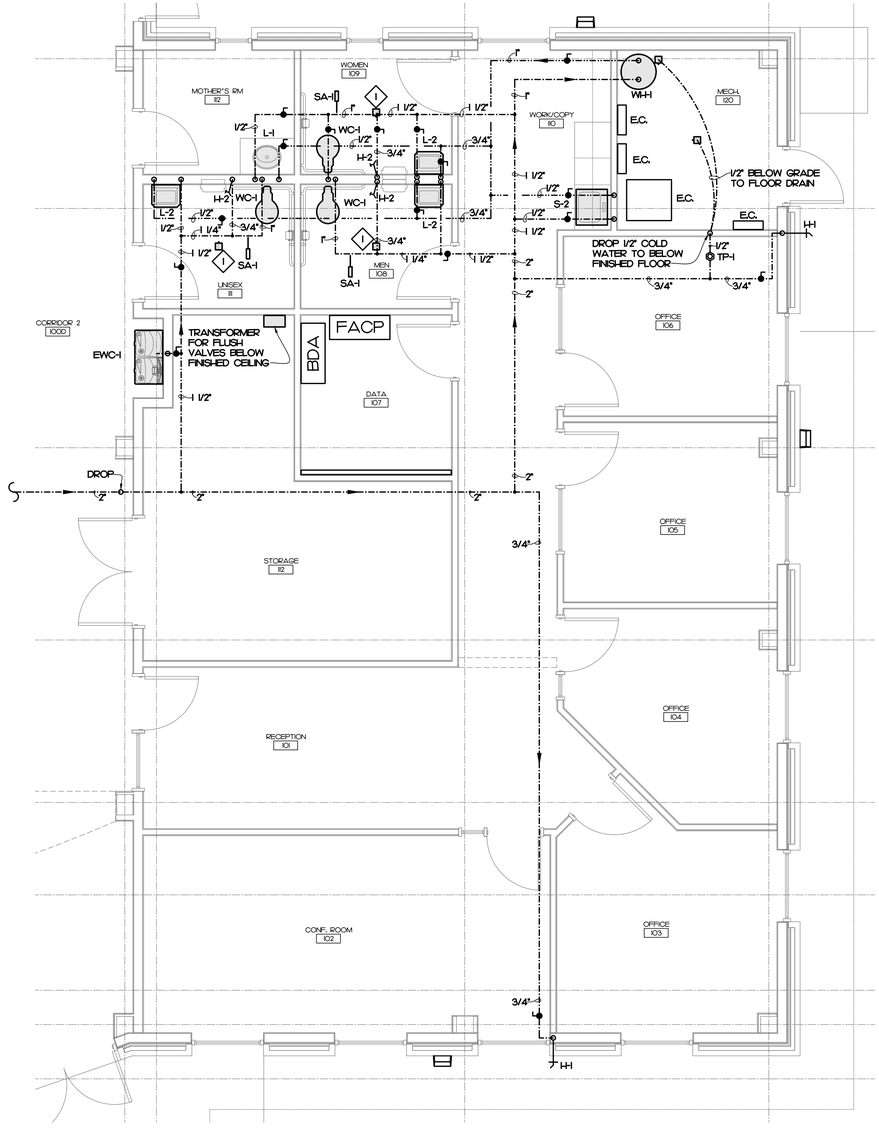

SCALE: 1/4" = 1'-0"

ENLARGED WATER PIPING PLAN (A18)

SCALE: 1/4" = 1'-0"

ATLANTEC ENGINEERS, PA 23052
now IMEG
3221 BLUE RIDGE ROAD, SUITE 113
RALEIGH, NC 27612
PH: (919) 571-1111

SEAL

NORTH CAROLINA PROFESSIONAL CORPORATION IMEG CONSULTANTS CORP. No. F-1507

SEAL

NORTH CAROLINA PROFESSIONAL ENGINEER SEAL 22035 JAMES D. ROSS, JR.

10/15/24

GENERAL NOTES

KEY PLAN

SCO ID #23-26923-01A

NO	REVISION	DATE

JKF ARCHITECTURE
625 LYNNDALE CT., SUITE F, GREENVILLE, NC 27858 252-355-1068

CRAVEN COMMUNITY COLLEGE
CORPORATE TRAINING CENTER
NEW BERN, NC

DRAWING TITLE
PLUMBING ENLARGED PLAN – WATER

SCALE	1/8" = 1'-0"
DRAWN	JAD
CHECKED	JBD
DATE	9-1-2024
PROJECT NO.	2023-09
DRAWING NO	P2.1

© COPYRIGHT, JKF ARCHITECTURE PC, JOHN K. FARKAS, AIA

23052

PLUMBING KEY NOTES

1. DROP 4" WASTE DOWN TO BELOW GRADE.
2. PROVIDE WITH AIR ADMITTANCE VALVE.

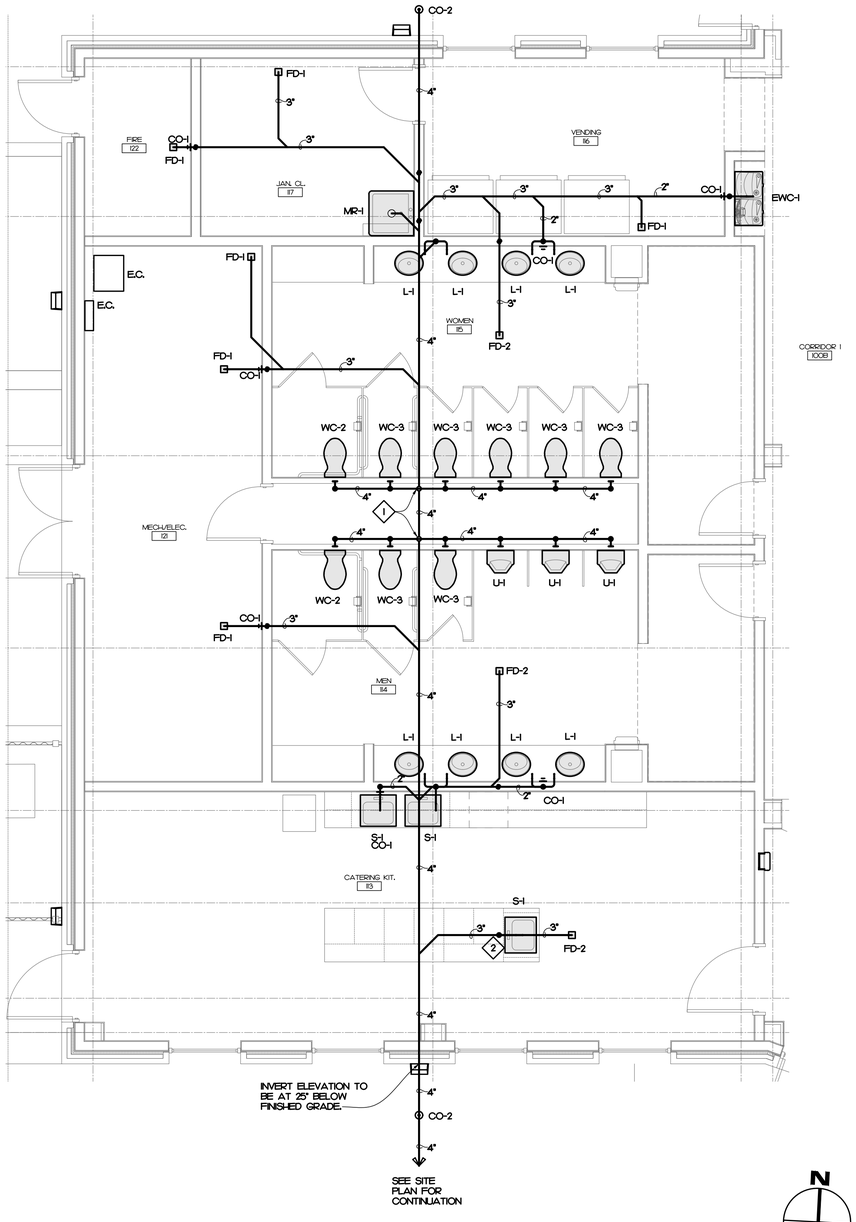

SCALE: 1/4" = 1'-0"

ENLARGED WASTE PIPING PLAN (A8)

SCALE: 1/4" = 1'-0"

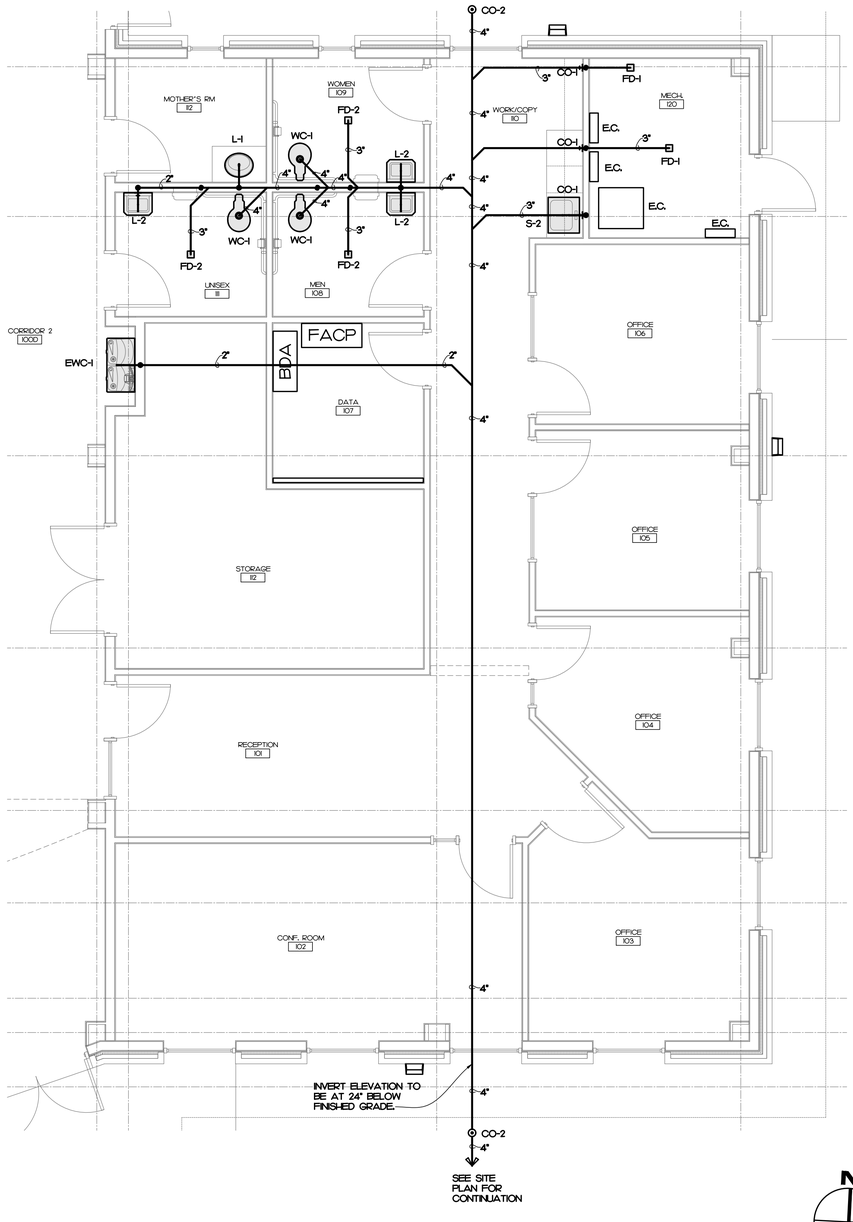

SCALE: 1/4" = 1'-0"

ENLARGED WASTE PIPING PLAN (A18)

SCALE: 1/4" = 1'-0"

ATLANTEC ENGINEERS, PA 23052
now IMEG
3221 BLUE RIDGE ROAD, SUITE 113
RALEIGH, NC 27612
PH: (919) 571-1111

SEAL: NORTH CAROLINA PROFESSIONAL CORPORATION — IMEG CONSULTANTS CORP. No. F-1507

SEAL: NORTH CAROLINA PROFESSIONAL ENGINEER SEAL 22035 JAMES B. DELPAPA, JR.

10/15/24

GENERAL NOTES

KEY PLAN

SCO ID #23-26923-01A

NO	REVISION	DATE

JKF ARCHITECTURE
625 LYNNDALE CT., SUITE F, GREENVILLE, NC 27858 252-355-1068

CRAVEN COMMUNITY COLLEGE
CORPORATE TRAINING CENTER
NEW BERN, NC

DRAWING TITLE: PLUMBING ENLARGED PLAN – WASTE

SCALE	1/8" = 1'-0"
DRAWN	JAD
CHECKED	JBD
DATE	9-1-2024
PROJECT NO.	2023-09
DRAWING NO	P3.1

© COPYRIGHT, JKF ARCHITECTURE PC, JOHN K. FARKAS, AIA

23052

ALL VENT PIPING IS TO BE 2" UNLESS NOTED OTHERWISE.

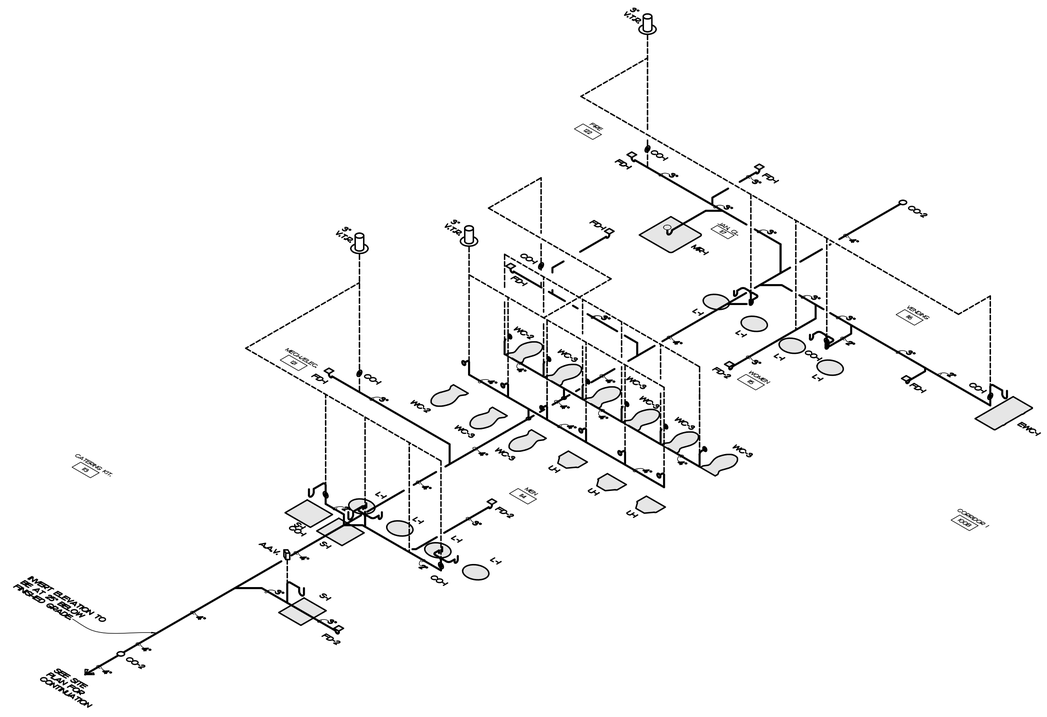

WASTE RISER

SCALE: NOT TO SCALE

A8

ALL VENT PIPING IS TO BE 2" UNLESS NOTED OTHERWISE.

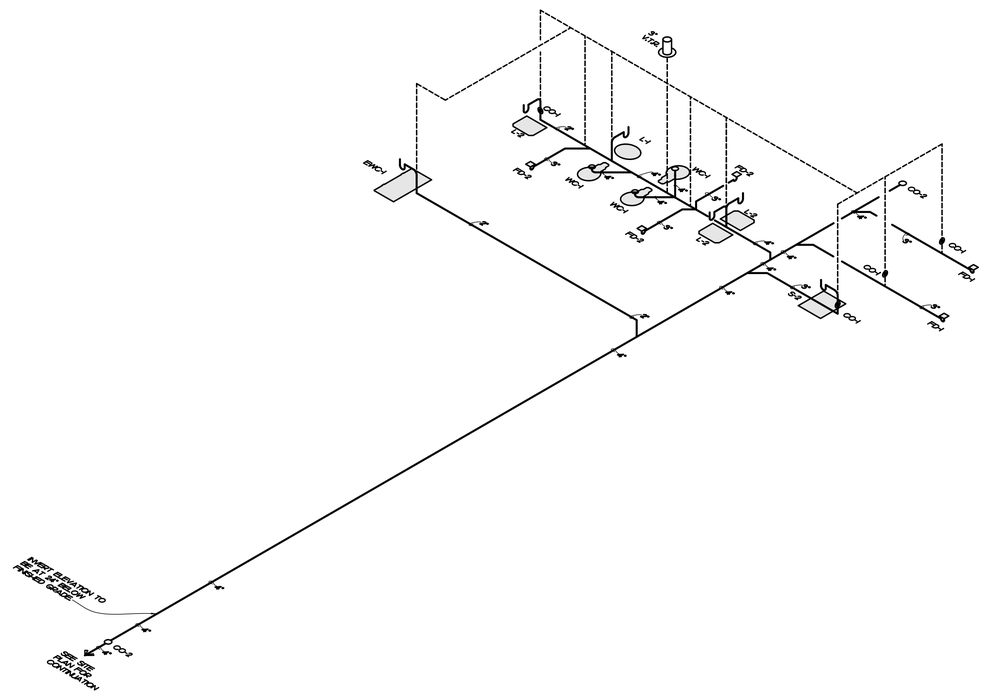

WASTE RISER

SCALE: NOT TO SCALE

A18

ATLANTEC
ENGINEERS, PA 23052
now IMEG
3221 BLUE RIDGE ROAD, SUITE 113
RALEIGH, NC 27612
PH: (919) 571-1111

SEAL

NORTH CAROLINA PROFESSIONAL CORPORATION
IMEG CONSULTANTS CORP. No. F-1507

SEAL

NORTH CAROLINA PROFESSIONAL ENGINEER SEAL 22035

10/15/24

GENERAL NOTES

KEY PLAN

SCO ID #23-26923-01A

NO	REVISION	DATE

JKF ARCHITECTURE
625 LYNNDALE CT., SUITE F, GREENVILLE, NC 27858 252-355-1068

CRAVEN COMMUNITY COLLEGE
CORPORATE TRAINING CENTER
NEW BERN, NC

DRAWING TITLE
PLUMBING WASTE RISERS

SCALE: 1/8" = 1'-0"	DRAWING NO: P4.1
DRAWN: JAD	
CHECKED: JBD	
DATE: 9-1-2024	
PROJECT NO.: 2023-09	

© COPYRIGHT, JKF ARCHITECTURE PC, JOHN K. FARKAS, AIA

23052

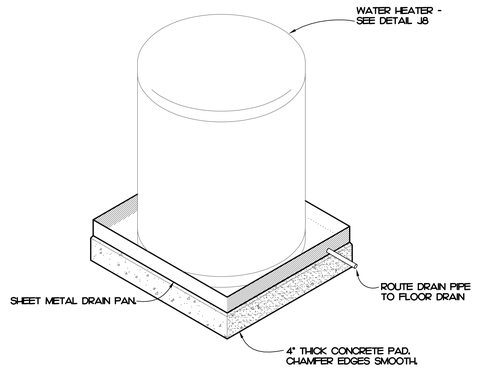

WATER HEATER MOUNTING DETAIL (WH-1) J4

SCALE: NOT TO SCALE

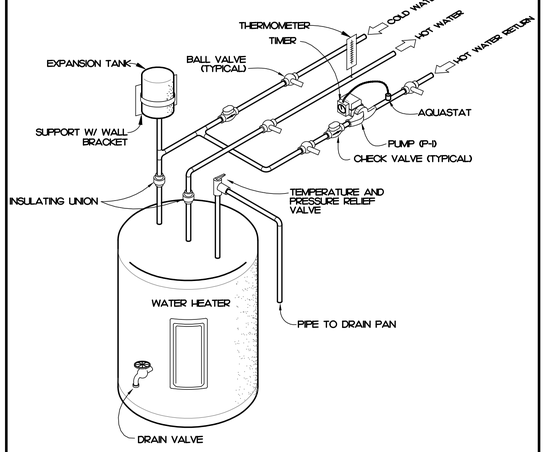

WATER HEATER DETAIL (WH-1&2) J8

SCALE: NOT TO SCALE

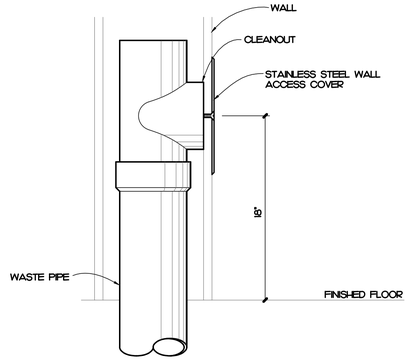

WALL CLEANOUT DETAIL J12

SCALE: NOT TO SCALE

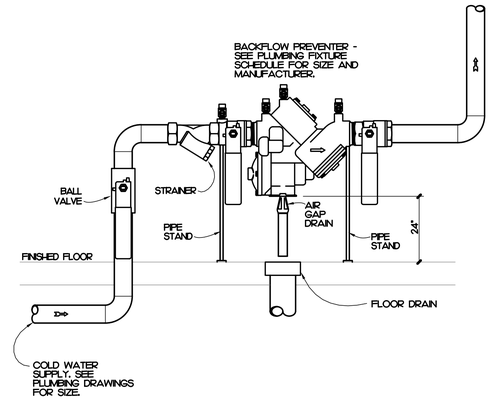

BACKFLOW PREVENTER DETAIL J15

SCALE: NOT TO SCALE

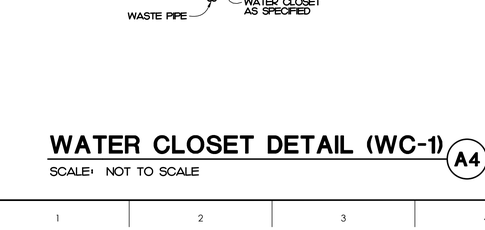

WATER HEATER MOUNTING DETAIL (WH-2) E4

SCALE: NOT TO SCALE

URNIAL DETAIL E8

SCALE: NOT TO SCALE

NOTE: SEE SITE AND/OR UTILITY PLAN FOR LOCATION AND FINISH GRADE ELEVATION

EXTERIOR CLEANOUT DETAIL E12

SCALE: NOT TO SCALE

INTERIOR HOSE BIBB DETAIL E15

SCALE: NOT TO SCALE

WATER CLOSET DETAIL (WC-1) A4

SCALE: NOT TO SCALE

WATER CLOSET DETAIL (WC-2&3) A8

SCALE: NOT TO SCALE

VENT THROUGH ROOF DETAIL A12

SCALE: NOT TO SCALE

EXTERIOR HOSE BIBB DETAIL A15

SCALE: NOT TO SCALE

ATLANTEC
ENGINEERS, PA 23052
now IMEG
3221 BLUE RIDGE ROAD, SUITE 113
RALEIGH, NC 27612
PH: (919) 571-1111

SEAL — NORTH CAROLINA PROFESSIONAL ENGINEERING CORPORATION — IMEG CONSULTANTS CORP. No. F-1507

SEAL — NORTH CAROLINA PROFESSIONAL — SEAL 22035 — ENGINEER — JOHN K. FARKAS

GENERAL NOTES

KEY PLAN

SCO ID #23-26923-01A

NO	REVISION	DATE

JKF ARCHITECTURE
625 LYNNDALE CT., SUITE F, GREENVILLE, NC 27858 252-355-1068

CRAVEN COMMUNITY COLLEGE
CORPORATE TRAINING CENTER
NEW BERN, NC

DRAWING TITLE: PLUMBING DETAILS

SCALE	1/8" = 1'-0"
DRAWN	JAD
CHECKED	JBD
DATE	9-1-2024
PROJECT NO.	2023-09
DRAWING NO	P5.1

© COPYRIGHT, JKF ARCHITECTURE P.C., JOHN K. FARKAS, AIA

23052

PLUMBING FIXTURE SCHEDULE

SYMBOL / IMAGE	DESCRIPTION	3 - EQUALS						PIPING CONNECTIONS		
		MANUFACTURER	MODEL NUMBER	MANUFACTURER	MODEL NUMBER	MANUFACTURER	MODEL NUMBER	COLD WATER	HOT WATER	SANITARY SEWER
BP-1	BACKFLOW PREVENTOR	WATTS	LF909QTM-S	WILKINS	975XL2-S	FEBCO	LF860	2"	-	-
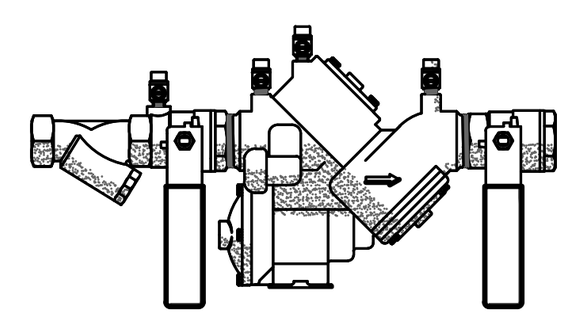	LEAD FREE, REDUCED PRESSURE ZONE WITH BALL VALVES AND STRAINER. MOUNT 24" ABOVE FINISHED FLOOR.									
CO-1	WALL CLEANOUT	ZURN	CO-2413-PVC	MIFAB		JR SMITH		-	-	SEE PLUMB. DRAWINGS
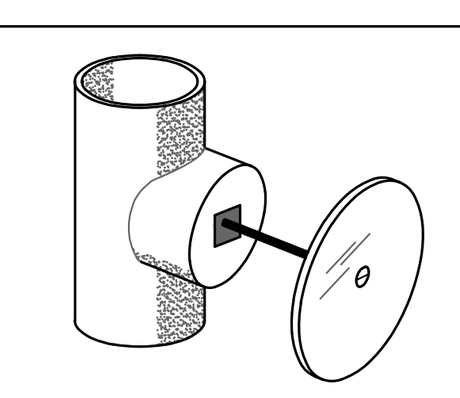	ACCESS COVER	ZURN	CO-2530-SS	MIFAB		JR SMITH				
	PVC CLEANOUT BODY AND PLUG TO BE GAS AND WATER TIGHT. PLUG TO HAVE A BRASS THREADED INSERT TO RECEIVE SECURING SCREW FOR STAINLESS STEEL ROUND ACCESS COVER.									
CO-2	EXTERIOR CLEANOUT	ZURN	Z-1449-BP	WATTS	CO-380-34B	JR SMITH	4283	-	-	SEE PLUMB. DRAWINGS
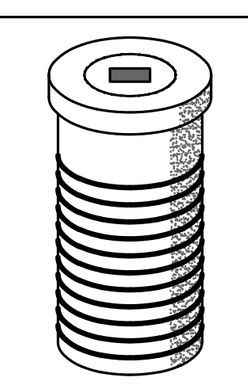	CLEANOUT FERRULE WITH CAST IRON BODY, WITH GAS AND WATERTIGHT BRONZE PLUG, MOUNT IN CONCRETE.									
♿ EWC-1	WATER COOLER	OASIS	P8SBFSL	ELKAY	LZSTL8WS	HALSEY TAYLOR	HTHB-HACDBLPV-WF	1/2"	-	2"
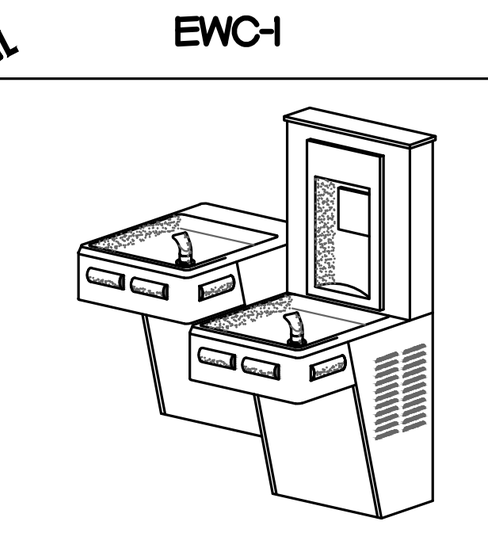	PROVIDE WITH FRONT AND SIDE CONTROLS, SHUT-OFF VALVE, CARRIER, AND TRAP. PROVIDE STAINLESS STEEL FINISH. PROVIDE WITH BOTTLE FILLER.									
FD-1	FLOOR DRAIN	ZURN	ZN415I	WATTS	FD-100-ER	MIFAB	F100-CC-DD	1/2"	-	3"
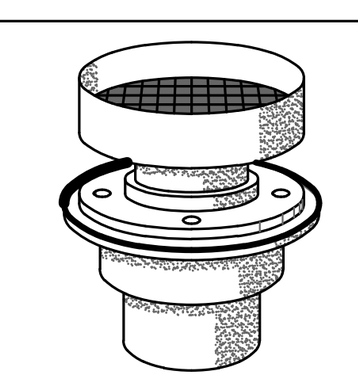	FLOOR DRAIN TO HAVE A CAST IRON BODY WITH 3" BOTTOM OUTLET, ADJUSTABLE COLLAR, POLISHED 7" DIAMETER NICKEL BRONZE STRAINER, AND 1/2" TRAP PRIMER CONNECTION.									
FD-2	FLOOR DRAIN	ZURN	ZN415H	WATTS	FD-100-FC	MIFAB	F1000-C	1/2"	-	3"
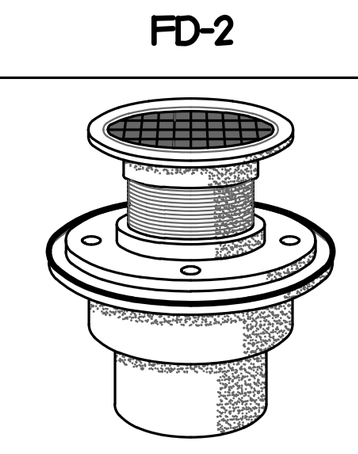	FLOOR DRAIN TO HAVE A 3" WASTE BOTTOM OUTLET, CAST IRON BODY WITH ADJUSTABLE COLLAR, POLISHED NICKEL BRONZE ROUND HEELPROOF STRAINER, AND 1/2" TRAP PRIMER CONNECTION.									
H-H	ANTIFREEZE HOSE BIBB	WOODFORD	65	WATTS	HY-420	MIFAB	MHY-15	3/4"	-	-
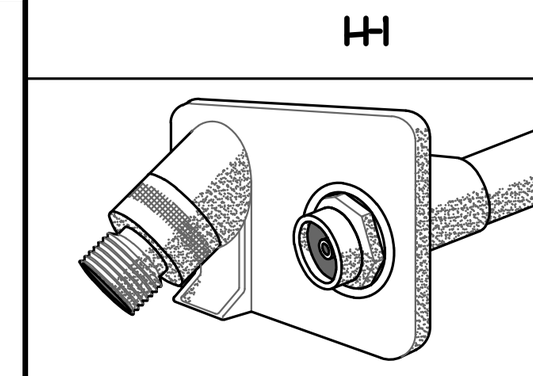	ANTIFREEZE HOSE BIBB SHALL HAVE AUTOMATIC DRAINING WITH ANTI-SIPHON VACUUM BREAKER. 3/4" INLET AND OUTLET. EXTERIOR FINISH TO BE CHROME. PROVIDE WITH LOOSE TEE KEY FOR EACH HOSE BIBB. MOUNT 12" ABOVE FINISHED GRADE.									
H-2	HOSE BIBB	WOODFORD	24	MIFAB	MHY-9000-NPB	ZURN	195XL	3/4"	-	-
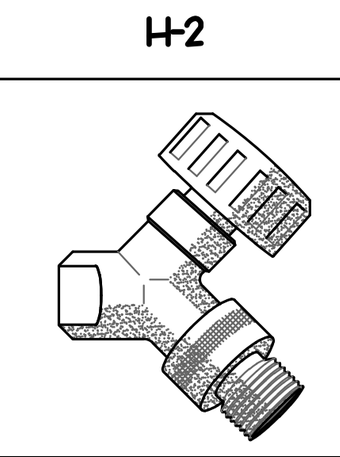	HOSE BIBB SHALL HAVE AUTOMATIC DRAINING WITH ANTI-SIPHON VACUUM BREAKER. 3/4" INLET AND OUTLET. EXTERIOR FINISH TO BE CHROME. PROVIDE WITH LOOSE TEE KEY FOR EACH HOSE BIBB.									
L-1	LAVATORY	KOHLER	K-2210-0	AMERICAN STANDARD	9482.000	TOTO	LT569			
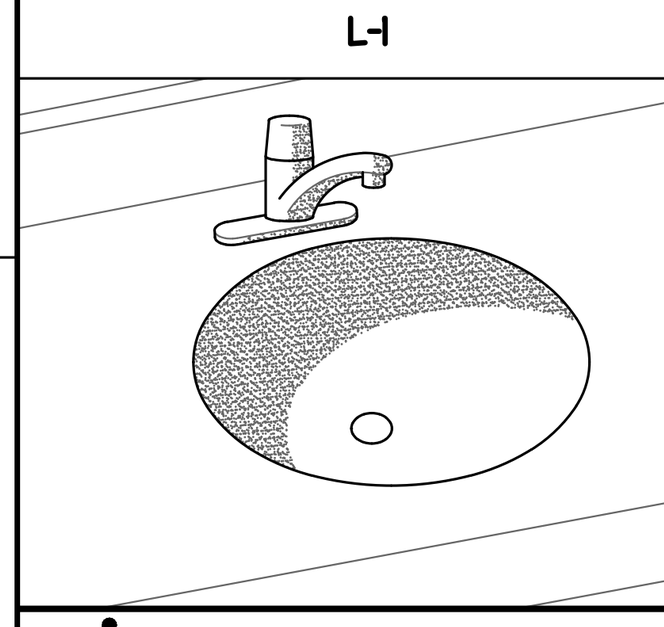	FAUCET	SYMMONS	SLC-6000-0.25	CHICAGO FAUCETS	3500	AMERICAN STANDARD	1340.105			
	TRAP	McGUIRE	8902	DEARBORN BRASS	702-1	KOHLER	K-8999			2"
	SUPPLY	McGUIRE	158LK	BRASS CRAFT	R1912AC	KOHLER	K-7605-P-CP	1/2"	1/2"	
	UNDERCOUNTER LAVATORY SHALL BE MADE OF VITREOUS CHINA AND HAVE AN OVERFLOW. DECK METERED FAUCET SHALL BE CHROME FINISH, AND PROVIDED WITH MIXING VALVE WITH 3/8" COPPER SUPPLY TUBE INLETS, AND PROVIDED WITH AN AERATOR. RIGID SUPPLY KIT SHALL INCLUDE BRASS PLATED BRASS STOPS WITH THREADED CONNECTIONS, FULL TURN BRASS STEM, REDUCER, AND BRASS PLATED FLANGE. INLET SHALL BE 3/8" IPS. OUTLET SHALL BE 3/8" IPS. P-TRAP SHALL BE BRASS PLATED BRASS BODY, CAST BRASS ELBOW AND CAST BRASS SLIP NUT, AND FLANGE. PROVIDE WITH WATER TEMPERATURE LIMITING DEVICE THAT CONFORMS TO ASSE 1070 OR CSA B125.3.									
♿ L-2	LAVATORY	KOHLER	K-2861-0	AMERICAN STANDARD						
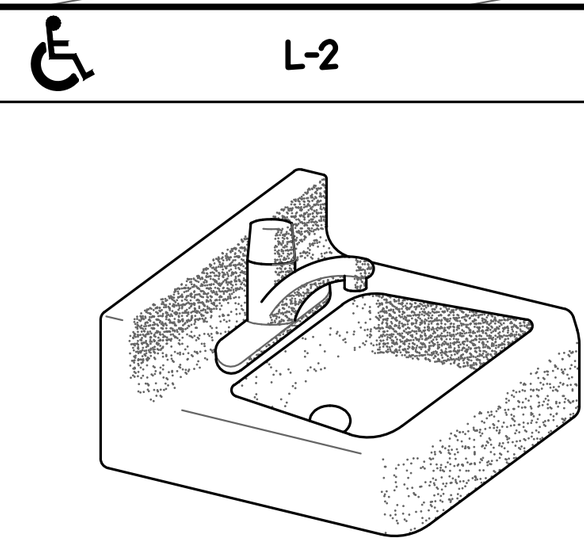	FAUCET	SYMMONS	SLC-6000-0.25	CHICAGO FAUCETS						
	TRAP	McGUIRE	8902	DEARBORN BRASS						
	SUPPLY	McGUIRE	158LK	BRASS CRAFT						
	WALL HUNG LAVATORY SHALL BE MADE OF CAST IRON WITH A WHITE FINISH, HAVE 4" CENTERS, AN OVERFLOW. SEE ARCHITECTURAL DRAWINGS FOR MOUNTING HEIGHT. DECK MOUNTED METERED FAUCET SHALL BE CHROME FINISH, AND PROVIDED WITH MIXING VALVE, WITH 3/8" COPPER SUPPLY TUBE INLETS, AND PROVIDED WITH AN AERATOR. RIGID SUPPLY KIT SHALL INCLUDE CHROME PLATED BRASS STOPS WITH THREADED CONNECTIONS, FULL TURN BRASS STEM, REDUCER, AND FLANGE. INLET SHALL BE 3/8" IPS. OUTLET SHALL BE 3/8" IPS. P-TRAP SHALL BE CHROME PLATED CAST BRASS BODY WITH CLEANOUT, CAST BRASS ELBOW AND CAST BRASS SLIP NUT, AND FLANGE. PROVIDE WITH OFFSET DRAIN, TRUEBRO LAV SHIELD, AND WATER TEMPERATURE LIMITING DEVICE THAT CONFORMS TO ASSE 1070 OR CSA B125.3.									
MR-1	MOP RECEPTOR	STERN WILLIAMS	SB-900	FIAT	TSB100					3"
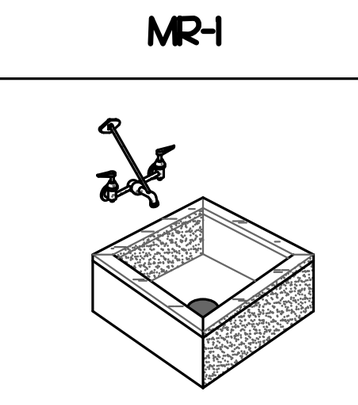	FAUCET	STERN WILLIAMS	T-10-VB	CHICAGO	897RCF	MOEN	8124	1/2"	1/2"	
	HOSE	STERN WILLIAMS	T-35	FIAT	832AA					
	MOP BRACKET	STERN WILLIAMS	T-40	FIAT	889CC					
	MOP RECEPTOR SHALL BE 24" x 24" x 12" DEEP WITH ONE PIECE STAINLESS STEEL CAP, NO FLANGES.									

PLUMBING SCHEDULE NOTES AND LEGEND:

1. SUBMIT CUT SHEETS FOR ALL PROPOSED FIXTURES TO ARCHITECT PRIOR TO BIDDING.
2. PROVIDE VACUUM BREAKER ON ALL EQUIPMENT REQUIRING PLUMBING.
3. REFER TO MANUFACTURERS WEB SITE FOR CUT SHEETS AND DATA ON THE FIXTURES AND APPURTENANCES USED IN THIS SCHEDULE.

♿ ADA COMPLIANT
⚡ ELECTRICAL POWER
🔥 GAS FIRED

23052

PLUMBING FIXTURE SCHEDULE

SYMBOL / IMAGE	DESCRIPTION	3 - EQUALS						PIPING CONNECTIONS		
		MANUFACTURER	MODEL NUMBER	MANUFACTURER	MODEL NUMBER	MANUFACTURER	MODEL NUMBER	COLD WATER	HOT WATER	SANITARY SEWER
⚡ P-1	RECIRCULATING PUMP	B & G	PL36							
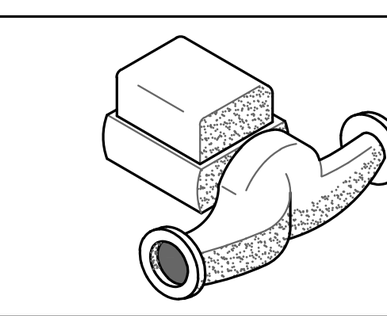	RECIRCULATING PUMP SHALL BE 1/6 HORSEPOWER, 120 VOLT, SINGLE PHASE. PROVIDE PUMP WITH MOUNTING BRACKET, TIMER, AQUASTAT AND DISCONNECT, DISCONNECT WIRING BY LICENSED ELECTRICAL CONTRACTOR.									
♿ S-1	SINK	JUST	US-ADA-1824-A-55-J							
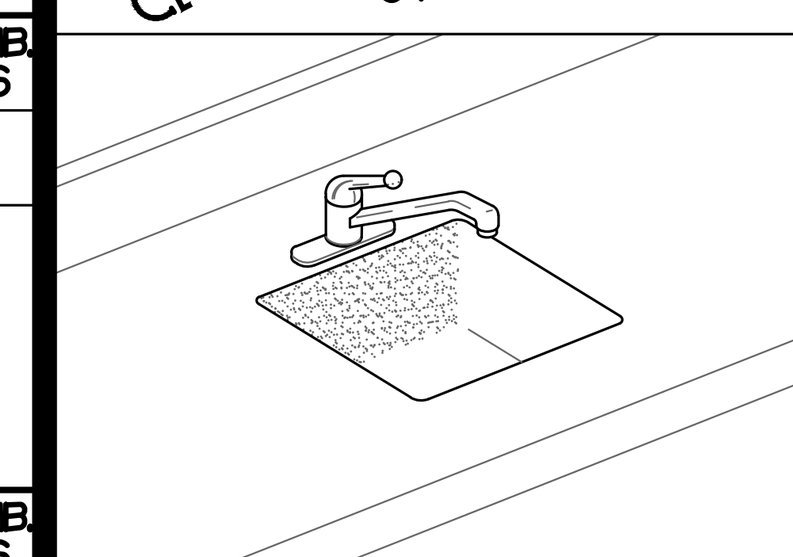	FAUCET	DELTA	400	MOEN	7437	KOHLER		1/2"	1/2"	
	TRAP	McGUIRE	8902	KOHLER	K8999	DEARBORN BRASS	702-1			2"
	SUPPLY	McGUIRE	170	KOHLER	K-76-6-P	BRASSCRAFT	CS400AC			
	STRAINER	JUST	JB-99	ELKAY	LK-99	DEARBORN	L7			
	SINK IS TO BE 18 GAUGE STAINLESS STEEL, UNDERMOUNT. DECK MOUNTED FAUCET SHALL BE CHROME FINISHED, WITH 1/2" INLET AND PROVIDED WITH AN AERATOR. RIDGID SUPPLY KIT SHALL INCLUDE CHROME PLATED BRASS STOPS WITH THREADED CONNECTIONS AND FLANGE. INLET AND OUTLET SHALL BE 3/8" IPS. PROVIDE WITH McGUIRE PROWRAP INSULATOR. PROVIDE WITH SPRAYER, DISHWASHER CONNECTION, AND DISPOSAL IF REQUIRED BY ARCHITECT.									
♿ S-2	1-COMPARTMENT SINK	JUST	US-ADA-1830-A-55-J	ELKAY						
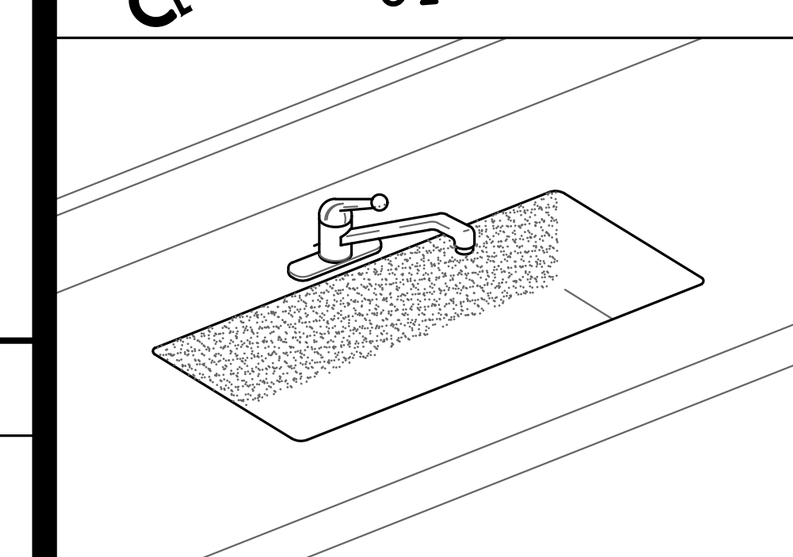	FAUCET	DELTA	400	MOEN	7437	KOHLER		1/2"	1/2"	
	TRAP	McGUIRE	8902	KOHLER	K8999	DEARBORN BRASS	702-1			2"
	SUPPLY	McGUIRE	170	KOHLER	K-76-6-P	BRASSCRAFT	CS400AC			
	STRAINER	JUST	JB-99	ELKAY	LK-99	DEARBORN	L7			
	SINK IS TO BE 18 GAUGE STAINLESS STEEL, UNDER-MOUNT. DECK MOUNTED FAUCET SHALL BE CHROME FINISHED, WITH 1/2" INLET AND PROVIDED WITH AN AERATOR. RIDGID SUPPLY KIT SHALL INCLUDE CHROME PLATED BRASS STOPS WITH THREADED CONNECTIONS AND FLANGE. INLET AND OUTLET SHALL BE 3/8" IPS. PROVIDE WITH PROVIDE WITH McGUIRE PROWRAP INSULATOR. PROVIDE WITH SPRAYER, DISHWASHER CONNECTION, AND DISPOSAL IF REQUIRED BY ARCHITECT.									
SA-1	SHOCK ABSORBER	JOSAM	75000	ZURN	Z1700	WADE	4480			
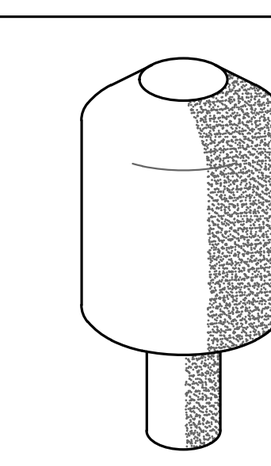	SHOCK ABSORBERS SHALL HAVE A STAINLESS STEEL CASING. FLEXIBLE MECHANICAL BELLOWS. PRESSURIZED INERT GAS CHAMBER AND CERTIFICATION STAMP AS CONFORMING TO STANDARD PDI WH-201 OF THE PLUMBING AND DRAINAGE INSTITUTE.									
TP-1	TRAP PRIMER	MIFAB	MR-500					1/2"	-	-
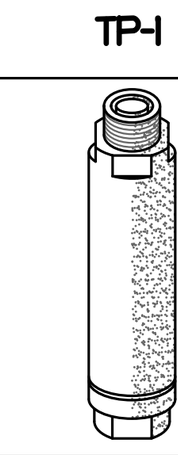	PRESSURE DROP ACTIVATED BRASS TRAP SEAL PRIMER, WITH INLET OPENING OF 1/2" MALE N.P.T. AND OUTLET OPENING OF FEMALE 1/2" N.P.T.. SERVES UP TO 6 FLOOR DRAIN TRAPS.									
⚡ UH-1	URINAL	KOHLER	K-5016-ET	SLOAN	SU7009	AMERICAN STANDARD	6541.132			2"
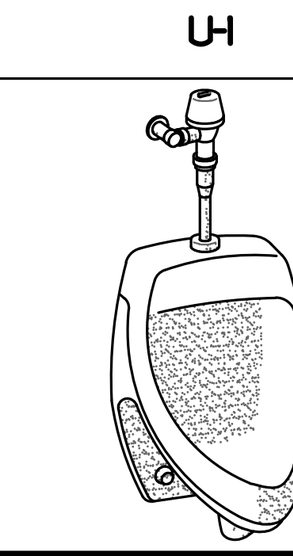	VALVE	SLOAN	8186	DELANY		ZURN		3/4"	-	
	CARRIER	ZURN	Z-1221-5	JR SMITH	636	WATTS	CA-311			
	URNIAL SHALL BE MADE OF VITREOUS CHINA WITH A WHITE FINISH AND 3/4" TOP SPUD. EXPOSED HARDWIRED SENSOR, CHROME PLATED FLUSH VALVE WITH 3/4" CHROME PLATED SPUD, COUPLING AND FLANGE.									
⚡ ♿ WC-1	WATER CLOSET	KOHLER	K-96057-0	SLOAN	ST-2029	AMERICAN STANDARD	2305.100			4"
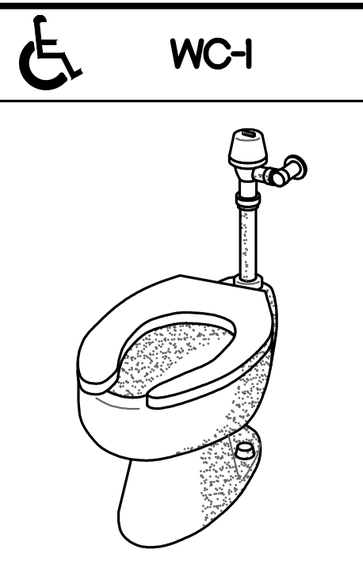	SEAT	BEMIS	1655SSC	KOHLER	K-4670-C-0	CHURCH	9500C			
	VALVE	SLOAN	111-1.6	DELANY		ZURN		1"	-	
	TOILET SHALL BE MADE OF VITREOUS CHINA WITH A WHITE FINISH AND A 12" ROUGH-IN AND 1 1/2" TOP SPUD. SEAT SHALL BE EXTRA HEAVY WEIGHT SOLID PLASTIC WITH OPEN FRONT LESS COVER FOR ELONGATED BOWL. EXPOSED HARDWIRED SENSOR, CHROME PLATED FLUSH VALVE WITH 1 1/2" CHROME PLATED SPUD COUPLING AND FLANGE.									
⚡ WC-2	WATER CLOSET	KOHLER	K-4325	SLOAN	ST-2429	AMERICAN STANDARD				4"
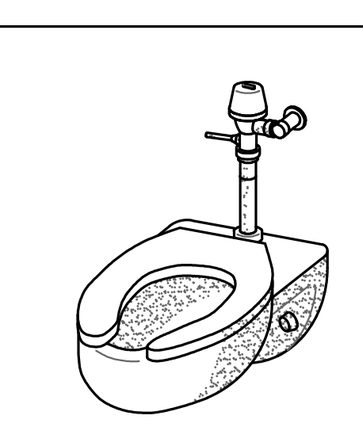	SEAT	BEMIS	1655SSC	KOHLER	K-4670-C-0	CHURCH	9500C			
	VALVE	SLOAN	111-1.6	DELANY	F402-1	ZURN	Z6000-WSI	1"	-	
	CARRIER	SLOAN	ISCA-101	ZURN		MIFAB				
	WALL MOUNTED ELONGATTED TOILET SHALL BE MADE OF VITREOUS CHINA WITH A WHITE FINISH AND 1 1/2" TOP SPUD. SEAT SHALL BE EXTRA HEAVY WEIGHT SOLID PLASTIC WITH OPEN FRONT LESS COVER FOR ELONGATED BOWL. EXPOSED HARDWIRED SENSOR, CHROME PLATED FLUSH VALVE WITH 1 1/2" CHROME PLATED SPUD COUPLING AND FLANGE.									
⚡ ♿ WC-3	WATER CLOSET	KOHLER	K-4325	SLOAN	ST-2429	AMERICAN STANDARD				4"
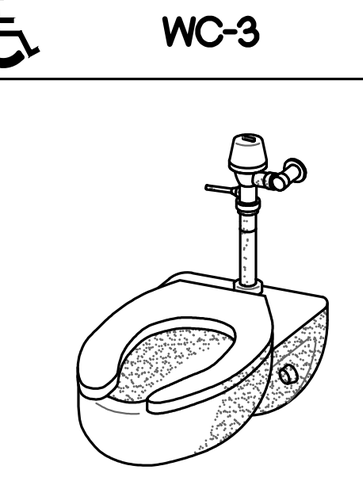	SEAT	BEMIS	1655SSC	KOHLER	K-4670-C-0	CHURCH	9500C			
	VALVE	SLOAN	111-1.6	DELANY	F402-1	ZURN	Z6000-WSI	1"	-	
	CARRIER	SLOAN	ISCA-101	ZURN		MIFAB				
	WALL MOUNTED ELONGATTED TOILET SHALL BE MADE OF VITREOUS CHINA WITH A WHITE FINISH AND 1 1/2" TOP SPUD. SEAT SHALL BE EXTRA HEAVY WEIGHT SOLID PLASTIC WITH OPEN FRONT LESS COVER FOR ELONGATED BOWL. EXPOSED HARDWIRED SENSOR, CHROME PLATED FLUSH VALVE WITH 1 1/2" CHROME PLATED SPUD COUPLING AND FLANGE.									
⚡ WH-1	WATER HEATER	STATE INDUSTRIES	PCE 20 10MSA	A.O. SMITH		LOCHINVAR		1"	1"	
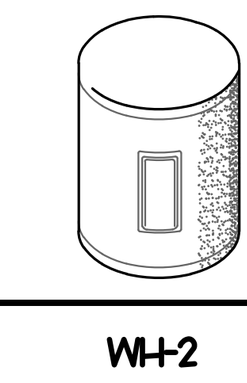	ELECTRIC WATER HEATER SHALL HAVE A 20 GALLON STORAGE CAPACITY, AN ELECTRIC INPUT OF 1.5 KW AT 120 VOLT, SINGLE PHASE AND A RECOVERY OF 6 GPH AT A 100° RISE. PROVIDE WITH THERMOSTATIC MIXING VALVE SET AT 110°F, EXPANSION TANK AND DISCONNECT, WIRING BY LICENSED ELECTRICAL CONTRACTOR. WATER HEATER TO BE PROVIDED WITH HEAT TRAPS AND MEET THE ENERGY EFFICIENCY REQUIREMENT PER 2018 NORTH CAROLINA STATE BUILDING CODE: ENERGY CONSERVATION CODE.									
⚡ WH-2	WATER HEATER	STATE INDUSTRIES	PCE 50 20LSA	RHEEM/RUUD	ELD552	LOCHINVAR		1 1/4"	1 1/4"	
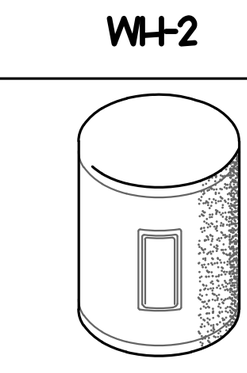	ELECTRIC WATER HEATER SHALL HAVE A 50 GALLON STORAGE CAPACITY, AN ELECTRIC INPUT OF 4.5 KW AT 208 VOLT, SINGLE PHASE AND A RECOVERY OF 19 GPH AT A 100°F RISE. PROVIDE WITH THERMOSTATIC MIXING VALVE SET AT 110°F, EXPANSION TANK AND HEAVY DUTY FUSIBLE DISCONNECT, WIRING BY LICENSED ELECTRICAL CONTRACTOR. WATER HEATER TO BE PROVIDED WITH HEAT TRAPS AND MEET THE ENERGY EFFICIENCY REQUIREMENT PER 2018 NORTH CAROLINA STATE BUILDING CODE: ENERGY CONSERVATION CODE.									

PLUMBING SCHEDULE NOTES AND LEGEND:

1. SUBMIT CUT SHEETS FOR ALL PROPOSED FIXTURES TO ARCHITECT PRIOR TO BIDDING.
2. PROVIDE VACUUM BREAKER ON ALL EQUIPMENT REQUIRING PLUMBING.
3. REFER TO MANUFACTURERS WEB SITE FOR CUT SHEETS AND DATA ON THE FIXTURES AND APPURTENANCES USED IN THIS SCHEDULE.

♿ ADA COMPLIANT
⚡ ELECTRICAL POWER
🔥 GAS FIRED

ATLANTEC ENGINEERS, PA 23052
now IMEG
3221 BLUE RIDGE ROAD, SUITE 113
RALEIGH, NC 27612
PH: (919) 571-1111

SEAL
SEAL

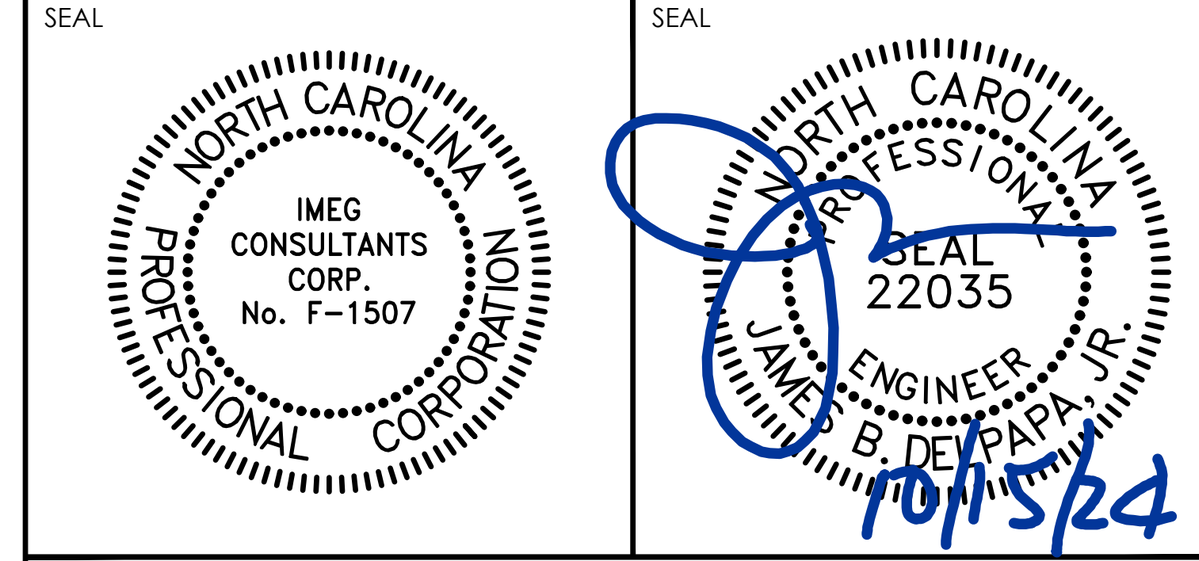

GENERAL NOTES

KEY PLAN

SCO ID #23-26923-01A

NO	REVISION	DATE

JKF ARCHITECTURE

625 LYNNDALE CT., SUITE F, GREENVILLE, NC 27858 252-355-1068

CRAVEN COMMUNITY COLLEGE
CORPORATE TRAINING CENTER
NEW BERN, NC

DRAWING TITLE: PLUMBING FIXTURE SCHEDULE

SCALE: 1/8" = 1'-0"
DRAWN: JAD
CHECKED: JBD
DATE: 9-1-2024
PROJECT NO.: 2023-09
DRAWING NO: P6.1

© COPYRIGHT, JKF ARCHITECTURE PC, JOHN K. FARKAS, AIA

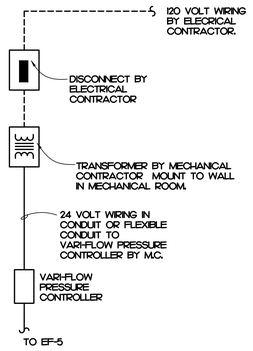

RELIEF FAN WIRING DETAIL J4

NOT TO SCALE

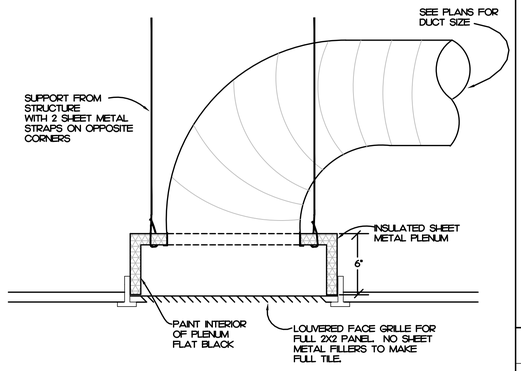

RETURN GRILLE DETAIL J8

NOT TO SCALE

OUTSIDE AIR SUMMARY

REQUIRED:

MEETING ROOM = 3980 SQFT * 0.06 CFM/SQFT + 456 PERSONS * 5 CFM/PERSON = 2519 CFM
OFFICE = 6073 SQFT * 0.06 CFM/SQFT + 10 PERSONS * 5 CFM/PERSON = 414 CFM

TOTAL REQUIRED = 2933 CFM

PROVIDED:

OUTSIDE AIR PROVIDED BY OA-1:

FC-11 = 100 CFM
FC-14 = 300 CFM
FC-15 = 300 CFM
FC-17 = 500 CFM

OUTSIDE AIR PROVIDED BY OA-2:

FC-16 = 550 CFM
FC-18 = 650 CFM

OUTSIDE AIR PROVIDED BY OA-3:

FC-19 = 175 CFM
FC-110 = 175 CFM
FC-111 = 125 CFM
FC-112 = 25 CFM
FC-113 = 25 CFM
FC-114 = 25 CFM
FC-115 = 25 CFM
FC-116 = 25 CFM

TOTAL PROVIDED = 2400 CFM

BUILDING PRESSURIZATION SUMMARY

TOTAL EXHAUST:

EF-1'S = 300 CFM
EF-2 = 1000 CFM
EF-3 = 1000 CFM

TOTAL EXHAUST = 2300 CFM

TOTAL OUTSIDE AIR:

OA-1 = 1200 CFM
OA-2 = 1200 CFM
OA-3 = 600 CFM

TOTAL OUTSIDE AIR = 3000 CFM

BUILDING IS POSITIVE BY 700 CFM WHEN ALL FANS ARE RUNNING

GENERAL NOTES

1. ALL WORK SHALL BE DONE IN ACCORDANCE WITH THE LATEST EDITION OF THE STATE CODE, ALL LOCAL AND OTHER APPLICABLE CODES
2. ANY PERMITS AND INSPECTION FEES SHALL BE SECURED AND PAID FOR BY THE MECHANICAL CONTRACTOR (M.C.).
3. ALL WORK SHALL BE PERFORMED BY EXPERIENCED AND SKILLED CRAFTSMAN. THE M.C. SHALL COORDINATE ALL OF HIS WORK WITH ALL OTHER CONTRACTORS.
4. THE MECHANICAL PLANS AND SPECIFICATIONS SHALL BE THOROUGHLY REVIEWED PRIOR TO PURCHASING MATERIALS AND INSTALLATION. ALL DISCREPANCIES OR INTERFERENCES SHALL BE BROUGHT TO THE ENGINEERS' ATTENTION.
5. THESE PLANS ARE DIAGRAMMATIC AND MAY NOT SHOW MINOR DETAILS AND LOCATIONS. FOR DIMENSIONS, REFER TO THE ARCHITECTURAL PLANS.
6. THE M.C. SHALL BE RESPONSIBLE FOR ALL ELECTRICAL STARTERS, INTERLOCKS, CONTROL WIRING. THE ELECTRICAL CONTRACTOR SHALL PROVIDE POWER WIRING, CONDUIT FROM THE DISCONNECT TO M.C. EQUIPMENT. THE M.C. SHALL BE RESPONSIBLE FOR ALL FINAL CONNECTION TO HIS EQUIPMENT.
7. INSTALL FLEXIBLE CONNECTORS ON SUPPLY AND RETURN DUCTWORK AT ALL AIR HANDLING UNITS.
8. INSTALL TURNING VANES IN ALL DUCTS AT ELBOWS. PROVIDE BALANCING AND SPLITTER DAMPERS WHERE SHOWN AND AS REQUIRED FOR SYSTEM BALANCING.
9. ALL THERMOSTATS, WIRING AND CONDUIT ARE TO BE FURNISHED BY THE M.C. MOUNT THERMOSTATS 4'-0" ABOVE THE FLOOR, UNLESS OTHERWISE NOTED.
10. THE M.C. SHALL INSURE THAT ALL MECHANICAL EQUIPMENT INSTALLED UNDER HIS CONTRACT SHALL OPERATE FREE OF OBJECTIONABLE NOISE AND VIBRATION.
11. THE M.C. SHALL KEEP THE PREMISES CLEAR OF DEBRIS FROM HIS WORK DURING CONSTRUCTION AND LEAVE THE AREA AND BUILDING CLEAN AT THE COMPLETION OF HIS WORK. HE SHALL ALSO LEAVE CLEAN ALL EXPOSED EQUIPMENT IN HIS CONTRACT.
12. FLEXIBLE DUCT RUNOUTS SHALL BE A MAXIMUM OF 10'-0".
13. ALL FLEXIBLE DUCT RUNOUTS SHALL INCLUDE INSULATED DAMPERED BOOTS AT THE POINT OF CONNECTION WITH RECTANGULAR DUCT. PROVIDE ALL FLEXIBLE DUCTWORK WITH FOIL-BACKED, EXTERNALLY WRAPPED INSULATION FOR A MINIMUM OF R-8.
14. ALL DUCTWORK SIZES SHOWN ARE ACTUAL SHEET METAL DIMENSIONS. EXTERNALLY WRAP ALL DUCT WITH 3" FOIL-BACKED INSULATION FOR A MINIMUM OF R-8, UNLESS NOTED OTHERWISE
15. MECHANICAL CONTRACTOR SHALL WORK WITH TEST AND BALANCE CONTRACTOR TO REMEDY ANY DIFFERENCES TO INCLUDE FAN DRIVE CHANGES, INSTALLATION OF DAMPERS OR OTHER MINOR DUCT MODIFICATIONS TO PROVIDE AIRFLOW TO WITHIN +/- 10% OF THE DESIGN VALUES LISTED ON THESE PLANS.
16. THE AIR HANDLING UNIT SHALL OPERATE AT ALL TIMES DURING OCCUPIED HOURS.
17. THE MECHANICAL CONTRACTOR SHALL PROVIDE THE ENGINEER WITH A SET OF AS-BUILT DRAWINGS UPON COMPLETION OF JOB.
18. THE MECHANICAL CONTRACTOR SHALL PROVIDE THE ENGINEER WITH A SET OF DUCT SHOP DRAWINGS FOR APPROVAL.
19. THE MECHANICAL CONTRACTOR SHALL PROVIDE THE ENGINEER WITH A BALANCE REPORT BY A CERTIFIED TEST AND BALANCE COMPANY.
20. PROVIDE PERMIT LABEL ENGRAVED PLASTIC LAMINATE MECHANICALLY FASTENED TO OUTDOOR UNITS.
21. LABEL CEILING GRID WHERE EQUIPMENT IS LOCATED ABOVE LAY-IN CEILING. WITH EQUIPMENT IDENTIFIER. ALSO LABEL ALL TEMPERATURE SENSORS AND THERMOSTATS WITH EQUIPMENT IDENTIFIER.

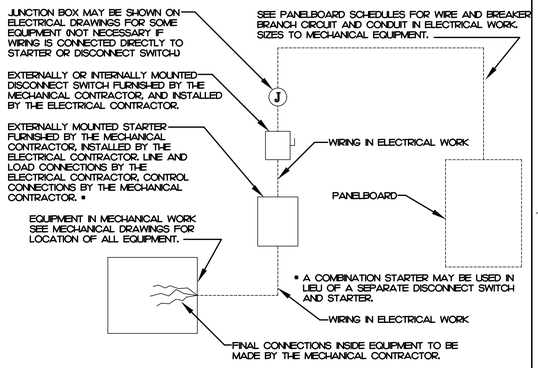

TYPICAL WIRING DETAIL E4

NOT TO SCALE

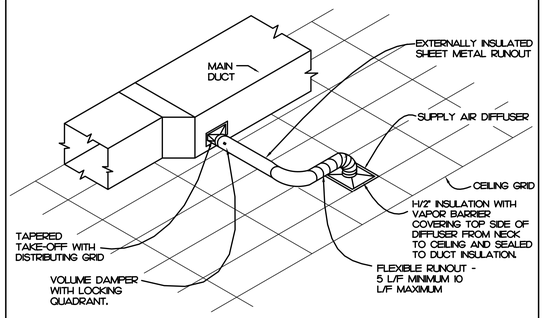

LAY-IN DIFFUSER DETAIL E8

NOT TO SCALE

MECHANICAL SYSTEMS, SERVICE SYSTEMS AND EQUIPMENT METHOD OF COMPLIANCE

PRESCRIPTIVE ☒ ENERGY COST BUDGET ☐

THERMAL ZONE 3A

EXTERIOR DESIGN CONDITIONS
winter dry bulb: 22°F
summer dry bulb: 95°F
relative humidity: 46%

INTERIOR DESIGN CONDITIONS
winter dry bulb: 70°F
summer dry bulb: 74°F
relative humidity: 50%

BUILDING HEATING LOAD: BLOCK LOAD = 111.9 MBH
BUILDING COOLING LOAD: BLOCK LOAD = 393.5 MBH (32.8 TONS)

MECHANICAL SPACING CONDITIONING SYSTEM
Unitary: SEE SCHEDULES ON SHEET(S) M3.1
description of unit:
heating efficiency:
cooling efficiency:
heat output of unit:
cooling output of unit:
Boiler: N.A.
total boiler capacity. If oversized state reason.
Chiller: N.A.
total chiller capacity. If oversized state reason.

LIST EQUIPMENT EFFICIENCIES: SEE SCHEDULES ON SHEET(S) M3.1

EQUIPMENT SCHEDULES WITH MOTORS (MECHANICAL SYSTEMS) SEE SCHEDULES ON SHEET(S) M3.1
motor horsepower:
number of phases:
minimum efficiency:
motor type:
# of poles:

DESIGNER STATEMENT

To the best of my knowledge and belief, the design of this building complies with the mechanical systems, service systems and equipment requirements of the North Carolina State Energy Code.

SIGNED: Patrick McCabe

NAME: Patrick J. McCabe, PE

TITLE: Professional Engineer

SYMBOL LEGEND

SYMBOL	DESCRIPTION
	SHEET METAL DUCT
	FLEXIBLE DUCT
☒	SUPPLY DIFFUSER - LETTER & NUMBER INDICATES TYPE & CFM
⊘	RETURN GRILLE - LETTER & NUMBER INDICATES TYPE & CFM
⊘	EXHAUST GRILLE - LETTER & NUMBER INDICATES TYPE & CFM
	SIDEWALL SUPPLY GRILLE - LETTER & NUMBER INDICATES TYPE & CFM
	SIDEWALL RETURN GRILLE - LETTER & NUMBER INDICATES TYPE & CFM
⊘	EXHAUST FAN
T	THERMOSTAT - MOUNTED 48" ABOVE FINISHED FLOOR
BD	BALANCING DAMPER
	ELBOW WITH TURNING VANES
H	HUMIDISTAT - MOUNTED 48" ABOVE FINISHED FLOOR
S	TEMPERATURE SENSOR - MOUNTED 48" ABOVE FINISHED FLOOR
	MANUAL (BALANCING) DAMPER
XD	WALL MOUNTED CARBON DIOXIDE SENSOR
XM	DUCT MOUNTED CARBON DIOXIDE SENSOR
C	CONDENSATE DRAIN
▲	FIRE DAMPER
	PIPING TURNED DOWN
	PIPING TURNED UP
	PIPING SIDE CONNECTION
	1-HR RATED WALL
P	WALL MOUNTED PRESSURE SENSOR
R	REFRIGERANT LINESET

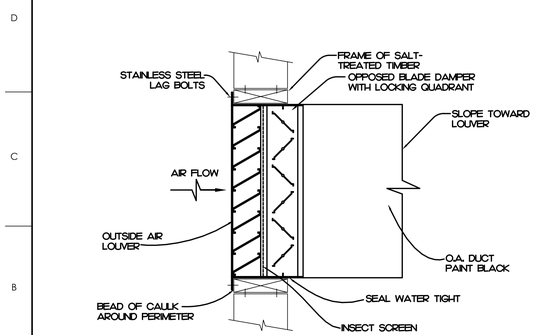

NOTE: OPENING AND FRAME PROVIDED BY THE G.C.

OUTSIDE AIR LOUVER DETAIL A4

NOT TO SCALE

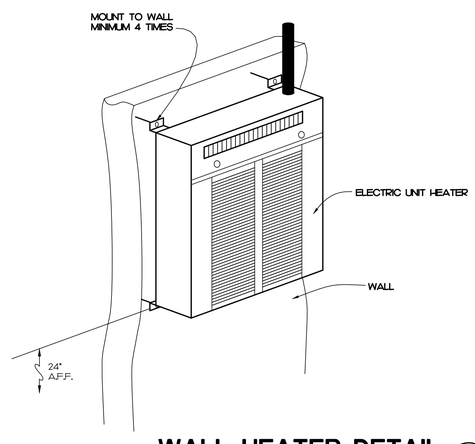

WALL HEATER DETAIL A8

NOT TO SCALE

23052

ATLANTEC ENGINEERS, PA 29052
now IMEG
3221 BLUE RIDGE ROAD, SUITE 113
RALEIGH, NC 27612
PH: (919) 571-1111

SEAL: NORTH CAROLINA PROFESSIONAL CORPORATION — IMEG CONSULTANTS CORP. No. F-1507

SEAL: 10/15/2024 — NORTH CAROLINA PROFESSIONAL — SEAL 051195 — ENGINEER — PATRICK J. MCCABE

GENERAL NOTES

KEY PLAN

SCO ID #23-26923-01A

NO	REVISION	DATE

JKF ARCHITECTURE
625 LYNNDALE CT., SUITE F, GREENVILLE, NC 27858 252-355-1068

CRAVEN COMMUNITY COLLEGE
CORPORATE TRAINING CENTER
NEW BERN, NC

DRAWING TITLE
MECHANICAL NOTES, LEGEND, AND DETAILS

SCALE	DRAWING NO
1/8" = 1'-0"	M0.0
DRAWN: PJM	
CHECKED: PJM	
DATE: 9-1-2024	
PROJECT NO.: 2023-09	

© COPYRIGHT. JKF ARCHITECTURE PC., JOHN K. FARKAS, AIA

MECHANICAL KEY NOTES

1. PROVIDE 24X24 OUTSIDE AIR LOUVER EQUAL TO POTTORFF EFD-437 FOR 1.5 SQFT OF FREE AREA. PROVIDE WITH KYNAR FINISH AND INSECT SCREEN. COORDINATE MOUNTING HEIGHT AND FINISH WITH ARCHITECT.
2. PROVIDE 24X24 EXHAUST AIR LOUVER EQUAL TO POTTORFF EFD-437 FOR 1.25 SQFT OF FREE AREA. PROVIDE WITH KYNAR FINISH AND INSECT SCREEN. COORDINATE MOUNTING HEIGHT AND FINISH WITH ARCHITECT.

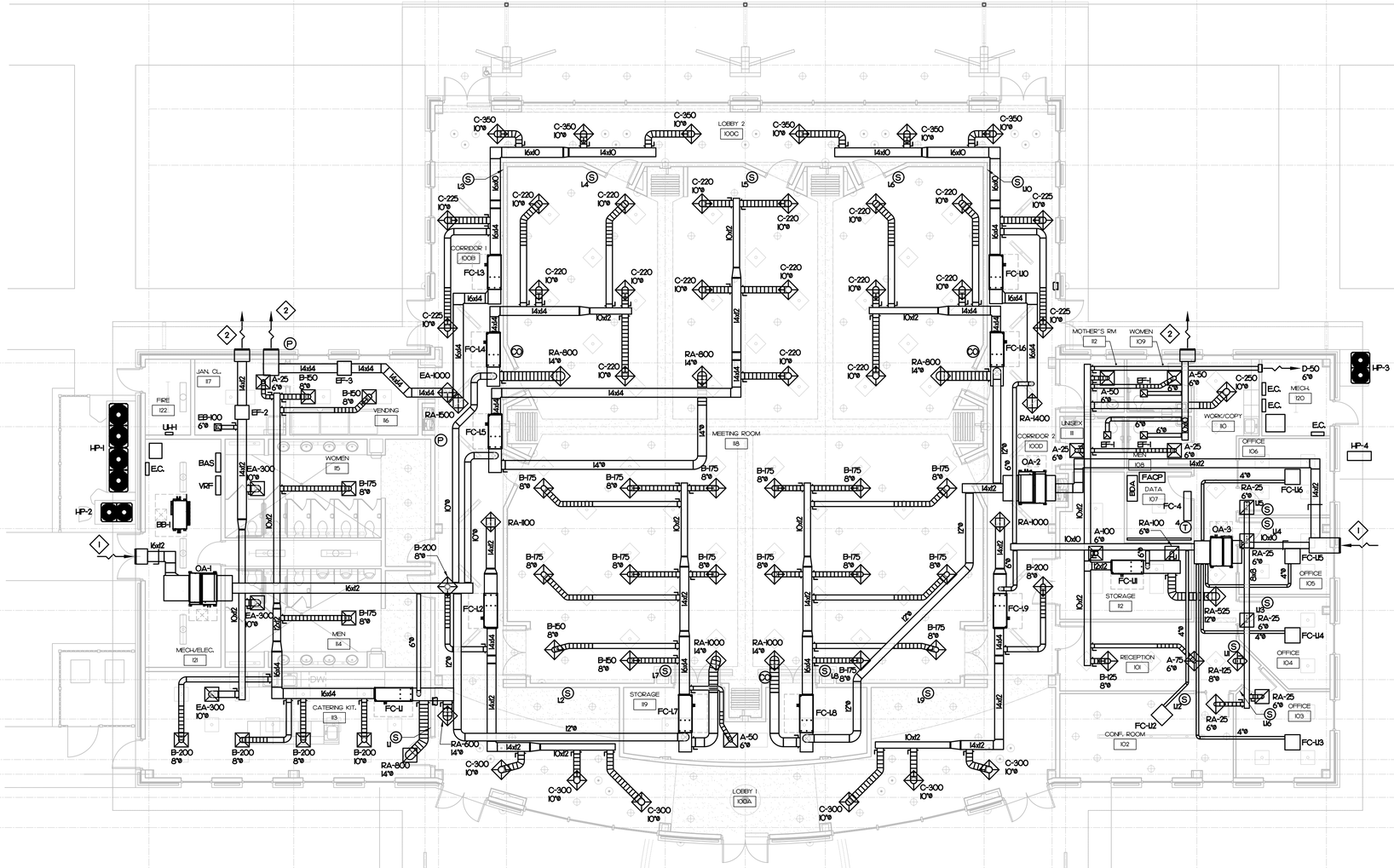

0 4' 8' 16'

SCALE: 1/8" = 1'-0"

MECHANICAL PLAN

SCALE: 1/8" = 1'-0"

A15

ATLANTEC ENGINEERS, PA 29052
now IMEG
3221 BLUE RIDGE ROAD, SUITE 113
RALEIGH, NC 27612
PH: (919) 571-1111

SEAL: NORTH CAROLINA PROFESSIONAL CORPORATION — IMEG CONSULTANTS CORP. No. F-1507

SEAL: 10/15/2024 — NORTH CAROLINA PROFESSIONAL SEAL 051195 ENGINEER PATRICK J. KICARD

GENERAL NOTES

KEY PLAN

SCO ID #23-26923-01A

NO	REVISION	DATE

JKF ARCHITECTURE
625 LYNNDALE CT., SUITE F, GREENVILLE, NC 27858 252-355-1068

CRAVEN COMMUNITY COLLEGE
CORPORATE TRAINING CENTER
NEW BERN, NC

DRAWING TITLE: MECHANICAL PLAN

SCALE: 1/8" = 1'-0"	DRAWING NO: M1.1
DRAWN: PJM	
CHECKED: PJM	
DATE: 9-1-2024	
PROJECT NO.: 2023-09	

© COPYRIGHT, JKF ARCHITECTURE PC., JOHN K. FAIRKAS, AIA

23052

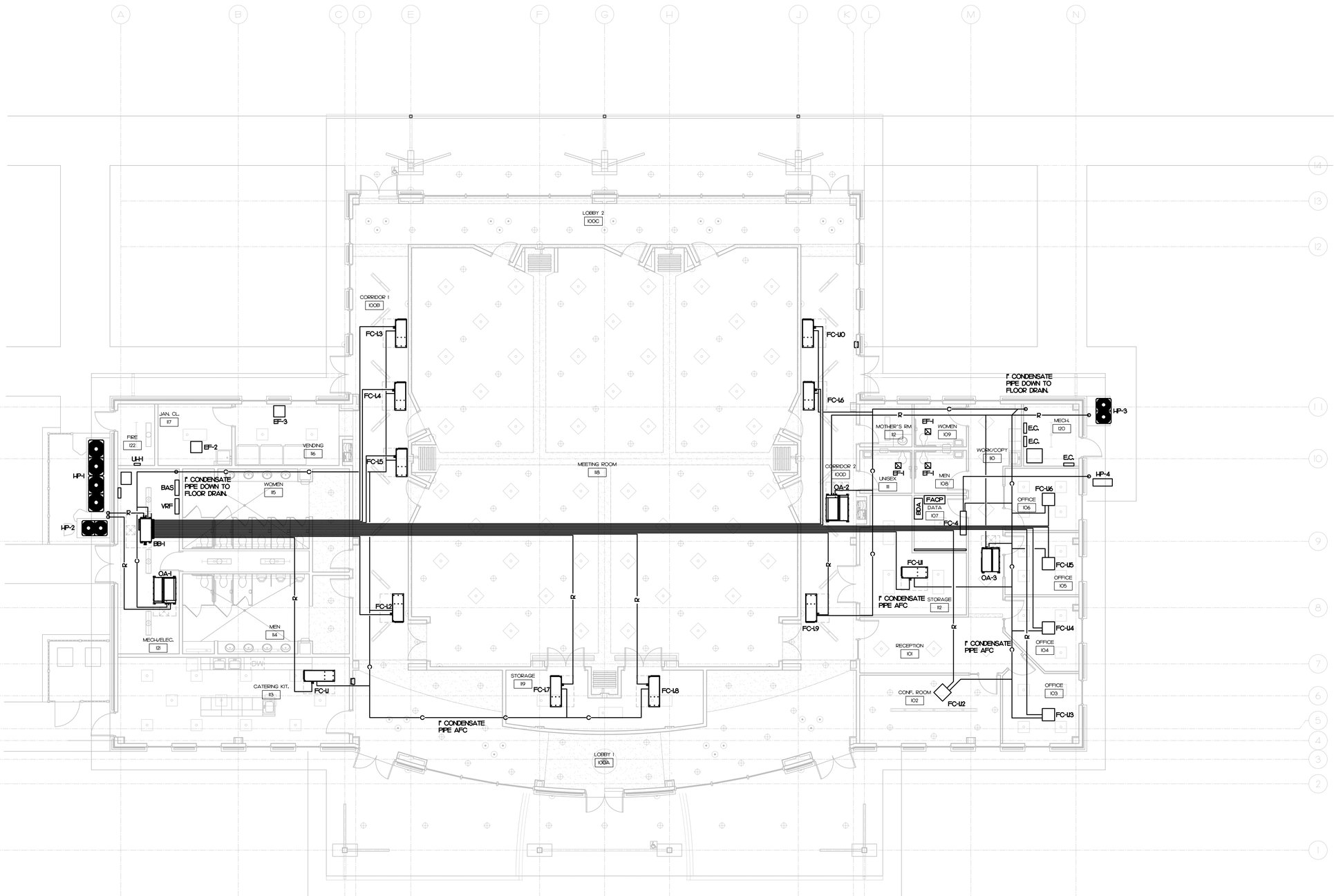

N

0 4' 8' 16'

SCALE: 1/8" = 1'-0"

MECHANICAL PIPING PLAN A15

SCALE: 1/8" = 1'-0"

230052

ATLANTEC ENGINEERS, PA 23052
now IMEG
3221 BLUE RIDGE ROAD, SUITE 113
RALEIGH, NC 27612
PH: (919) 571-1111

SEAL

NORTH CAROLINA PROFESSIONAL CORPORATION
IMEG CONSULTANTS CORP.
No. F-1507

SEAL

10/15/2024

NORTH CAROLINA PROFESSIONAL
SEAL 051195
ENGINEER
PATRICK J. MCCABE

GENERAL NOTES

KEY PLAN

SCO ID #23-26923-01A

NO	REVISION	DATE

JKF ARCHITECTURE
625 LYNNDALE CT., SUITE F, GREENVILLE, NC 27858 252-355-1068

CRAVEN COMMUNITY COLLEGE
CORPORATE TRAINING CENTER
NEW BERN, NC

DRAWING TITLE
MECHANICAL PIPING PLAN

SCALE	1/8" = 1'-0"
DRAWN	PJM
CHECKED	PJM
DATE	9-1-2024
PROJECT NO.	2023-09
DRAWING NO	M2.1

COPYRIGHT, JKF ARCHITECTURE PC, JOHN K. FARKAS, AIA

SPLIT SYSTEM HEAT PUMP SCHEDULE

INSIDE UNIT				OUTSIDE UNIT								
MARK	BASIS OF DESIGN	FAN CFM	FAN F.L.A.	MARK	BASIS OF DESIGN	COOLING / HEATING CAPACITY	ELECTRICAL POWER	ELECTRICAL MCA	ELECTRICAL MOCP	EFFICIENCY COOLING	EFFICIENCY HEATING	NOTES
FC-4	MITSUBISHI PKA-A24KA7	700	0.36	HP-4	MITSUBISHI PUZ-A24NHA7	24.0 MBH	208/1	19	25	21.4 SEER	11.0 HSPF	1-5

EQUALS BY TRANE, DAIKIN, SAMSUNG, CARRIER

NOTES:
1. PROVIDE FUSIBLE DISCONNECT ON OUTDOOR UNIT.
2. PROVIDE MOTOR RATED SWITCH FOR INDOOR UNIT.
3. PROVIDE WITH CONDENSATE PUMP AND ROUTE DISCHARGE TO FLOOR DRAIN BY P.C. AS REQUIRED.
4. PROVIDE WITH WIRED THERMOSTAT.
5. PROVIDE WITH LOW AMBIENT CONTROLS DOWN TO 0°F.

HEAT RECOVERY UNIT SCHEDULE

MARK	BASIS OF DESIGN	CAPACITY TOTAL	CAPACITY SENSIBLE	HEATING CAPACITY	ELECTRICAL POWER	ELECTRICAL MCA	ELECTRICAL MOCP	EFFICIENCY COP	EFFICIENCY EER	NOTES
HP-1	MITSUBISHI PURY-P336	336.0 MBH	262.0 MBH	378.0 MBH	460/3	32+32	50+50	3.2	9.9	1-6

EQUALS BY TRANE, DAIKIN, SAMSUNG, CARRIER

NOTES:
1. PROVIDE WITH HEAVY DUTY FUSIBLE DISCONNECT FOR OUTDOOR UNITS FOR ALL MODULES PER MANUFACTURER'S INSTALLATION INSTRUCTIONS.
2. PROVIDE WITH LOW AMBIENT CONTROLS FOR OPERATION DOWN TO 23 DEGREES FAHRENHEIT.
3. CONTROL VIA VRF SMART CONTROLLER WITH BACNET INTERFACE.
4. SEE SHEET M4.1 FOR REFRIGERANT PIPING INFORMATION.
5. PROVIDE WITH SALT SPRAY COATING.
6. REFRIGERANT TO BE R-410A.

HEAT PUMP UNIT SCHEDULE

MARK	BASIS OF DESIGN	CAPACITY TOTAL	CAPACITY SENSIBLE	HEATING CAPACITY	ELECTRICAL POWER	ELECTRICAL MCA	ELECTRICAL MOCP	EFFICIENCY COP	EFFICIENCY EER	NOTES
HP-2	MITSUBISHI PUHT-P96	96.0 MBH	72.0 MBH	108.0 MBH	460/3	18	25	4.0	13.8	1-6
HP-3	MITSUBISHI PUHY-P144	144.0 MBH	110.8 MBH	160.0 MBH	460/3	33	50	3.7	10.5	1-6

EQUALS BY TRANE, DAIKIN, SAMSUNG, CARRIER

NOTES:
1. PROVIDE WITH HEAVY DUTY FUSIBLE DISCONNECT ON OUTDOOR UNITS FOR ALL MODULES PER MANUFACTURER'S INSTALLATION INSTRUCTIONS.
2. PROVIDE WITH LOW AMBIENT CONTROLS FOR OPERATION DOWN TO 0 DEGREES FAHRENHEIT.
3. CONTROL VIA VRF SMART CONTROLLER WITH BACNET INTERFACE.
4. SEE SHEET M4.1 FOR REFRIGERANT PIPING INFORMATION.
5. PROVIDE WITH SALT SPRAY COATING.
6. REFRIGERANT TO BE R-410A.

ELECTRIC UNIT HEATER SCHEDULE

MARK	BASIS OF DESIGN	LOCATION	CFM	CAPACITY (Btuh)	ELECTRICAL (A)	ELECTRICAL (kW)	ELECTRICAL POWER	NOTES
UH-1	QMARK QWH1I0DSF	RISER	100	3,400	8.3	1.0	120/1	1-3

EQUALS BY BERKO, MARKEL, DAYTON

NOTES:
1. PROVIDE WITH POWER DISCONNECT.
2. PROVIDE WITH INTEGRAL THERMOSTAT.
3. PROVIDE WITH SURFACE MOUNTING KIT

BRANCH BOX SCHEDULE

BRANCH BOX MARK	BASIS OF DESIGN	CAPACITY	ELECTRICAL POWER	ELECTRICAL MCA	ELECTRICAL MOCP	FAN COIL MARK	NOTES
BB-1	MITSUBISHI CMB-P108NU-JA1	336 MBH	208/1	1.6	20	FC-1.1	1-5
						FC-1.2	
						FC-1.3	
						FC-1.4	
						FC-1.5	
						FC-1.6	
						FC-1.7	
						FC-1.8	
						FC-1.9	
						FC-1.10	
						FC-1.11	
						FC-1.12	
						FC-1.13	
						FC-1.14	
						FC-1.15	
						FC-1.16	

EQUALS BY TRANE, DAIKIN, SAMSUNG, CARRIER

NOTES:
1. PROVIDE WITH DISCONNECT SWITCH.
2. PROVIDE WITH CONDENSATE DRAIN FOR MULTIPORT BOX WITH CONDENSATE PUMP, ROUTE DISCHARGE TO FLOOR DRAIN BY P.C. AS REQUIRED.
3. SEE PIPING SCHEMATIC FOR ADDITIONAL PIPING DETAILS.
4. UNUSED PORTS SHALL BE CAPPED FOR FUTURE USE.
5. REFRIGERANT TO BE R-410A.

FAN COIL SCHEDULE

MARK	BASIS OF DESIGN	FAN CFM	FAN S.P.	CAPACITY TOTAL	CAPACITY SENSIBLE	HEATING CAPACITY	ELECTRICAL POWER	ELECTRICAL MCA	ELECTRICAL MOCP	NOTES
FC-1.1	MITSUBISHI PVFY-P54	1500	0.8"	54.0 MBH	40.5 MBH	60.0 MBH	208/1	5.6	15	1-6
FC-1.2	MITSUBISHI PVFY-P36	1100	0.8"	36.0 MBH	27.0 MBH	40.0 MBH	208/1	4.1	15	1-6
FC-1.3	MITSUBISHI PVFY-P54	1500	0.8"	54.0 MBH	40.5 MBH	60.0 MBH	208/1	5.6	15	1-6
FC-1.4	MITSUBISHI PVFY-P36	1100	0.8"	36.0 MBH	27.0 MBH	40.0 MBH	208/1	4.1	15	1-6
FC-1.5	MITSUBISHI PVFY-P36	1100	0.8"	36.0 MBH	27.0 MBH	40.0 MBH	208/1	4.1	15	1-6
FC-1.6	MITSUBISHI PVFY-P36	1100	0.8"	36.0 MBH	27.0 MBH	40.0 MBH	208/1	4.1	15	1-6
FC-1.7	MITSUBISHI PVFY-P48	1400	0.8"	48.0 MBH	36.0 MBH	54.0 MBH	208/1	5.6	15	1-6
FC-1.8	MITSUBISHI PVFY-P48	1400	0.8"	48.0 MBH	36.0 MBH	54.0 MBH	208/1	5.6	15	1-6
FC-1.9	MITSUBISHI PVFY-P36	1100	0.8"	36.0 MBH	27.0 MBH	40.0 MBH	208/1	4.1	15	1-6
FC-1.10	MITSUBISHI PVFY-P54	1500	0.8"	54.0 MBH	40.5 MBH	60.0 MBH	208/1	5.6	15	1-6
FC-1.11	MITSUBISHI PVFY-P24	750	0.8"	24.0 MBH	18.0 MBH	27.0 MBH	208/1	3.0	15	1-6
FC-1.12	MITSUBISHI PLFY-P15	300	-	15.0 MBH	11.3 MBH	17.0 MBH	208/1	0.4	15	1-6
FC-1.13	MITSUBISHI PLFY-P08	300	-	8.0 MBH	6.0 MBH	9.0 MBH	208/1	0.3	15	1-6
FC-1.14	MITSUBISHI PLFY-P05	250	-	5.0 MBH	3.7 MBH	5.6 MBH	208/1	0.24	15	1-6
FC-1.15	MITSUBISHI PLFY-P05	250	-	5.0 MBH	3.7 MBH	5.6 MBH	208/1	0.24	15	1-6
FC-1.16	MITSUBISHI PLFY-P05	250	-	5.0 MBH	3.7 MBH	5.6 MBH	208/1	0.24	15	1-6
OA-1	MITSUBISHI PEFY-P96-OA	1200	1.0"	96.0 MBH	72.0 MBH	57.0 MBH	208/1	4.8	15	1-5,7,8
OA-2	MITSUBISHI PEFY-P96-OA	1200	1.0"	96.0 MBH	72.0 MBH	57.0 MBH	208/1	4.8	15	1-5,7,8
OA-3	MITSUBISHI PEFY-P48-OA	600	1.0"	48.0 MBH	36.9 MBH	28.0 MBH	208/1	3.3	15	1-5,7,8

EQUALS BY TRANE, DAIKIN, SAMSUNG, CARRIER

NOTES:
1. PROVIDE WITH MOTOR RATED DISCONNECT SWITCH.
2. SEE OUTSIDE AIR SUMMARY FOR OUTSIDE AIR INTAKE FLOW SETTINGS.
3. PROVIDE WITH 1/30 HP CONDENSATE PUMP WITH INTEGRAL OVERLOAD PROTECTION AND ROUTE CONDENSATE TO FLOOR DRAIN BY P.C. AS REQUIRED.
4. PROVIDE WITH WALL MOUNTED THERMOSTAT FOR CONTROL VIA VRF SMART CONTROLLER AND BAS.
5. PROVIDE INDOOR COIL COATING TO PROTECT FROM SALT SPRAY.
6. PROVIDE WITH 1" FILTER RACK AND MERV 8 FILTER.
7. PROVIDE WITH 2" PLEATED MERV 13 FILTER RACK AND FILTER.
8. PROVIDE WITH MANUAL BALANCING DAMPER ON INLET SIDE OF UNIT TO CONTROL STATIC PRESSURE.
9. EAT FOR 100% OUTSIDE AIR UNITS TO BE 95°F IN SUMMER AND 22°F IN WINTER. EAT FOR FAN COIL UNITS TO BE 74°F IN SUMMER AND 65°F IN WINTER.

GRILLE & DIFFUSER SCHEDULE

MARK	BASIS OF DESIGN	SERVICE	TYPE	MAX. CFM	FACE SIZE	NECK SIZE	NOTES
A	PRICE SCD 4 CONE	SUPPLY	LOUVERED LAY-IN	100	24X24	6"Ø	1-3
B	PRICE SCD 4 CONE	SUPPLY	LOUVERED LAY-IN	200	24X24	8"Ø	1-3
C	PRICE SCD 4 CONE	SUPPLY	LOUVERED LAY-IN	300	24X24	10"Ø	1-3
D	PRICE 510	SUPPLY	SIDEWALL	100	14X6	12X4	1-5
RA	PRICE 530	RETURN	LOUVERED LAY-IN	1500	24X24	SEE DWG	1-3
EA	PRICE 530	EXHAUST	LOUVERED LAY-IN	1000	24X24	SEE DWG	1-3

EQUALS BY TITUS, KRUEGER, METALAIRE

NOTES:
1. COORDINATE FINISH WITH ARCHITECT.
2. GRILLE TO HAVE FULLY LOUVERED FACE.
3. PROVIDE WITH INSULATED SHEET METAL PLENUM.
4. FRAME FOR SURFACE MOUNTING.
5. PROVIDE WITH OPPOSED BLADE DAMPER.

EXHAUST FAN SCHEDULE

MARK	BASIS OF DESIGN	SERVICE	TYPE	CFM	RPM	HP/AMPS	S.P.	POWER	NOTES
EF-1	COOK GC-140	TOILET	CABINET FAN	105	1500	67 Watts	0.25"	277/1	1-3
EF-2	COOK 120 SQN-B	GANG TLTS	INLINE FAN	1000	1725	1/4 HP	0.5"	120/1	1,2,4
EF-3	COOK 120 SQN-D	BLDG PRESSURE	INLINE FAN	1000	1725	1/4 HP	0.5"	120/1	1,2,5,6,7

EQUALS BY GREENHECK, TCF, PENN BERRY

NOTES:
1. PROVIDE WITH DISCONNECT SWITCH.
2. PROVIDE WITH BACKDRAFT DAMPER.
3. CONTROL VIA LIGHT SWITCH BY E.C.
4. CONTROL VIA BAS BY TIME OF DAY OR OCCUPANCY SCHEDULE BY OWNER.
5. CONTROL VIA 0-10VDC PRESSURE CONTROLLER EQUAL TO COOK VFPC TO CONTROL BUILDING PRESSURE.
6. PROVIDE WITH 120V TO 24V TRANSFORMER.
7. FAN SHALL HAVE EC MOTOR.

NOTE:

INSTALL PIPING IN STRICT ACCORDANCE WITH MANUFACTURERS INSTRUCTIONS. CONTRACTOR MUST BE FACTORY TRAINED TO INSTALL EQUIPMENT. CONTRACTOR SHALL INCLUDE FACTORY START-UP AND FIELD SUPERVISION OF INSTALL BY QUALIFIED FACTORY TECHNICIAN. SEE SHEET M4.1 FOR PIPING AND ELECTRICAL WIRING.

EQUAL SYSTEMS BY TRANE, CARRIER, AND DAIKIN ARE ACCEPTABLE. CONTRACTOR IS RESPONSIBLE FOR ALTERNATE SYSTEM DESIGN OF PIPING AND ELECTRICAL CONNECTIONS IF DIFFERENT FROM THESE DOCUMENTS. CONTRACTOR SHALL PROVIDE PROOF OF SUCCESSFUL INSTALLATION AND TRAINING WITH SUBMITTALS.

ATLANTEC ENGINEERS, PA 29052
now IMEG
3221 BLUE RIDGE ROAD, SUITE 113
RALEIGH, NC 27612
PH: (919) 571-1111

SEAL: NORTH CAROLINA PROFESSIONAL CORPORATION — IMEG CONSULTANTS CORP. No. F-1507

SEAL 10/15/24: NORTH CAROLINA PROFESSIONAL SEAL 051195 ENGINEER PATRICK J. MCCARTHY

GENERAL NOTES

KEY PLAN

SCO ID #23-26923-01A

NO	REVISION	DATE

JKF ARCHITECTURE
625 LYNNDALE CT., SUITE F, GREENVILLE, NC 27858 252-355-1068

CRAVEN COMMUNITY COLLEGE
CORPORATE TRAINING CENTER
NEW BERN, NC

DRAWING TITLE: MECHANICAL SCHEDULES

SCALE	DRAWING NO
1/8" = 1'-0"	M3.1
DRAWN: PJM	
CHECKED: PJM	
DATE: 9-1-2024	
PROJECT NO.: 2023-09	

© COPYRIGHT, JKF ARCHITECTURE PC, JOHN K. FARKAS, AIA

23092

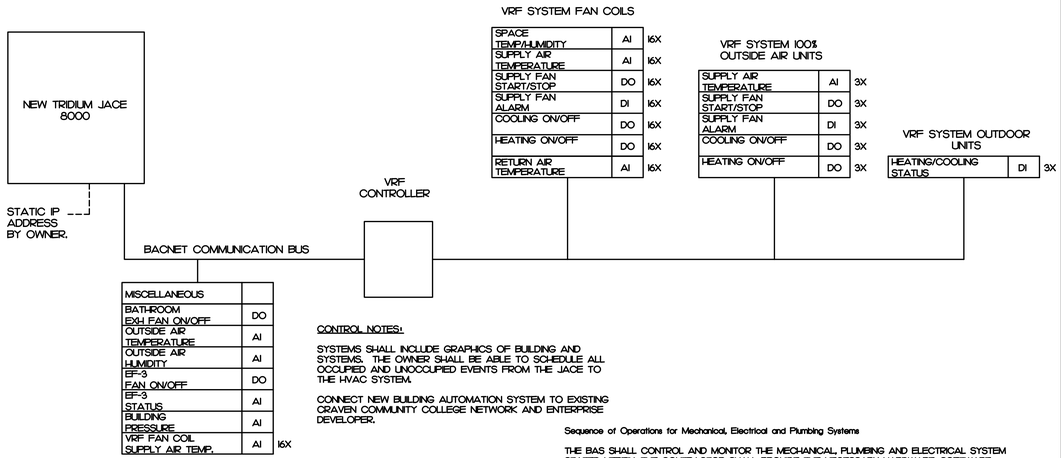

CONTROL NOTES:

SYSTEMS SHALL INCLUDE GRAPHICS OF BUILDING AND SYSTEMS. THE OWNER SHALL BE ABLE TO SCHEDULE ALL OCCUPIED AND UNOCCUPIED EVENTS FROM THE JACE TO THE HVAC SYSTEM.

CONNECT NEW BUILDING AUTOMATION SYSTEM TO EXISTING CRAVEN COMMUNITY COLLEGE NETWORK AND ENTERPRISE DEVELOPER.

CONTROLS SCHEMATIC A8

NOT TO SCALE

Sequence of Operations for Mechanical, Electrical and Plumbing Systems

THE BAS SHALL CONTROL AND MONITOR THE MECHANICAL, PLUMBING AND ELECTRICAL SYSTEM STATED HEREIN. THE CONTRACTOR SHALL PROVIDE THE NECESSARY HARDWARE, SOFTWARE, SENSORS, WIRING, ETC. FOR A COMPLETE AND OPERATIONAL SYSTEM TO THE SATISFACTION OF THE OWNER AND ENGINEER. THIS WILL INCLUDE GRAPHICS. THE OWNER SHALL BE THE LICENSE HOLDER FOR ALL SOFTWARE TO BE USED ON SITE.

Mechanical:

VRF SYSTEM (AIR HANDLERS)

A. OCCUPIED MODE:

1. THE AIR HANDLING UNIT SUPPLY FAN SHALL BE STARTED AND STOPPED BY THE ENERGY MANAGEMENT SYSTEM UNDER A TIME OF DAY SCHEDULE. THIS SCHEDULE SHALL BE MODIFIED BY AN START STOP OPTIMIZATION PROGRAM THROUGH THE VRF CONTROLLER.

2. DURING OCCUPANCY, UPON PROOF OF AIR FLOW THRU THE SUPPLY FAN THE NORMALLY CLOSED OUTSIDE AIR DAMPER SHALL BE ENABLED.

3. THE SUPPLY AIR TEMPERATURE SHALL BE RESET FROM 55° F TO 70° F AS THE OUTDOOR TEMPERATURE CHANGES FROM 70° F TO 30° F.

4. SMOKE DETECTION & AHU SHUTDOWN: THE BUILDING FIRE ALARM SYSTEM SHALL PROVIDE AN AHU SHUT DOWN SIGNAL TO EACH AHU. THE BUILDING FIRE ALARM SYSTEM SHALL PROVIDE ONE DIGITAL OUTPUT TO THE BAS TO INDICATE ALARM CONDITION. WIRING FOR THIS ALARM POINT SHALL BE PROVIDED BY THE BAS SUBCONTRACTOR.

5. VENTILATION CYCLES: DURING THE OCCUPIED PERIOD THE 100% OUTSIDE AIR UNIT SHALL BE ENABLED AND DAMPER SHALL BE SET IN THE OPEN POSITION. THE OUTDOOR AIR DAMPER SHALL REMAIN CLOSED DURING UNOCCUPIED PERIODS, UNOCCUPIED LOW/HIGH LIMIT CONDITIONS, AND PRESTART PERIODS.

6. COOLING/HEATING SHALL BE INDEXED TO MAINTAIN SETPOINT.

B. UNOCCUPIED MODE:

1. THE AIR HANDLING UNIT SHALL BE DISABLED UNLESS ANY OF THE ASSOCIATED SPACE TEMPERATURE DROPS BELOW THE UNOCCUPIED LOW LIMIT SETPOINT OR RISES ABOVE THE UNOCCUPIED HIGH LIMIT. WHEN THE TEMPERATURE DROPS BELOW THE UNOCCUPIED LOW LIMIT SETPOINT OR RISES ABOVE THE UNOCCUPIED HIGH LIMIT, THE UNIT SHALL OPERATE IN PREPARATORY MODE.

2. WHEN THE UNIT IS DISABLED, THE SUPPLY FAN IS OFF, THE OUTDOOR AIR DAMPERS AND RELIEF AIR DAMPERS ARE CLOSED. THE RETURN AIR DAMPERS ARE OPEN.

IN ADDITION TO THE SEQUENCE NOTED ABOVE THE ENERGY MANAGEMENT SYSTEM SHALL MONITOR THE FOLLOWING DIGITAL AND ANALOG INPUT POINTS:

1. SUPPLY TEMPERATURE
2. MIXED AIR TEMPERATURE
3. SUPPLY FAN ON/OFF
4. SUPPLY FAN FAULT
5. CONDENSING UNIT STAGES
6. CONDENSING UNIT FAULT

VRF 100% OUTSIDE AIR UNIT

1. OUTSIDE AIR UNITS SHALL BE ENABLE TO SUPPLY MEETING ROOM (OA-1 AND OA-2) WHEN "MEETING" OCCUPIED SCHEDULE OR CO2 SENSORS ARE ACTIVATED. "MEETING" SCHEDULE TO BE DETERMINED BY OWNER VIA BAS. OA-1 AND OA-2 TO BE INTERLOCKED WITH EF-1 OPERATION BASED ON OCCUPANCY.

2. DURING "OFFICE" OCCUPIED HOURS, OA-3 SHALL RUN AND DISCHARGE AIR SET TO DELIVER 55°F. SUPPLY AIR SHALL BE RESET.

3. THE SUPPLY AIR TEMPERATURE SHALL BE RESET FROM 55° F TO 70° F AS THE OUTDOOR TEMPERATURE CHANGES FROM 70° F TO 30° F. THE DX COOLING STAGES AND ECONOMIZER DAMPERS SHALL BE SEQUENCED TO ACHIEVE SETPOINT.

BAS OVERRIDE

ACTIVATION OF THE OVERRIDE PUSH-BUTTON AT THE WALL MOUNTED TEMPERATURE SENSOR WILL SWITCH AN AIR HANDLING UNIT CONTROL SEQUENCE FROM THE UNOCCUPIED TO THE OCCUPIED MODE FOR A PROGRAMMABLE TIME PERIOD. THE INITIAL SET UP TIME PERIOD SHALL BE TWO HOURS.

EF-2 SHALL RUN WHEN OCCUPIED FOR "MEETING" OR CO2 SENSOR.

EF-3 SHALL ENABLE WHEN BUILDING PRESSURE EXCEEDS 0.05" W.C.

CONTROL NOTES

1. ALL CONTROL WIRING SHALL BE ROUTED IN CONDUIT IN MECHANICAL ROOMS AND WHERE CONCEALED IN WALLS. WIRING ROUTED ABOVE CEILING MAY BE PLENUM RATED AND STRAPPED TO PIPE OR STRUCTURE. PROVIDE YELLOW MARKING ON CONTROL CONDUIT EVERY 15 FT MAXIMUM IN MECHANICAL ROOMS AND ABOVE CEILINGS.
2. J-BOX COVERS ABOVE CEILING AND IN MECHANICAL ROOMS SHALL BE PAINTED YELLOW WITH TYPE WRITTEN "BAS" LABEL.
3. CONTROL CONTRACTOR TO PROVIDE 3 YEAR SERVICE AGREEMENT.
4. ALL TEMPERATURE SENSORS TO HAVE PUSH-BUTTON TEMPERATURE DISPLAY, SET-POINT ADJUSTMENT AND OVERRIDE.
5. THE CONTRACTOR SHALL HAVE MEETING WITH OWNER PRIOR TO ANY PROGRAMMING TO CONFIRM POINTS NAMING FOR THIS PROJECT.

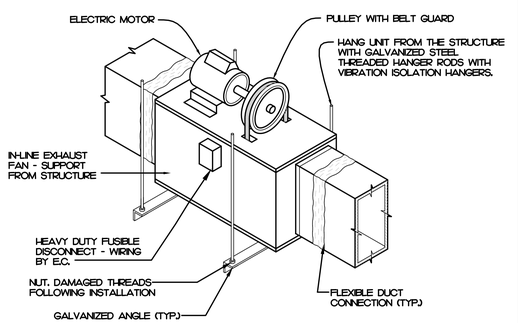

IN LINE FAN DETAIL J11

NOT TO SCALE

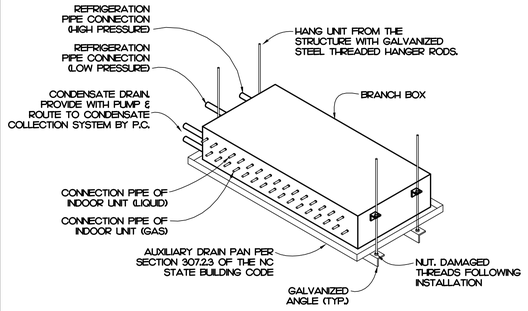

NOTE:
PROVIDE WITH OVERFLOW FLOAT SWITCH. THE M.C. SHALL WIRE TO SHUT DOWN FAN.

BRANCH BOX DETAIL J15

NOT TO SCALE

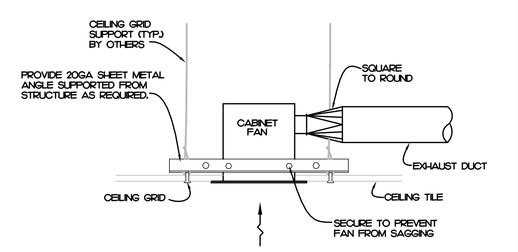

CABINET FAN DETAIL E11

NOT TO SCALE

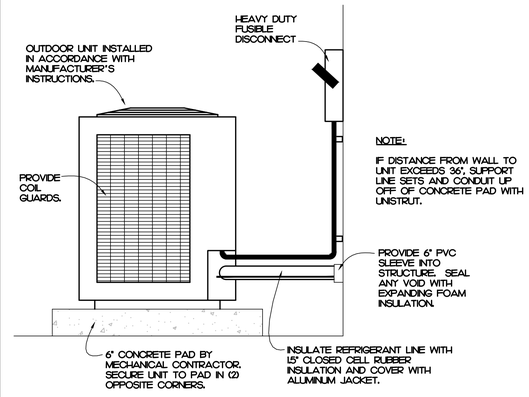

OUTDOOR UNIT DETAIL E15

NOT TO SCALE

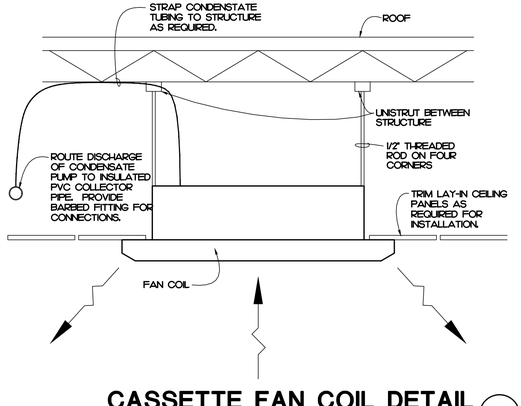

CASSETTE FAN COIL DETAIL A11

NOT TO SCALE

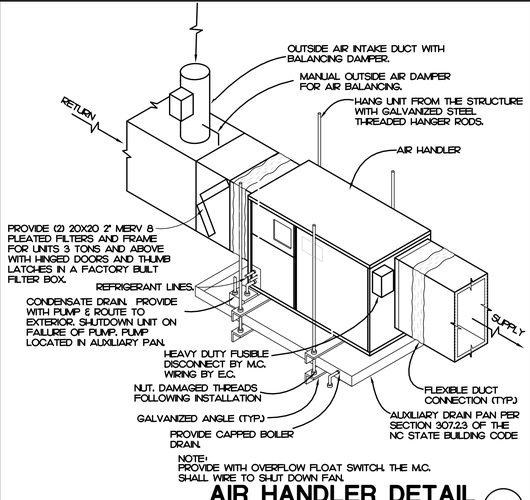

NOTE:
PROVIDE WITH OVERFLOW FLOAT SWITCH. THE M.C. SHALL WIRE TO SHUT DOWN FAN.

AIR HANDLER DETAIL A15

NOT TO SCALE

ATLANTEC ENGINEERS, PA 29052
now IMEG
3221 BLUE RIDGE ROAD, SUITE 113
RALEIGH, NC 27612
PH: (919) 571-1111

SEAL: NORTH CAROLINA PROFESSIONAL CORPORATION — IMEG CONSULTANTS CORP. No. F-1507

SEAL: 10/15/24 — NORTH CAROLINA PROFESSIONAL — SEAL 051195 — ENGINEER — PATRICK J. MCCARTHY

GENERAL NOTES

KEY PLAN

SCO ID #23-26923-01A

NO	REVISION	DATE

JKF ARCHITECTURE
625 LYNNDALE CT., SUITE F, GREENVILLE, NC 27858 252-355-1068

CRAVEN COMMUNITY COLLEGE
CORPORATE TRAINING CENTER
NEW BERN, NC

DRAWING TITLE: MECHANICAL DETAILS

SCALE: 1/8" = 1'-0"	DRAWING NO: M4.1
DRAWN: PJM	
CHECKED: PJM	
DATE: 9-1-2024	
PROJECT NO.: 2023-09	

© COPYRIGHT, JKF ARCHITECTURE PC., JOHN K. FARKAS, AIA

23052

DIAGRAM SYMBOL LEGEND		CONTN	PAGE
DISPLAY	DESCRIPTION		
	POWER WIRE		
	CONTROL WIRE		
	REF. PIPE		

SYSTEM SCHEMATIC DWG.

Coded Notes:
NOTE 1) Install twinning Y's within 15 degrees of level and with 20 inches of straight pipe on converging connection - reference installation manual for additional details including but not limited to special trapping requirements when twinning, and pipe slope requirements

PIPING AND CONTROLS

SYMBOL	BRANCH PIPE MODEL NAME
J1	CMY-R300NC-BX
J2	CMY-R302S-G1
J3	Reducer
J4	CMY-Y102LS-G2

SYMBOL	MAIN PIPE/GAS PIPE SIZE
P1	7/8 /
P2	/ 1-1/8
P3	3/8 / 5/8
P4	1/4 / 1/2
P5	1-1/8 / 1-5/8
P6	3/8 / 7/8
P7	1/2 / 1-1/8

SYMBOL	MODEL NUMBER
CR	PAC-TIS0204U-J

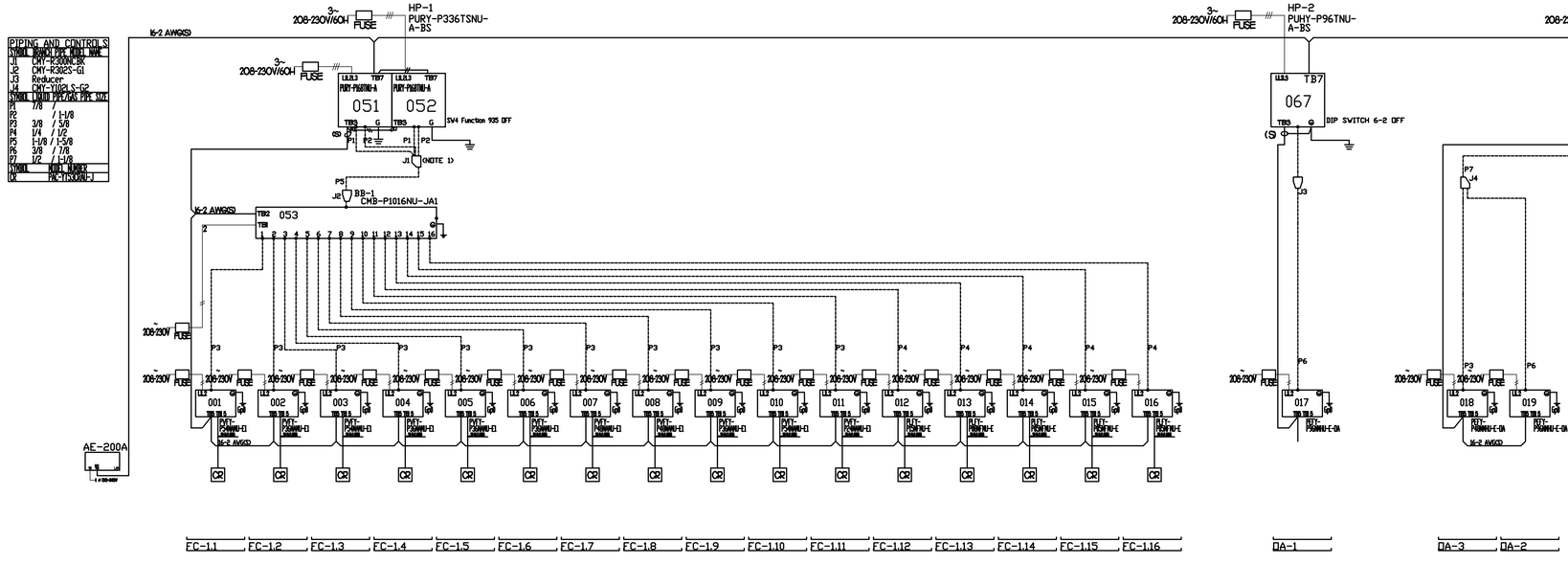

VRF SCHEMATIC

NOT TO SCALE

A15

23052

ATLANTEC ENGINEERS, PA 23052
now IMEG
3221 BLUE RIDGE ROAD, SUITE 113
RALEIGH, NC 27612
PH: (919) 571-1111

SEAL: NORTH CAROLINA PROFESSIONAL CORPORATION — IMEG CONSULTANTS CORP. No. F-1507

SEAL: 10/15/24 — NORTH CAROLINA PROFESSIONAL SEAL 051195 ENGINEER PATRICK J. MCCABE

GENERAL NOTES

KEY PLAN

SCO ID #23-26923-01A

NO	REVISION	DATE

JKF ARCHITECTURE
625 LYNNDALE CT., SUITE F, GREENVILLE, NC 27858 252-355-1068

CRAVEN COMMUNITY COLLEGE
CORPORATE TRAINING CENTER
NEW BERN, NC

DRAWING TITLE: VRF SCHEMATIC

SCALE	1/8" = 1'-0"
DRAWN	PJM
CHECKED	PJM
DATE	9-1-2024
PROJECT NO.	2023-09
DRAWING NO	M5.1

© COPYRIGHT, JKF ARCHITECTURE PC., JOHN K. FARKAS, AIA

SYMBOL LEGEND

SYMBOL	DESCRIPTION	REMARKS
	2 X 4 LAY-IN FIXTURE - LETTER DESIGNATES TYPE	SEE FIXTURE SCHED.
	2 X 2 LAY-IN FIXTURE - LETTER DESIGNATES TYPE	SEE FIXTURE SCHED.
	LINEAR SURFAACE/PENDANT FIXTURE - LETTER DESIGNATES TYPE	SEE FIXTURE SCHED.
	LINEAR WALL MOUNT FIXTURE - LETTER DESIGNATES TYPE	SEE FIXTURE SCHED.
	LINEAR STRIP FIXTURE - LETTER DESIGNATES TYPE	SEE FIXTURE SCHED.
	RECESSED CAN LIGHT FIXTURE - LETTER DESIGNATES TYPE	SEE FIXTURE SCHED.
	PENDANT/SURFACE MOUNT FIXTURE - LETTER DESIGNATES TYPE	SEE FIXTURE SCHED.
	EXTERIOR WALL LIGHT FIXTURE - LETTER DESIGNATES TYPE	SEE FIXTURE SCHED.
	EXISTING/RELOCATED LIGHT POLE SEE NOTE ON PLAN.	EXISTING
	EXTERIOR BOLLARD FIXTURE - LETTER DESIGNATES TYPE	SEE FIXTURE SCHED.
	EXIT LIGHT - CONNECT UNSWITCHED	SEE FIXTURE SCHED.
	BATTERY BACKUP EMERGENCY LIGHT - CONNECT UNSWITCHED	SEE FIXTURE SCHED.
	LIGHT FIXTURE ON UNSWITCHED CIRCUIT FOR NIGHT LIGHT. THE SHADE DESIGNATED THE NIGHT LIGHT.	SEE FIXTURE SCHED.
PC	PHOTOCELL, 105-305VAC, 50/60HZ, 1800VA BALLAST LOAD 1000W TUNGSTEN LOAD, 8A LED LOAD (UP TO 2220W @277V)	TORK, ZSS24 OR EQUAL
EP1	EMERGENCY POWER UNIT (INVERTER) FOR EMERGENCY LIGHT FIXTURES. 277V INPUT, 277V OUTPUT, 55W WITH 90 MIN. BACKUP TIME. SURFACE MOUNT WITH REMOTE TEST SWITCH	EELP, PSM-55-SD-S WITH PS-RTSP EQUAL, DUAL-LITE, MYERS, ACUITY
EP2	EMERGENCY POWER UNIT (INVERTER) FOR EMERGENCY LIGHT FIXTURES. 277V INPUT, 277V OUTPUT, 10W WITH 90 MIN BACKUP TIME. SURFACE MOUNT WITH REMOTE TEST SWITCH	EELP, PS-110-LP-S-SD WITH PS-RTS EQUAL, DUAL-LITE, MYERS, ACUITY
S	SINGLE POLE TOGGLE SWITCH. MOUNT TOP OF BOX TO 48" A.F.F. UNLESS NOTED OTHERWISE. SEE NOTE #4.	HUBBELL 1221-** WITH SI COVER PLATE
S_3	THREE WAY TOGGLE SWITCH. MOUNT TOP OF BOX TO 48" A.F.F. UNLESS NOTED OTHERWISE. SEE NOTE #4.	HUBBELL 1223-** WITH SI COVER PLATE
S_{MI}	WALL MOUNTED OCCUPANCY SENSOR SWITCH, PASSIVE INFRARED MOUNT TOP OF BOX TO 48" A.F.F. UNLESS NOTED OTHERWISE. SEE NOTE #4. 800W/120VAC OR 1200W/277VAC	SENSORSWITCH WSX-** S26 COVER PLATE
S_{M2}	WALL MOUNTED OCCUPANCY SENSOR SWITCH, DUAL TECHNOLOGIES. MOUNT TOP OF BOX TO 48" A.F.F. UNLESS NOTED OTHERWISE. SEE NOTE #4. 800W/120VAC OR 1200W/277VAC	SENSORSWITCH WSX-PDT-** S26 COVER PLATE
S_{MD}	WALL MOUNTED 0-10V DIMMING SWITCH WITH OCCUPANCY SENSOR. DUAL TECHNOLOGIES. 1000W/120VAC OR 1200W/277VAC MOUNT TOP OF BOX TO 48" A.F.F. UNLESS NOTED OTHERWISE. SEE NOTE #4, 6. PROVIDE SWITCHED WIRES AND 0-10V CONTROL WIRES TO FIXTURE AS REQUIRED.	SENSORSWITCH WSX-PDT-D-** S26 COVER PLATE
MI	CEILING MOUNTED OCCUPANCY SENSOR, INFRARED 800W/120VAC OR 1200W/277VAC, 12 FT. RADIUS	SENSORSWITCH CMR-9
M3	CEILING MOUNTED OCCUPANCY SENSOR, INFRARED LOW VOLTAGE. PROVIDE LOW VOLTAGE WIRING TO POWER PACK AS REQUIRED. 12 FT. RADIUS	SENSORSWITCH CM-9
M4	CEILING MOUNTED OCCUPANCY SENSOR, DUAL TECHNOLOGIES. LOW VOLTAGE. PROVIDE LOW VOLTAGE WIRING TO POWER PACK AS REQUIRED. 12 FT. RADIUS	SENSORSWITCH CM-PDT-9
MP	POWER PACK FOR LOW VOLTAGE OCCUPANCY SENSOR. 120/277VAC, 20A 1 POLE CONTACTOR.	SENSORSWITCH PP-20
S_D	DIMMING SWITCH WITH PRESET TO MATCH FIXTURE. 0-10V DIMMING. MOUNT TOP OF BOX TO 48" A.F.F. UNLESS NOTED OTHERWISE. SEE NOTE #4, 6. PROVIDE SWITCHED WIRES AND 0-10V CONTROL WIRES TO FIXTURE AS REQUIRED.	SENSORSWITCH SPDDMRA-D-** S26 COVER PLATE
S_{D3}	MULTI LOCATION DIMMING SWITCH WITH PRESET TO MATCH FIXTURE. 0-10V DIMMING. MOUNT TOP OF BOX TO 48" A.F.F. UNLESS NOTED OTHERWISE. SEE NOTE #4, 6. PROVIDE SWITCHED WIRES AND 0-10V CONTROL WIRES TO FIXTURE AS REQUIRED.	SENSORSWITCH SPDDMRA-MWO-D-** S26 COVER PLATE
	SPECIFICATION GRADE DUPLEX TAMPER RESISTANT RECEPTACLE. MOUNT BOTTOM OF BOX 16" A.F.F. UNLESS OTHERWISE NOTED. SEE NOTE #4.	HUBBELL HBL5362-**-TR WITH S8 COVER PLATE
GFCI	SPECIFICATION GRADE TAMPER RESISTANT GFCI RECEPTACLE MOUNT BOTTOM OF BOX 16" A.F.F. UNLESS OTHERWISE NOTED. SEE NOTE #4.	HUBBELL GFTRST20-** WITH S26 COVER PLATE
WP	SPECIFICATION GRADE TAMPER RESISTANT, WEATHER RESISTANT AND GFCI DUPLEX RECEPTACLE WITH IN-USE WEATHER PROOF METALLIC COVER. MOUNT BOTTOM OF BOX 16" A.F.F. UNLESS OTHERWISE NOTED. SEE NOTE #4.	HUBBELL GFTWRST20-** WITH WP26E COVER PLATE
EWC	SPECIFICATION GRADE DUPLEX RECEPTACLE FOR WATER COOLER. MOUNT 24" A.F.F. FOR CONCEALMENT OF CORD. FED FROM GFCI CIRCUIT BREAKER.	HUBBELL HBL5362 WITH S8 COVER PLATE
	SPECIFICATION GRADE DUPLEX TAMPER RESISTANT RECEPTACLE. MOUNT BOTTOM OF BOX 16" A.F.F. UNLESS OTHERWISE NOTED. SEE NOTE #4. FED FROM GFCI CIRCUIT BREAKER.	HUBBELL HBL5362-**-TR WITH S8 COVER PLATE
	SPECIFICATION GRADE QUAD TAMPER RESISTANT RECEPTACLE MOUNT BOTTOM OF BOX 16" A.F.F. UNLESS OTHERWISE NOTED. SEE NOTE #4.	HUBBELL (2) HBL5362-**-TR WITH S82 COVER PLATE
WP	SPECIFICATION GRADE TAMPER RESISTANT, WEATHER RESISTANT AND GFCI QUAD RECEPTACLE WITH IN-USE WEATHER PROOF METALLIC COVER. MOUNT BOTTOM OF BOX 16" A.F.F. UNLESS OTHERWISE NOTED. SEE NOTE #4.	HUBBELL (2) GFTWRST20-** WITH WP262E COVER PLATE
	4 GANG RECTANGLE RECESSED CONCRETE FLOOR BOX WITH ROUND COVER. 2 GANG WITH DUPLEX TAMPER RESISTANT RECEPTACLES. 1 GANG FOR RJ45 JACKS WITH 2 CAT 6 CABLES TO PATCH PANEL IN DATA 107. 1 GANG FOR SPARE. KO= 1" FOR POWER, 1 1/4" HUB FOR DATA. PROVIDE COVER TO MATCH FLOOR TYPE PER ARCHITECT INSTRUCTION.	HUBBELL: BOX= CFB4G30 COVER= CFB5352BCVR-** REC= (2) 5362TR-** + (2) FBMPDUP COMM= (2) RJ45 + (1) FBMP6KS SPARE= (1) FBMPBNK
J	JUNCTION BOX SIZED PER N.E.C.	
	DISCONNECT SWITCH SEE PLANS FOR SIZE AND TYPE HEAVY DUTY	SEE SPECIFICATION
S_{EQ}	SINGLE POLE TOGGLE SWITCH FOR EQUIPMENT DISCONNECT MOUNT ADJACENT TO EQUIPMENT.	HUBBELL 1221-** WITH METAL COVER PLATE
S_{EQ2}	TWO POLE TOGGLE SWITCH FOR EQUIPMENT DISCONNECT MOUNT ADJACENT TO EQUIPMENT.	HUBBELL 1222-** WITH METAL COVER PLATE
	NEW CONCEALED WIRING	PER N.E.C.
	LOW VOLTAGE WIRING FOR OCCUPANCY SWITCH AND POWER PACK.	PER N.E.C.
	UNSWITCHED LIGHTING CONDUCTOR	PER N.E.C.
	HOME RUN TO PANEL BOARD NUMBERS OF ARROW INDICATE CIRCUITS	PER N.E.C.
	120/208V 3Ø, 4W PANEL BOARD SEE PANEL SCHEDULES	SEE SPECIFICATION
	277/480V 3Ø, 4W PANEL BOARD SEE PANEL SCHEDULES	SEE SPECIFICATION
TF	DRY TYPE DISTRIBUTION TRANSFORMER. SEE POWER RISER	SEE SPECIFICATION

SYMBOL	DESCRIPTION	REMARKS
	2 PORT COMMUNICATION OUTLET. MOUNT BOTTOM OF BOX 16" A.F.F. UNLESS NOTHERWISE NOTED. SEE NOTE #4. STUB 1" CONDUIT TO ACCESSIBLE CEILING SPACE. 2 RJ45 JACKS WITH 2 CAT 6 CABLES TO PATCH PANEL IN DATA 107. SEE DETAIL A8/E5.1	HUBBELL, 2 RJ45 JACKS NS62-** FRAME, S26 COVER PLATE
PJL	COMMUNICATION OUTLET AT PROJECTOR LIFT MOUNT TO PROJECTOR LIFT. 1 RJ45 JACKS WITH 1 CAT 6 CABLES TO PATCH PANEL IN DATA 107. SEE DETAIL A8/E5.1	HUBBELL, 1 RJ45 JACK NS61-** FRAME, S26 COVER PLATE
ENS	ENS OUTLET AT CEILING PANEL 2 RJ45 BISCUIT JACKS WITH 2 CAT 6 CABLES TO PATCH PANEL IN DATA 107. LEAVE 10 FT. SLAG CABLES AT REQUIRED LOCATION. SEE DETAIL A8/E5.1	2-RJ45 BISCUIT JACKS
WAP	WIFI ACCESS OUTLET AT CEILING PANEL 1 RJ45 BISCUIT JACK WITH 1 CAT 6 CABLE TO PATCH PANEL IN DATA 107. LEAVE 10 FT. SLAG CABLE AT REQUIRED LOCATION. SEE DETAIL A8/E5.1	1-RJ45 BISCUIT JACK
CM	CEILING MOUNTED POE SECURITY CAMERA 1 RJ45 BISCUIT JACK WITH 1 CAT 6 CABLE TO PATCH PANEL IN DATA 107. LEAVE 10 FT. SLAG CABLE AT REQUIRED LOCATION. SEE DETAIL A8/E5.1	1-RJ45 BISCUIT JACK
	WALL MOUNTED POE SECURITY CAMERA STUB 1" CONDUIT TO ACCESSIBLE CEILING OR ATTIC SPACE. 1 RJ45 BISCUIT JACK WITH 1 CAT 6 CABLE TO PATCH PANEL IN DATA 107. LEAVE 2 FT. SLAG CABLE AT OUTLET. FIELD VERIFY MOUNTING HEIGHT WITH ARCHITECT PRIOR TO ROUGH-IN. SEE DETAIL A8/E5.1	SINGLE GANG BOX 1-RJ45 BISCUIT JACKS SI3 COVER PLATE
SCR	SECURITY CARD READER MOUNT TOP OF BOX TO 48" A.F.F. UNLESS NOTED OTHERWISE. SEE NOTE #4. PROVIDE 3/4" CONDUIT TO J-BOX ABOVE SECURED DOOR. SEE DETAIL A8/E5.2, G8/E5.2 AND G15/E5.2 FOR INSTALLATION AND WIRING REQUIREMENT.	SINGLE GANG BOX SI3 COVER PLATE
SDL	SECURITY DOOR LOCK. SEE DETAIL A8/E5.2, G8/E5.2 AND G15/E5.2 FOR INSTALLATION AND WIRING REQUIREMENT.	
SDC	SECURITY DOOR CONTACT STUB 3/4" CONDUIT FROM DOOR FRAME TO ACCESSIBLE CEILING SPACE SEE DETAIL A5/E5.1 FOR WIRING REQUIREMENT.	
ADA	ADA DOOR PUSH BUTTON MOUNT 36" FROM CENTER OF PUSH BUTTON TO FINISHED FLOOR. SEE NOTE #4. E.C. TO INSTALL PER MANUFACTURER INSTRUCTION.	FURNISHED BY G.C. INSTALLED BY E.C.
MW	MOTORIZED WALL CONTROL SWITCH MOUNT TOP OF BOX TO 48" A.F.F. UNLESS NOTED OTHERWISE. SEE NOTE #4. EACH MOTORIZED WALL REQUIRES ONE CONTROL SWITCH ON EACH SIDE OF WALL. TWO SWITCHES ARE REQUIRED PER WALL.	FURNISHED BY G.C. INSTALLED BY E.C.
PJL	PROJECTOR LIFT CONTROL SWITCH MOUNT TOP OF BOX TO 48" A.F.F. UNLESS NOTED OTHERWISE. SEE NOTE #4.	FURNISHED BY G.C. INSTALLED BY E.C.
PJS	PROJECTOR SCREEN CONTROL SWITCH. MOUNT TOP OF BOX TO 48" A.F.F. UNLESS NOTED OTHERWISE. SEE NOTE #4.	FURNISHED BY G.C. INSTALLED BY E.C.
FACP	FIRE ALARM CONTROL PANEL, SURFACE MOUNTED. ADDRESSABLE.	SEE FIRE ALARM PLAN
BDA	BI-DIRECTIONAL ANTENNA SYSTEM	SEE FIRE ALARM PLAN
A.F.C.	ABOVE FINISHED CEILING	
A.F.F.	ABOVE FINISHED FLOOR - NOTE ALL MOUNTING DIMENSIONS GIVEN ARE TO THE BOTTOM OF THE OUTLET BOX	
B.F.F.	BELOW FINISHED FLOOR	
B.F.G.	BELOW FINISHED GRADE	

NOTE:

1. MANUFACTURERS AND PART NUMBERS SHOWN IN LEGEND ARE FOR GUIDELINE. EQUIVALENT PRODUCTS ARE ACCEPTABLE.
2. ON/OFF SWITCHES AND RECEPTACLE NOTES:
   - ** DEVICE COLOR SHALL BE WHITE.
   - ALL INDOOR DEVICES SHALL BE WITH STAINLESS PLATE COVERS.
   - ACCEPTABLE PRODUCTS BY: HUBBELL, LEGRAND, EATON, LEVITON.
3. DIMMING SWITCHES, LINE VOLTAGE OCCUPANCY SWITCHES AND LOW VOLTAGE OCCUPANCY CONTROL SHOWN ON THIS PLAN ARE FOR GUIDELINE.
   - ACCEPTABLE PRODUCTS BY: SENSORWORX, ACUITY BRAND, HUBBELL, LEGRAND, EATON, LEVITON.
4. FOR WALL MOUNTED DEVICES, SEE DETAIL H10/A8.1 FOR TYPICAL MOUNTING HEIGHT. CONFIRM MOUNITNG HEIGHT WITH ARCHITECT PRIOR TO START WORK.
5. LIGHTING CONTROL SYSTEM LEGENDS, SEE DETAIL G10/E5.1 AND G15/E5.1.
6. FOR ALL WIRING FROM 0-10V DIMMING SWITCH TO LIGHT FIXTURE NOTES:
   - SWITCHED WIRES ARE CONSIDERED LIGHT CIRCUIT.
   - 0-10V CONTROL WIRES ARE CONSIDERED CLASS 2 CIRCUIT.
     a. WIRING MAY RUN EXPOSED IN ACCESSIBLE CEILING SPACE.
     b. WIRING SHALL BE IN CONDUIT WHERE INSTALLED IN FURRED SPACE OR NOT-ACCESSIBLE AREA.
     c. CABLE SHALL BE PLENUM RATE.
   - BOTH CIRCUITS SHALL NOT BE IN THE SAME RACEWAY. SEE NEC 725.136.

GENERAL NOTES

1. THE CONTRACTOR SHALL REFER TO THE ARCHITECTURAL PLANS FOR FLOOR PLAN DIMENSIONS. DO NOT SCALE THESE DRAWINGS.
2. THE ELECTRICAL CONTRACTOR SHALL COORDINATE ANY AND ALL WORK WITH OTHER TRADES INVOLVED IN THE PROJECT, PRIOR TO THE INSTALLATION OF HIS EQUIPMENT SO AS TO AVOID CONFLICTS DURING CONSTRUCTION AND TO ALLOW FOR OPTIMUM MAINTENANCE AND WORKING SPACE.
3. USE OF THE CONDUIT SYSTEM FOR EQUIPMENT GROUNDING SHALL NOT BE ACCEPTABLE. A SEPARATE GREEN GROUND WIRE SHALL BE RUN WITH THE CIRCUIT CONDUCTORS IN EACH CONDUIT.
4. ALL BREAKER SIZES, SHOWN FOR MECHANICAL EQUIPMENT, SHALL BE VERIFIED BEFORE THE PURCHASE OR INSTALLATION OF SAID EQUIPMENT, WITH THE EQUIPMENT SUPPLIER AND THE MECHANICAL CONTRACTOR.
5. ALL WORK AND MATERIAL SHALL BE PROVIDED IN ACCORDANCE WITH THE STATE, LOCAL AND NATIONAL CODES, ORDINANCES AND 2020 NATIONAL ELECTRICAL CODE (NFPA 70).
6. EACH CONTRACTOR SHALL PROVIDE HIS OWN SUPPORT OF ALL DEVICES AND EQUIPMENT PROVIDED BY HIM AND SHALL SUPPORT SUCH EQUIPMENT PER APPROVED GOVERNING CODES OR PER APPROVAL OF THE ENGINEER. UNACCEPTABLE WORKMANSHIP OR MATERIALS SHALL BE REPLACED AT THE REQUEST OF THE ENGINEER AT THE CONTRACTOR'S EXPENSE.
7. THE MOUNTING HEIGHTS AND LOCATIONS OF ALL WALL MOUNTED OUTLETS AND JUNCTION BOXES SHALL BE REVIEWED AND COORDINATED WITH THE ARCHITECT, PRIOR TO INSTALLATION FOR USE WITH THE ACTUAL EQUIPMENT, CASEWORK, AND MILLWORK TO BE FURNISHED.
8. THE ELECTRICAL CONTRACTOR SHALL PROVIDE ALL NECESSARY DISCONNECTS, SWITCHES, AND RECEPTACLES UNDER THE ELECTRICAL BID AND SHALL INCLUDE ALL NECESSARY CIRCUITS TO AND FINAL CONNECTIONS TO THE EQUIPMENT PROVIDED BY ALL SUPPLIERS. SEE DETAILS FOR CONNECTION TO EQUIPMENT PROVIDED BY MECHANICAL AND PLUMBING CONTRACTORS
9. PENETRATION:
   - WHERE ELECTRICAL EQUIPMENT PENETRATES RATED WALLS AND CEILINGS, EXTERIOR WALLS, THEY SHALL BE PROPERLY SEALED PER APPROVED UL METHODS.
   - WHERE ELECTRICAL EQUIPMENT PENETRATES EXTERIOR WALLS, THEY SHALL BE PROPERLY SEALED WITH METHODS APPROVED BY THE ENGINEER. SUBMIT DETAIL OF PROPOSED SEALING METHODS.
10. ALL PERMITS AND INSPECTION FEES SHALL BE SECURED AND PAID BY THE ELECTRICAL CONTRACTOR.
11. ALL WORK SHALL BE PERFORMED BY A LICENSED ELECTRICAL CONTRACTOR.
12. THE CONTRACTOR SHALL PROVIDE COMPLETE UPDATED TYPEWRITTEN PANEL SCHEDULES FOR ALL PANELBOARDS.
13. AS BUILT DRAWINGS SHALL BE GIVEN TO THE OWNER AT THE COMPLETION OF THE PROJECT.
14. THE CONTRACTOR SHALL VERIFY THE CEILING TYPES WITH THE GENERAL CONTRACTOR PRIOR TO THE PURCHASE OF ANY LIGHT FIXTURES SO THAT THE PROPER TRIM WILL BE PROVIDED FOR ALL FIXTURES. ANY DIFFERENCES WILL BE THE RESPONSIBILITY OF THIS CONTRACTOR.
15. ALL WIRE SIZES INDICATED ON THE PANEL SCHEDULES ARE BASED ON 75 DEGREE COPPER THHN/THWN WIRE. ALL WIRE TERMINALS AND EQUIPMENT SHALL BE LISTED AND APPROVED FOR 75°C. ONLY THWN-2 WIRE SHALL BE INSTALLED IN WET AND EXTERIOR LOCATION.
16. MINIMUM WIRE AND CONDUIT SIZES:
   - MINIMUM WIRE SIZE SHALL BE #12 AWG.
   - MINIMUM CONDUIT SIZE INSIDE BUILDING SHALL BE 1/2".
   - MINIMUM CONDUIT SIZE OUTSIDE BUILDING ABOVE GROUND SHALL BE 3/4".
   - MINIMUM CONDUIT SIZE UNDER GROUND SHALL BE 1".
17. ARMORED CABLE (TYPE AC) AND METAL-CLAD CABLE (TYPE MC) ARE NOT ALLOWED IN THIS PROJECT.
18. THE MAXIMUM NUMBER OF HOMERUNS IN A CONDUIT SHALL NOT EXCEED THREE (3). SHARED NEUTRAL IS NOT ALLOWED.
19. WHERE OUTLETS ARE SHOWN BACK TO BACK ON RATED WALLS, STAGGER OUTLETS SO THAT THEY ARE SEPARATED BY A MINIMUM OF 24".
20. ALL DISCONNECTS SHALL HAVE SEPARATE NEUTRAL AND GROUND BARS.
21. ALL PANELS SHALL BE THREE PHASE, FOUR WIRE UNLESS OTHERWISE NOTED.
22. BOXES AND CONDUITS SHALL NOT BE INSTALLED RECESSED IN A 3-HOUR OR HIGHER RATED WALL. WHEN OUTLETS ARE INDICATED ON THESE WALLS, FIELD COORDINATE CONDUIT AND BOX INSTALLATION.
23. FOR ALL RECEPTACLES LOCATED ABOVE COUNTER TOP, MOUNTING HEIGHT SHALL COMPLY WITH ANSI A117.1, SECTION 308. E.C. SHALL FIELD VERIFY CASEWORK DETAIL WITH ARCHITECT PRIOR TO ROUGH-IN.
24. ELECTRICAL SERVICE:
   - ALL UNDERGROUND HIGH VOLTAGE FEEDERS AND PAD MOUNTED TRANSFORMERS, IN THE PROJECT AREA, BELONG TO CRAVEN COMMUNITY COLLEGE.
   - NEW UNDERGROUND SERVICE WILL BE FED FROM EXISTING PAD MOUNTED TRANSFORMER.
   - FIELD COORDINATE WORK SCHEDULE WITH THE COLLEGE PRIOR TO START WORK.
25. SEE SPECIFICATIONS.

2018 NORTH CAROLINA ENERGY CODE

ELECTRICAL SYSTEM AND EQUIPMENT
METHOD OF COMPLIANCE: PRESCRIPTIVE

	LIGHTING SCHEDULE:			
	FLUORESCENT T8/T5	LED	CFL	INCAN
LAMP TYPE REQUIRED:	N/A	SEE	N/A	N/A
NUMBER OF LAMPS:	N/A	FIXTURE	N/A	N/A
BALLAST TYPE USED:	N/A	SCHEDULE	N/A	N/A
NUMBER OF BALLASTS:	N/A		N/A	N/A
TOTAL WATTAGE PER FIXTURE:	N/A		N/A	N/A

	SPECIFIED	ALLOWED BY CODE
INTERIOR WATTAGE		
CONVENTION CENTER	9052	10726 **
EXTERIOR WATTAGE	ZONE 3	
ALLOWANCE		750
EXIT DOOR		1020
TOTAL	836	1770

NOTES:

1. ** PER SECTION C406.3, THE WHOLE AREA ALLOWED BY CODE IS REQUIRED TO BE 10% LOWER THAN THOSE CALCULATED PER SECTION C405.4.2.
   - VALUE CALCULATE PER SECTION C405.4.2: 1198 WATTS
   - VALUE PER SECTION C406.3: 10726 WATTS
2. ALL EXTERIOR LIGHTS:
   - CONTROLLED BY PHOTOCELL THAT WILL NOT INTENDED TO BE ON FOR 24 HOUR OPERATION.

DESIGNER STATEMENT:
TO THE BEST OF MY KNOWLEDGE AND BELIEF, THE DESIGN OF THIS BUILDING COMPLIES WITH THE ELECTRICAL SYSTEM AND EQUIPMENT REQUIREMENTS OF THE NORTH CAROLINA STATE BUILDING CODE, 2018 - ENERGY.

SIGNED:
NAME: SUJAN PRAMOJANEY, P.E.
TITLE: ENGINEER

ATLANTEC ENGINEERS, PA 23052
now IMEG
3221 BLUE RIDGE ROAD, SUITE 113
RALEIGH, NC 27612
PH: (919) 571-1111

SEAL: NORTH CAROLINA PROFESSIONAL CORPORATION — IMEG CONSULTANTS CORP. No. F-1507

SEAL: NORTH CAROLINA PROFESSIONAL — SEAL 027479 — SUJAN PRAMOJANEY — ENGINEER — PROFESSIONAL ENGINEER

10/15/2024

GENERAL NOTES

KEY PLAN

SCO ID #23-26923-01A

NO	REVISION	DATE

JKF ARCHITECTURE

625 LYNNDALE CT., SUITE F, GREENVILLE, NC 27858 252-355-1068

CRAVEN COMMUNITY COLLEGE
CORPORATE TRAINING CENTER
NEW BERN, NC

DRAWING TITLE: LEGEND, NOTES

SCALE: 1/8" = 1'-0"	DRAWING NO: E0.0
DRAWN: SP	
CHECKED: SP	
DATE: 9-1-2024	
PROJECT NO.: 2023-09	

© COPYRIGHT, JKF ARCHITECTURE PC., JOHN K. FARKAS, AIA

23052

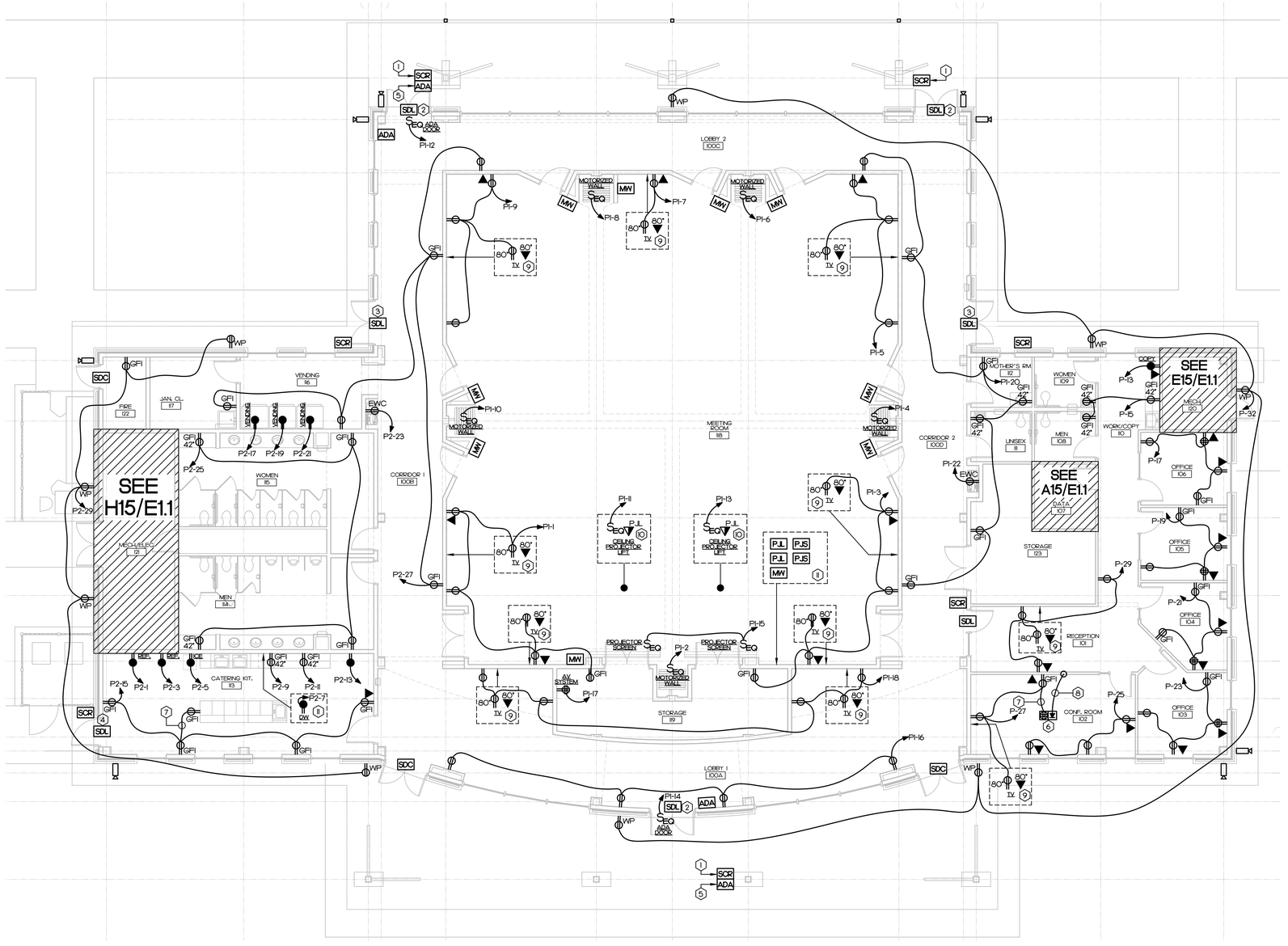

KEY NOTES

1. SECURITY CARD READER AT ALUMINUM POLE.
   - FIELD VERIFY INSTALLATION WITH ARCHITECT PRIOR TO ROUGH-IN.
   - PROVIDE 1" CONDUIT RUN UNDERGROUND TO BUILDING EXTERIOR WALL AND TURN UP IN WALL TO SECURITY J-BOX ABOVE DOOR.
   - SEE DETAIL G8/E5.2.
   - SEE DETAIL A6/A3.4.
2. SECURED DOUBLE DOOR. SEE DETAIL G8/E5.2.
3. SECURED DOUBLE DOOR. SEE DETAIL G5/E5.2.
4. SECURED SINGLE DOOR. SEE DETAIL A8/E5.2.
5. ADA DOOR PUSH BUTTON AT ALUMINUM POLE.
   - FIELD VERIFY INSTALLATION WITH ARCHITECT PRIOR TO ROUGH-IN.
   - PROVIDE 1" CONDUIT RUN UNDERGROUND TO BUILDING EXTERIOR WALL AND TURN UP IN WALL TO ADA DOOR CONTROLLER.
   - WIRING BY E.C., PER MANUFACTURER INSTRUCTION.
   - SEE DETAIL G8/E5.2.
   - SEE DETAIL A6/A3.4.
6. FLOOR OUTLET. FIELD VERIFY EXACT LOCATION WITH ARCHITECT PRIOR TO ROUGH-IN.
7. CONDUIT UNDER SLAB.
8. 1 1/4" CONDUIT RUN UNDER SLAB TO NEAREST WALL AND TURN UP IN WALL AND STUB 6" INTO ACCESSIBLE CEILING SPACE.
9. RECEPTACLE AND COMMUNICATION OUTLET FOR TV. FIELD VERIFY EXACT LOCATION AND HEIGHT WITH ARCHITECT PRIOR TO ROUGH-IN.
10. POWER CONNECTION AND COMMUNICATION OUTLET FOR PROJECTOR LIFT AT CEILING. SEE A5.1 FOR LOCATION. PROVIDE CONNECTION TO PROJECTOR LIFT PER MANUFACTURER INSTRUCTION.
11. GROUP OF CONTROL SWITCHES ON WALL:
    - MOUNT TOP OF CONTROL SWITCHES 48" A.F.F. FIELD VERIFY INSTALLATION WITH ARCHITECT PRIOR TO ROUGH-IN.
    - WIRE PROJECTOR LIFT CONTROL SWITCH TO ASSOCIATED PROJECTOR LIFT AS REQUIRED.
    - WIRE PROJECTOR SCREEN CONTROL SWITCH TO ASSOCIATED PROJECTOR SCREEN, AS REQUIRED.
    - WIRE MOTORIZED WALL CONTROL SWITCH TO ASSOCIATED MOTORIZED WALL AS REQUIRED.
8. RECEPTACLE FOR DISHWASHER, LOCATED IN CASE WORK. FIELD VERIFY LOCATION WITH CASE WORK PRIOR TO ROUGH-IN.

NOTES

1. NOTES FOR ALL WIRING DEVICES ON WALL:
   - FIELD VERIFY LOCATION AND HEIGHT WITH ARCHITECT PRIOR TO ROUGH-IN.
   - SEE DETAIL H10/A8.1 FOR WIRING DEVICE MOUNTING HEIGHT.
2. NOTES FOR ALL SECURITY CAMERAS AT EXTERIOR WALL:
   - FIELD VERIFY LOCATION AND HEIGHT WITH ARCHITECT PRIOR TO ROUGH-IN.
   - SEE SHEET A2.1 (BUILDING ELEVATION) FOR LOCATION AND HEIGHT.

N

0 4' 8' 16'

SCALE: 1/8" = 1'-0"

POWER PLAN
1/8" = 1'-0" A1.2

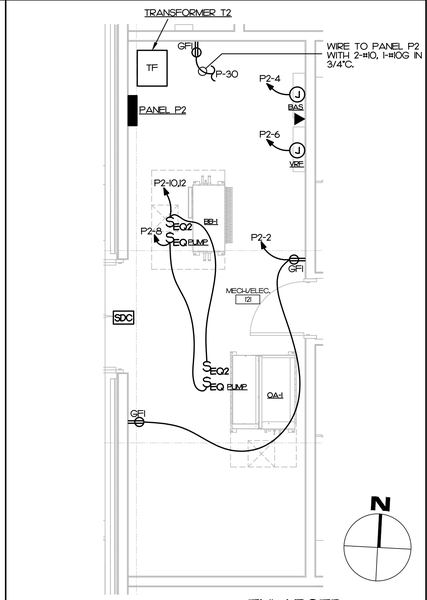

N

ENLARGED POWER PLAN
1/4" = 1'-0" H15

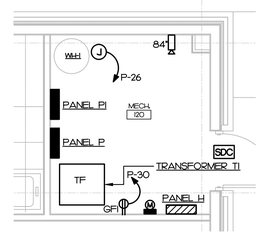

N

ENLARGED POWER PLAN
1/4" = 1'-0" E1.5

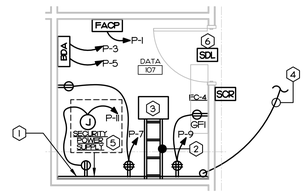

KEY NOTES

1. 3/4" FIRE PROOF PLYBOARD ON THIS WALL FROM FLOOR TO 8 FT. A.F.F.
2. 12" LADDER TYPE CABLE TRAY AT 84" A.F.F. BOND TO GROUND BAR WITH #6G.
3. 19" FREE STANDING COMMUNICATION RACK. BOND TO GROUND BAR WITH #6G. SEE DETAIL A8/E5.1.
4. 1 - 4" UNDERGROUND CONDUITS FOR COMMUNICATION SERVICE. SEE A1.8/E7.1 FOR ROUTING AND CABLE INSTALLATION. TERMINATE CONDUIT 12" A.F.F. IN DATA 107.
5. SECURITY SYSTEM POWER SUPPLY UNIT.
   - SEE DETAIL A1.5/5.1.
   - FIELD VERIFY LOCATION TO BE ADJACENT TO SECURITY CONTROL PANEL WITH OWNER'S CONTRACTOR. SECURITY CONTROL PANEL IS FURNISHED AND INSTALLED BY OWNER'S CONTRACTOR.
6. SECURED DOOR. SEE DETAIL A8/E5.2.

N

ENLARGED POWER PLAN
1/4" = 1'-0" A1.5

ATLANTEC
ENGINEERS, PA 29052
now IMEG
3221 BLUE RIDGE ROAD, SUITE 113
RALEIGH, NC 27612
PH: (919) 571-1111

SEAL: NORTH CAROLINA PROFESSIONAL CORPORATION — IMEG CONSULTANTS CORP. No. F-1507

SEAL: NORTH CAROLINA PROFESSIONAL ENGINEER SEAL 027479 — 10/15/2024

GENERAL NOTES

KEY PLAN

SCO ID #23-26923-01A

NO	REVISION	DATE

JKF ARCHITECTURE
625 LYNNDALE CT., SUITE F, GREENVILLE, NC 27858 252-355-1068

CRAVEN COMMUNITY COLLEGE
CORPORATE TRAINING CENTER
NEW BERN, NC

DRAWING TITLE: POWER PLAN

SCALE	1/8" = 1'-0"
DRAWN	SP
CHECKED	SP
DATE	9-1-2024
PROJECT NO.	2023-09
DRAWING NO	E1.1

© COPYRIGHT, JKF ARCHITECTURE PC. JOHN K. FAIRKAS, AIA

23052

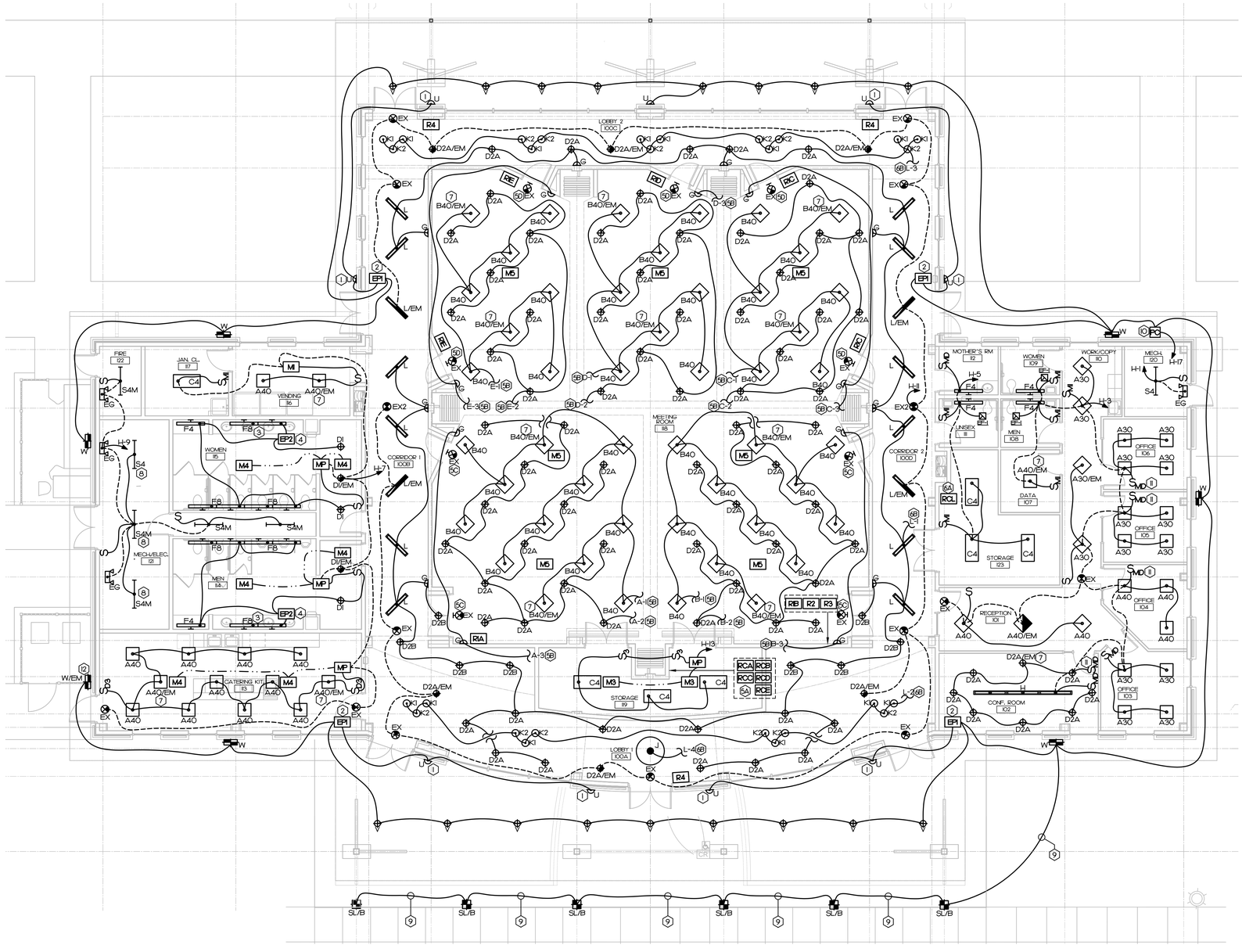

KEY NOTES:

1. EXTERIOR LIGHT TO BE USED AS EXTERIOR EMERGENCY LIGHT, CONTROLLED BY EMERGENCY POWER BACKUP UNIT PER KEY NOTE #2.
2. EMERGENCY POWER BACKUP UNIT.
   - MOUNT ON WALL ABOVE ACCESSIBLE CEILING. LOCATE REMOTE TEST SWITCH PER ARCHITECT INSTRUCTION.
   - CONNECT EMERGENCY CIRCUIT UNSWITCHED TO CKT# H-17.
   - CONNECT NORMAL CIRCUIT VIA PHOTOCELL.
3. LIGHT FIXTURE TO BE USED AS EMERGENCY LIGHT, CONTROLLED BY EMERGENCY POWER BACKUP UNIT PER KEY NOTE #4.
4. EMERGENCY POWER BACKUP UNIT.
   - MOUNT ON WALL ABOVE ACCESSIBLE CEILING. LOCATE REMOTE TEST SWITCH PER ARCHITECT INSTRUCTION.
   - CONNECT EMERGENCY CIRCUIT UNSWITCHED TO HOMERUN.
   - CONNECT NORMAL CIRCUIT VIA WALL SWITCH.
5. MEETING ROOM 118 LIGHTING CONTROL DEVICES.
   - SEE DETAIL G6/ES1.
   - CKT# H-13 AND H-15 ARE LIGHTING CIRCUITS FOR THIS ROOM.

(5A) ROOM CONTROL UNITS. FIELD COORDINATE LOCATION ON WALL BELOW OR ABOVE CEILING WITH ARCHITECT PRIOR TO ROUGH-IN.

(5B) CIRCUIT NUMBER TO ROOM CONTROL.

(5C) EXIT LIGHT. CONNECT UNSWITCHED TO CKT# H-13

(5D) EXIT LIGHT. CONNECT UNSWITCHED TO CKT# H-15.

6. LOBBY AND CORRIDOR LIGHTING CONTROL DEVICES.
   - SEE DETAIL G5/ES1.
   - CKT# H-13 IS LIGHTING CIRCUIT FOR THIS AREAS.

(6A) ROOM CONTROL UNITS. FIELD COORDINATE LOCATION ON WALL BELOW OR ABOVE CEILING WITH ARCHITECT PRIOR TO ROUGH-IN.

(6B) CIRCUIT NUMBER TO ROOM CONTROL.

7. FIXTURE WITH EMERGENCY BATTERY BACKUP.
   - CONNECT EMERGENCY CIRCUIT UNSWITCHED TO HOMERUN.
   - CONNECT NORMAL CIRCUIT VIA WALL SWITCH OR LIGHTING CONTROL CIRCUITRY.
8. FIELD VERIFY LOCATION WITH M.C. PRIOR TO ROUGH-IN.
9. CONDUIT RUN UNDERGROUND.
10. PHOTOCELL FOR EXTERIOR LIGHT. E.C. SHALL FIELD COORDINATE LOCATION TO FACE NORTH AND NOT TO BE INTERFERED WITH ANY LIGHT SOURCE PRIOR TO ROUGH-IN.
11. FIELD VERIFY LIGHT SWITCH(ES) LOCATION NOT TO BE BLOCKED BY DOOR SWING PRIOR TO ROUGH-IN.
12. EXTERIOR FIXTURE WITH EMERGENCY BATTERY BACKUP.
    - CONNECT EMERGENCY CIRCUIT UNSWITCHED TO CKT#H-17.
    - CONNECT NORMAL CIRCUIT VIA PHOTOCELL.

NOTES

1. NOTES FOR ALL LIGHT FIXTURES:
   - FIELD VERIFY LOCATION WITH ARCHITECT PRIOR TO ROUGH-IN.
   - SEE SHEET A5.1 FOR LOCATIONS.
2. NOTES FOR ALL WIRING DEVICES AND LIGHT FIXTURES ON WALL:
   - FIELD VERIFY LOCATION AND HEIGHT WITH ARCHITECT PRIOR TO ROUGH-IN.
   - SEE DETAIL H10/A8.1 FOR WIRING DEVICE MOUNTING HEIGHT.
   - SEE SHEET A2.1 FOR EXTERIOR WALL MOUNTED FIXTURE LOCATION AND HEIGHT.
3. TYPE C4 FIXTURE LUMEN SETTING:
   - 4000 LUMEN: 123
   - 6000 LUMEN: 117
3. TYPE D1, D1/EM FIXTURE LUMEN SETTING:
   - 1500 LUMEN: 115
   - 2000 LUMEN: 114

N

0 4' 8' 16'

SCALE: 1/8" = 1'-0"

LIGHTING PLAN A1.5
1/8" = 1'-0"

ATLANTEC ENGINEERS, PA 29052
now IMEG
3221 BLUE RIDGE ROAD, SUITE 113
RALEIGH, NC 27612
PH: (919) 571-1111

SEAL

NORTH CAROLINA PROFESSIONAL CORPORATION
IMEG CONSULTANTS CORP.
No. F-1507

SEAL

NORTH CAROLINA PROFESSIONAL ENGINEER
SEAL 027479
STEVEN C. PARKS
ENGINEER IN PRESIDENT
10/15/2024

GENERAL NOTES

KEY PLAN

SCO ID #23-26923-01A

NO	REVISION	DATE

JKF ARCHITECTURE
625 LYNNDALE CT., SUITE F, GREENVILLE, NC 27858 252-355-1068

CRAVEN COMMUNITY COLLEGE
CORPORATE TRAINING CENTER
NEW BERN, NC

DRAWING TITLE
LIGHTING PLAN

SCALE	DRAWING NO
1/8" = 1'-0"	E2.1
DRAWN: SP	
CHECKED: SP	
DATE: 9-1-2024	
PROJECT NO.: 2023-09	

© COPYRIGHT, JKF ARCHITECTURE PC, JOHN K. FARKAS, AIA

23052

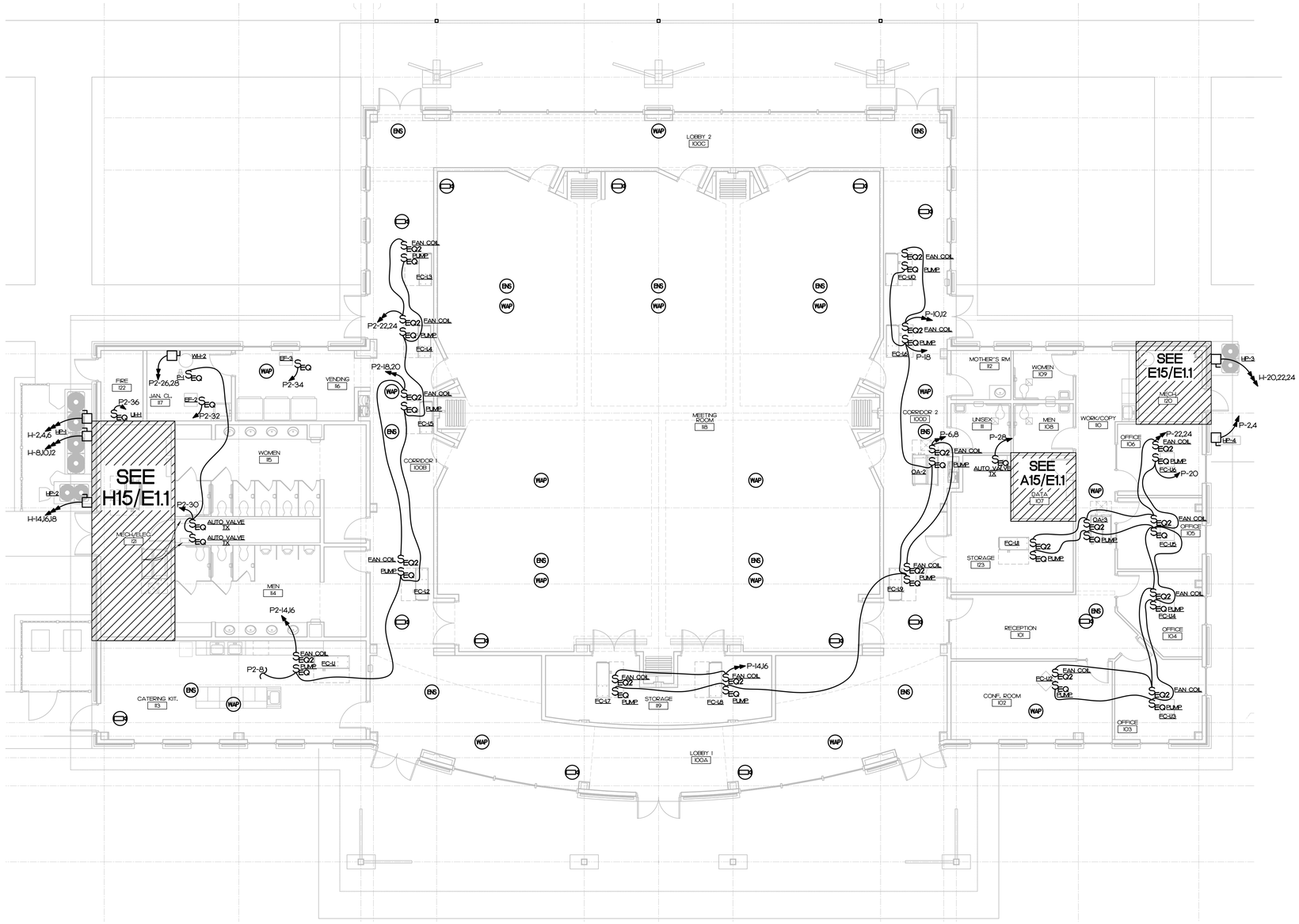

NOTES

1. NOTES FOR ALL CEILING COMMUNICATION/SECURITY DEVICES:
   - DEVICES ARE FURNISHED AND INSTALLED BY THE COLLEGE'S CONTRACTOR.
   - E.C. IS RESPONSIBLE TO PROVIDE CAT6 DROPS AT ALL LOCATIONS. SEE LEGEND AND COMMUNICATION RISER DIAGRAM.
   - FIELD VERIFY LOCATION WITH ARCHITECT AND THE COLLEGE'S CONTRACTOR PRIOR TO ROUGH-IN.
   - SEE SHEET A5.1 FOR LOCATIONS.

N

0 4' 8' 16'

SCALE: 1/8" = 1'-0"

MECHANICAL AND PLUMBING POWER PLAN
CEILING SECURITY/COMMUNICATION DEVICE PLAN
1/8" = 1'-0"

A15

23052

ATLANTEC ENGINEERS, PA 23052
now IMEG
3221 BLUE RIDGE ROAD, SUITE 113
RALEIGH, NC 27612
PH: (919) 571-1111

SEAL: NORTH CAROLINA PROFESSIONAL CORPORATION — IMEG CONSULTANTS CORP. No. F-1507

SEAL: NORTH CAROLINA PROFESSIONAL SEAL 027479 ENGINEER SIVIN PRAMOJANEY

10/15/2024

GENERAL NOTES

KEY PLAN

SCO ID #23-26923-01A

NO	REVISION	DATE

JKF ARCHITECTURE
625 LYNNDALE CT., SUITE F, GREENVILLE, NC 27858 252-355-1068

CRAVEN COMMUNITY COLLEGE
CORPORATE TRAINING CENTER
NEW BERN, NC

DRAWING TITLE
MECH. AND PLUMB. POWER PLAN
CEILING SECURITY/COMM. DEVICE PLAN

SCALE	1/8" = 1'-0"
DRAWN	SP
CHECKED	SP
DATE	9-1-2024
PROJECT NO.	2023-09
DRAWING NO	E3.1

© COPYRIGHT, JKF ARCHITECTURE PC., JOHN K. FARKAS, AIA

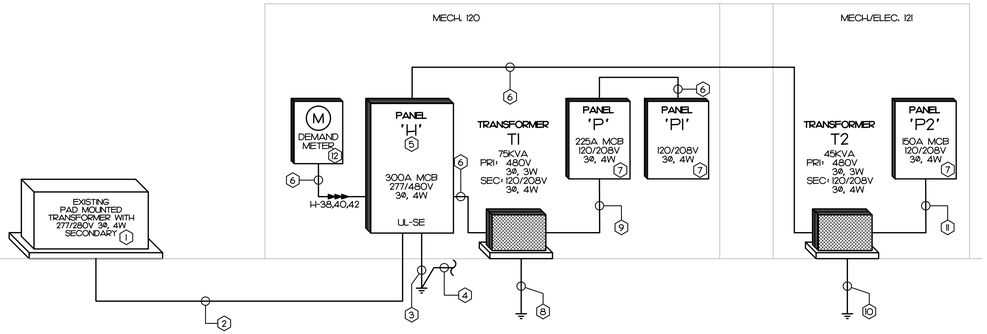

KEY NOTES:

1. EXISTING UTILITY PAD MOUNTED TRANSFORMER.
   - SEE SHEET E7.1 FOR LOCATION.
   - E.C. SHALL FIELD VERIFY EXISTING CONDITION AND PROVIDE LUGS TO EXISTING TRANSFORMER SECONDARY SUITABLE TO CONNECT TO NEW UNDERGROUND SERVICE FEEDER PER KEY NOTE #2.
   - SEE NOTE #1.
2. UNDERGROUND SERVICE FEEDER.
   - 4-#350 KCMIL IN 3"C.
   - MIN. BURIAL DEPTH OF 24" B.F.G.
   - CONDUIT SHALL BE ENCASED IN CONCRETE. SEE DETAIL A5/E5.3 AND SPECIFICATION. SEE DETAIL A15/E7.1 FOR ROUTING.
3. GROUNDING ELECTRODE CONDUCTORS PER NEC 250.
   - 1-#2G CU IN 3/4"C TO BUILDING STEEL, C.W. MAIN AND SPRINKLER MAIN.
   - 1-#4G CU IN 1/2"C TO REINFORCE STEEL AT CONCRETE FOOTING.
   - 1-#6G CU IN 1/2"C TO 2 DRIVE RODS.
4. 1-#6G CU IN 3/4"C TO COMMUNICATION BOARD IN DATA 107.
5. BUILDING SERVICE PANEL BOARD.
   - UL LISTED FOR USE AS SERVICE EQUIPMENT.
   - SEE PANEL SCHEDULE FOR DETAIL.
   - LABEL MAIN CIRCUIT BREAKER "SERVICE DISCONNECT".
   - SEE NOTE #2.
6. FEEDER. SEE PANEL SCHEDULE FOR DETAIL.
7. PANEL BOARD. SEE PANEL SCHEDULE FOR DETAIL. SEE NOTE #2.
8. GROUNDING ELECTRODE CONDUCTORS PER NEC 250.
   - 1-#2G CU IN 1/2"C TO BUILDING STEEL.
9. TRANSFORMER SECONDARY.
   - 4-#4/0, 1-#2G IN 2 1/2"C.
10. GROUNDING ELECTRODE CONDUCTORS PER NEC 250.
    - 1-#6G CU IN 1/2"C TO BUILDING STEEL.
11. TRANSFORMER SECONDARY.
    - 4-#1/0, 1-#6G IN 2"C.
12. DEMAND METER:
    - 400A, 277/480V 3Ø, 4W RATING.
    - V, A, KW, KW DEMAND (PEAK RECORD), P.F., KWH.
    - PROVIDE C.T. AND INSTALL IN PANEL H TO MEASURE UNDERGROUND SERVICE FEEDER.
    - BACNET MS/TP INTERFACE.
    - E-MON/D-MON: E32-480400-RBACKIT OR EQUAL

NOTES:

1. EXISTING PAD MOUNTED TRANSFORMER.
   - TRANSFORMER RATING:
     a. 1500 KVA
     b. 277/480V SECONDARY VOLTAGE.
     c. 5.69% IMPEDANCE.
     d. AVAILABLE FAULT CURRENT BASED ON INFINITE BUS IS 31,720 AMPS.
   - THE TRANSFORMER IS BELONG TO THE COLLEGE.
   - E.C. IS RESPONSIBLE TO ALL RELATED WORKS BOTH HIGH VOLTAGE AND LOW VOLTAGE. E.C. SHALL GET THE COLLEGE APPROVAL PRIOR TO START WORK AT THE TRANSFORMER AND HIGH VOLTAGE SYSTEM.
   - E.C. SHALL SUBMIT POWER SHUTDOWN SCHEDULE TO THE COLLEGE FOR APPROVAL AS REQUIRED.
   - CURRENTLY, THE TRANSFORMER IS PROVIDING POWER TO EXISTING ADVANCE MANUFACTURING BUILDING. EXISTING TRANSFORMER LOAD IS DESCRIBED AS FOLLOWS:
     a. EXISTING METERING AT THE BUILDING SHOWS PEAK DEMAND OF 325.7 KW.
     b. EXISTING LOAD PER NEC 220.87 = 452 KVA (ASSUMED 90% POWER FACTOR).
     c. AVAILABLE SPARE CAPACITY = 1048 KVA
2. FAULT CURRENTS:
   - E.C. SHALL PROVIDE LABEL INDICATING FAULT CURRENTS ON ALL SERVICE DISCONNECTS AND PANEL BOARDS PER ENGINEER INSTRUCTION.
   - AVAILABLE FAULT CURRENT AT NEW PANEL H IS ESTIMATED TO BE 16,638 AMPS BASED ON 180 FT. UNDERGROUND FEEDER.

POWER RISER DIAGRAM

NO SCALE

G8

PANEL P — 120/208V, 3 PHASE, 4 WIRE

CKT	DESCRIPTION	KVA	C	G	W	CB	CKT	CKT	CB	W	G	C	KVA	DESCRIPTION	CKT
1	FACP	1.07	0.4	1/2	12	12	20	1	2	2P	10	10	3/4	2.0	HP-4	2
3	EDA	1.07	0.4	1/2	12	12	20	3	4	2P	10	--	--	2.0		4
5	EDA	1.07	0.0	1/2	12	12	20	5	6	15	12	12	1/2	0.9	FC-19, CA-2	6
7	REC	1.07	0.5	1/2	12	12	20	7	8	2P	12	--	--	0.9		8
9	REC	1.07	0.5	1/2	12	12	20	9	10	15	12	12	1/2	1.0	FC-16, 1.0	10
11	SECURITY	1.07	0.4	1/2	12	12	20	11	12	2P	12	--	--	1.0		12
13	COPY	1.0	0.8	1/2	12	12	20	13	14	15	12	12	1/2	1.2	FC 1.7, 1.8	14
15	REC	1.08-10	0.5	1/2	12	12	20	15	16	2P	12	--	--	1.2		16
17	REC	1.06	0.9	1/2	12	12	20	17	18	15	12	12	1/2	0.3	COND. PUMP	18
19	REC	1.05	0.9	1/2	12	12	20	19	20	15	12	12	1/2	0.4	COND. PUMP	20
21	REC	1.04	0.9	1/2	12	12	20	21	22	15	12	12	1/2	0.8	OA-3, FA-U1-U6	22
23	REC	1.03	0.9	1/2	12	12	20	23	24	2P	12	--	--	0.8		24
25	REC	1.02	0.5	1/2	12	12	20	25	26	20	12	12	1/2	1.5	WH	26
27	REC	1.02	0.9	1/2	12	12	20	27	28	15	12	12	1/2	0.1	AUTOQ VALVE TX	28
29	REC	1.01	0.7	1/2	12	12	20	29	30	20	12	12	1/2	0.4	120, 121 REC	30
31	SPARE		0.0	--	--	--	20	31	32	20	10	10	3/4	0.5	EXTERIOR REC	32
33	SPARE		0.0	--	--	--	20	33	34	--	--	--	--	0.0	SPACE ONLY	34
35	SPARE		0.0	--	--	--	20	35	36	--	--	--	--	0.0	SPACE ONLY	36
37	PANEL P1		7.7	1 1/4	8	3	100	37	38	--	--	--	--	0.0	SPACE ONLY	38
39	PROVIDE #3 NEUTRAL		7.2	--	--	3	3P	39	40	--	--	--	--	0.0	SPACE ONLY	40
41			5.3	--	--	3	--	41	42	--	--	--	--	0.0	SPACE ONLY	42

DESCRIPTION	CONNECTED KVA	DEMAND FACTOR	DEMAND KVA
CONT. LOAD	0.00	125%	0.00
RECEPTACLE	17.29	100%/50%	13.65
MTRS/COOLS	12.41	100%	12.41
HEATS	0.00	100%	0.00
WATER HEATER	1.50	100%	1.50
EQUIPMENT	13.17	100%	13.17
KITCHEN EQUIP.	0.00	65%	0.00
SPECIAL EQ.	0.00	100%	0.00
25% OF LARGEST HVAC/MOTOR			0.00
TOTAL DEMAND			40.72

225 A MINIMUM BUS SIZE
225 A MAIN CIRCUIT BREAKER
10 K MINIMUM AIC RATING

SURFACE MOUNTING
NEMA 1 ENCLOSURE
GROUND BAR

NOTES
1. SEE SPECIFICATION
2.
3.
4.
5.

CONNECTED LOADS	
PHASE A:	17.3 KVA
PHASE B:	15.5 KVA
PHASE C:	11.6 KVA
TOTAL:	44.4 KVA
DEMAND	113 AMP

PANEL P1 — 120/208V, 3 PHASE, 4 WIRE

CKT	DESCRIPTION	KVA	C	G	W	CB	CKT	CKT	CB	W	G	C	KVA	DESCRIPTION	CKT
1	REC 1.8, 1.9	0.9	3/4	10	10	20	1	2	20	10	10	3/4	1.7	1.8 MOTORIZED WALL	2
3	REC 1.8, 1.9	0.9	3/4	10	10	20	3	4	20	10	10	3/4	1.7	1.8 MOTORIZED WALL	4
5	REC 1.8	0.7	3/4	10	10	20	5	6	20	10	10	3/4	1.7	1.8 MOTORIZED WALL	6
7	REC 1.8	0.4	3/4	10	10	20	7	8	20	10	10	3/4	1.7	1.8 MOTORIZED WALL	8
9	REC 1.8	0.7	3/4	10	10	20	9	10	20	10	10	3/4	1.7	1.8 MOTORIZED WALL	10
11	PROJECTOR 1.8	1.3	3/4	10	10	15	11	12	15	10	10	3/4	0.5	100C ADA DOOR	12
13	PROJECTOR 1.8	1.3	3/4	10	10	15	13	14	15	10	10	3/4	0.5	100A ADA DOOR	14
15	SCREEN 1.8	1.0	3/4	10	10	15	15	16	20	10	10	3/4	0.7	100A REC	16
17	AV SYSTEM 1.9	0.4	3/4	10	10	20	17	18	20	10	10	3/4	0.7	100A REC	18
19	SPACE ONLY	0.0	--	--	--	--	19	20	20	10	10	3/4	1.3	100C, 100D, 1.11, 1.12 REC	20
21	SPACE ONLY	0.0	--	--	--	--	21	22	20	10	10	3/4	0.5	100D EWC	22
23	SPACE ONLY	0.0	--	--	--	--	23	24	--	--	--	--	0.0	SPACE ONLY	24
25	SPACE ONLY	0.0	--	--	--	--	25	26	--	--	--	--	0.0	SPACE ONLY	26
27	SPACE ONLY	0.0	--	--	--	--	27	28	--	--	--	--	0.0	SPACE ONLY	28
29	SPACE ONLY	0.0	--	--	--	--	29	30	--	--	--	--	0.0	SPACE ONLY	30

DESCRIPTION	CONNECTED KVA	DEMAND FACTOR	DEMAND KVA
CONT. LOAD	0.00	125%	0.00
RECEPTACLE	9.01	100%/50%	9.01
MTRS/COOLS	0.00	100%	0.00
HEATS	0.00	100%	0.00
WATER HEATER	0.00	100%	0.00
EQUIPMENT	1.89	100%	1.89
KITCHEN EQUIP.	0.00	65%	0.00
SPECIAL EQ.	0.00	100%	0.00
25% OF LARGEST HVAC/MOTOR			0.00
TOTAL DEMAND			20.20

100 A MINIMUM BUS SIZE
MAIN LUGS ONLY
10 K MINIMUM AIC RATING

SURFACE MOUNTING
NEMA 1 ENCLOSURE
GROUND BAR

NOTES
1. SEE SPECIFICATION
2.
3.
4.
5.

CONNECTED LOADS	
PHASE A:	7.7 KVA
PHASE B:	7.2 KVA
PHASE C:	5.3 KVA
TOTAL:	20.2 KVA
DEMAND	56 AMP

PANEL H — 277/480V, 3 PHASE, 4 WIRE

CKT	DESCRIPTION	KVA	C	G	W	CB	CKT	CKT	CB	W	G	C	KVA	DESCRIPTION	CKT
1	LIGHTS 1.20	0.0	1/2	12	12	20	1	2	50	8	10	3/4	8.9	HP-1	2
3	LIGHTS 1.01-10	1.3	1/2	12	12	20	3	4	3P	8	--	--	8.9	MCA	4
5	LIGHTS 1.11, 1.12, 1.23	0.2	1/2	12	12	20	5	6	--	8	--	--	8.9	CONNECTION #1	6
7	LIGHTS 1.13-1.17	1.4	1/2	12	12	20	7	8	50	8	10	3/4	8.9	HP-1	8
9	LIGHTS 1.21, 1.22	0.2	1/2	12	12	20	9	10	3P	8	--	--	8.9	MCA	10
11	LIGHTS 100A-D	2.6	1/2	12	12	20	11	12	--	8	--	--	8.9	CONNECTION #2	12
13	LIGHTS 1.18, 1.19	2.1	1/2	12	12	20	13	14	25	10	10	3/4	5.0	HP-2	14
15	LIGHTS 1.18	2.0	1/2	12	12	20	15	16	3P	10	--	--	5.0	MCA	16
17	LIGHTS EXTERIOR	1.0	1/2	12	12	20	17	18	--	10	--	--	5.0		18
19	SPACE ONLY	0.0	--	--	--	--	19	20	50	8	10	3/4	9.1	HP-3	20
21	SPACE ONLY	0.0	--	--	--	--	21	22	3P	8	--	--	9.1	MCA	22
23	SPACE ONLY	0.0	--	--	--	--	23	24	--	8	--	--	9.1		24
25	TRANSFORMER T1	17.3	1 1/2	6	2	110	25	26	--	--	--	--	0.0	SPACE ONLY	26
27		15.5	--	--	2	3P	27	28	--	--	--	--	0.0	SPACE ONLY	28
29		11.6	--	--	2	--	29	30	--	--	--	--	0.0	SPACE ONLY	30
31	TRANSFORMER T2	9.1	1 1/4	8	4	70	31	32	--	--	--	--	0.0	SPACE ONLY	32
33		9.5	--	--	4	3P	33	34	--	--	--	--	0.0	SPACE ONLY	34
35		7.7	--	--	4	--	35	36	--	--	--	--	0.0	SPACE ONLY	36
37	SURGE PROTECTION	0.0	--	--	--	60	37	38	15	12	12	3/4	0.0	DEMAND METER	38
39		0.0	--	--	--	3P	39	40	3P	12	--	--	0.0	PROVIDE #12 NEUTRAL	40
41		0.0	--	--	--	--	41	42	--	12	--	--	0.0		42

DESCRIPTION	CONNECTED KVA	DEMAND FACTOR	DEMAND KVA
CONT. LOAD	1.24	125%	14.05
RECEPTACLE	21.79	100%/50%	15.90
MTRS/COOLS	15.93	100%	15.93
HEATS	1.00	100%	1.00
WATER HEATER	6.00	100%	6.00
EQUIPMENT	21.07	100%	21.07
KITCHEN EQUIP.	0.00	65%	0.00
SPECIAL EQ.	0.00	100%	0.00
25% OF LARGEST HVAC/MOTOR			0.00
TOTAL DEMAND			173.95

400 A MINIMUM BUS SIZE
300 A MAIN CIRCUIT BREAKER
18 K MINIMUM AIC RATING

SURFACE MOUNTING
NEMA 1 ENCLOSURE
GROUND BAR
UL LISTED FOR USE AS SERVICE EQUIPMENT

NOTES
1. SEE SPECIFICATION
2.
3.
4.
5.

CONNECTED LOADS	
PHASE A:	61.8 KVA
PHASE B:	60.3 KVA
PHASE C:	55 KVA
TOTAL:	177 KVA
DEMAND	209 AMP

PANEL P2 — 120/208V, 3 PHASE, 4 WIRE

CKT	DESCRIPTION	KVA	C	G	W	CB	CKT	CKT	CB	W	G	C	KVA	DESCRIPTION	CKT
1	REFRIGERATOR 1.15	0.8	1/2	12	12	20	1	2	15	12	12	1/2	0.4	1.21 REC	2
3	REFRIGERATOR 1.15	0.8	1/2	12	12	20	3	4	20	12	12	1/2	0.5	1.21 BAS	4
5	ICE 1.15	0.8	1/2	12	12	20	5	6	20	12	12	1/2	0.5	1.21 VRF	6
7	DISHWASHER 1.15	1.5	1/2	12	12	20	7	8	15	12	12	1/2	0.4	COND. PUMP	8
9	REC 1.15	0.2	1/2	12	12	20	9	10	15	12	12	1/2	0.7	OA-1, BBH	10
11	REC 1.15	0.2	1/2	12	12	20	11	12	2P	12	--	--	0.7		12
13	REC 1.15	0.2	1/2	12	12	20	13	14	15	12	12	1/2	0.6	FC-1,	14
15	REC 1.15	1.1	1/2	12	12	20	15	16	2P	12	--	--	0.6		16
17	VENDING 1.18	0.8	1/2	12	12	20	17	18	15	12	12	1/2	0.9	FC-1.2, 1.5	18
19	VENDING 1.18	0.8	1/2	12	12	20	19	20	2P	12	--	--	0.9		20
21	VENDING 1.18	0.8	1/2	12	12	20	21	22	15	12	12	1/2	1.0	FC-1.3, 1.4	22
23	EWC 1.24	0.5	1/2	12	12	20	23	24	2P	12	--	--	1.0		24
25	REC 1.14, 1.15	0.7	1/2	12	12	20	25	26	30	10	10	1/2	2.3	1.17 WH-2	26
27	REC 100B, 1.16, 1.17	0.9	1/2	12	12	20	27	28	2P	10	--	--	2.3		28
29	REC 1.22, EXTERIOR	0.9	1/2	12	12	20	29	30	15	12	12	1/2	0.5	1.17 P-1, AUTO VALVE TX	30
31	SPARE	0.0	--	--	--	20	31	32	15	12	12	1/2	0.7	1.17 1/4 HP EF-2	32
33	SPARE	0.0	--	--	--	20	33	34	15	12	12	1/2	0.7	1.16 1/4 HP EF-3	34
35	SPARE	0.0	--	--	--	20	35	36	15	12	12	1/2	1.0	1.22 UH	36
37	SPACE ONLY	0.0	--	--	--	--	37	38	--	--	--	--	0.0	SPACE ONLY	38
39	SPACE ONLY	0.0	--	--	--	--	39	40	--	--	--	--	0.0	SPACE ONLY	40
41	SPACE ONLY	0.0	--	--	--	--	41	42	--	--	--	--	0.0	SPACE ONLY	42

DESCRIPTION	CONNECTED KVA	DEMAND FACTOR	DEMAND KVA
CONT. LOAD	0.36	125%	0.45
RECEPTACLE	4.50	100%/50%	4.50
MTRS/COOLS	7.96	100%	7.96
HEATS	1.00	100%	1.00
WATER HEATER	4.50	100%	4.50
EQUIPMENT	7.90	100%	7.90
KITCHEN EQUIP.	0.00	65%	0.00
SPECIAL EQ.	0.00	100%	0.00
25% OF LARGEST HVAC/MOTOR			0.00
TOTAL DEMAND			26.31

200 A MINIMUM BUS SIZE
150 A MAIN CIRCUIT BREAKER
10 K MINIMUM AIC RATING

SURFACE MOUNTING
NEMA 1 ENCLOSURE
GROUND BAR

NOTES
1. SEE SPECIFICATION
2.
3.
4.
5.

CONNECTED LOADS	
PHASE A:	9.1 KVA
PHASE B:	9.5 KVA
PHASE C:	7.7 KVA
TOTAL:	26.2 KVA
DEMAND	73 AMP

KEY NOTES:

1. PROVIDE INTERNAL SURGE PROTECTION MODULE.
   - L-L, L-N, L-G PROTECTION WITH MIN. 120KA.
   - WITH SURGE COUNTER.
   - 60A/3P BREAKER IS NOT REQUIRED IF A DISCONNECT IS FURNISHED WITH THE MODULE.
2. LOAD IS CALCULATED AT MCA.
3. PROVIDE LOCK FOR ON POSITION. PROVIDE RED LABEL TO IDENTIFY LOAD ON THE PANEL AS REQUIRED.
4. PROVIDE GFCI BREAKER. DO NTO SHARE NEUTRAL.

LOAD SUMMARY AND PANEL SCHEDULES

NO SCALE

A15

ATLANTEC ENGINEERS, PA 23052
now IMEG
3221 BLUE RIDGE ROAD, SUITE 113
RALEIGH, NC 27612
PH: (919) 571-1111

SEAL — NORTH CAROLINA PROFESSIONAL CORPORATION — IMEG CONSULTANTS CORP. No. F-1307

SEAL — NORTH CAROLINA PROFESSIONAL SEAL 027479 ENGINEER — 10/15/2024

GENERAL NOTES

KEY PLAN

SCO ID #23-26923-01A

NO	REVISION	DATE

JKF ARCHITECTURE
625 LYNNDALE CT., SUITE F, GREENVILLE, NC 27858 252-355-1068

CRAVEN COMMUNITY COLLEGE
CORPORATE TRAINING CENTER
NEW BERN, NC

DRAWING TITLE
POWER RISER DIAGRAM
PANEL SCHEDULES

SCALE	1/8" = 1'-0"
DRAWN	SP
CHECKED	SP
DATE	9-1-2024
PROJECT NO.	2023-09
DRAWING NO	E4.1

© COPYRIGHT, JKF ARCHITECTURE PC, JOHN K. FARKAS, AIA

23052

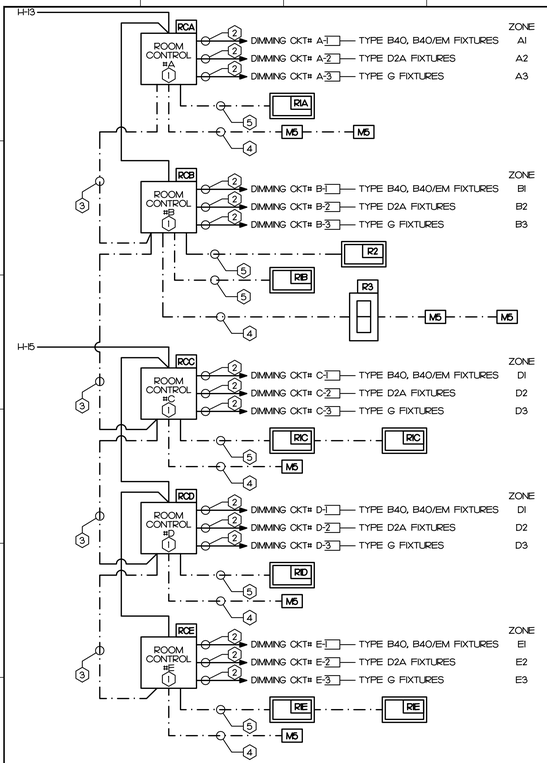

LEGEND

R1'X' — REMOTE LIGHTING CONTROL LED RECESSED TOUCH PANEL.
MIN. OF 3 DIMMING ZONE CONTROL.
MOUNT TOP OF BOX TO 48" A.F.F. UNLESS NOTED OTHERWISE.
SEE NOTE #6.
'X' INDICATED ASSOCIATED ROOM CONTROL UNIT.

R2 — REMOTE LIGHTING CONTROL LED RECESSED TOUCH PANEL FOR 'F' AREA (COMBINED A, B, C, D, E)
MIN. OF 3 DIMMING ZONE CONTROL.
MOUNT TOP OF BOX TO 48" A.F.F. UNLESS NOTED OTHERWISE.
SEE NOTE #6.

R3 — ON/OFF LOW VOLTAGE SWITCH FOR COMBINING AREA 'A, B, C, D, E' TO BE ONE AREA SHOWN AS 'F'.
MOUNT TOP OF BOX TO 48" A.F.F. UNLESS NOTED OTHERWISE.
SEE NOTE #6
LABEL 'PARTITION SWITCH'

RC'X' — ROOM CONTROL UNIT;
MIN. OF (3) 0-10V DIMMING ZONES.
EACH ZONE SHALL HAVE RATING NOT LESS THAN 5A AT 277V
ZONE CONTROL UNITS COULD BE IN A COMBINED UNIT OR AS A SEPARATED UNITS.
'X' INDICATED ASSOCIATED ROOM AREA.

M5 — LOW VOLTAGE CEILING MOUNTED MOTION SENSOR
DUAL TECHNOLOGY. 20 FT. RADIUS AT 14 FT. A.F.F.

——— LINE VOLTAGE WIRES

———·——— LOW VOLTAGE CAT 5 PLENUM RATE PRE-TERMINATED CABLE.
CABLE SHALL BE PRE-TERMINATED BY FACTORY.
NO EXPOSED WIRING INSTALLATION IS ALLOWED EXCEPT IN ACCESSIBLE CEILING SPACE.

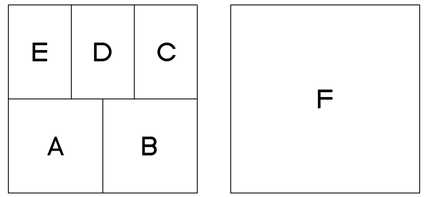

AREA UPON PARTITION — AREA UPON NO PARTITION

KEY NOTES:

1. ROOM CONTROL UNIT.
SEE NOTE #3 AND ON PLAN FOR LOCATION.
2. 0-10V DIMMING CIRCUIT.
PROVIDE SWITCHED WIRES AND 0-10V TO FIXTURES.
SEE NOTE #7.
3. ROOM CONTROL NETWORK CABLES.
4. CEILING MOUNTED MOTION SENSOR AND WALL SWITCH CABLE.
5. LED TOUCH PANEL CABLE.

NOTES:

1. THE INFORMATION SHOWN IN THIS DETAIL IS FOR A GUIDELINE.
2. ACCEPTABLE PRODUCTS;
A. ACUITY BRAND GROUP
B. NX CONTROLS
C. LUTRON
D. WATTSTOPPER
E. TOUCHE
F. SENSORWORX
G. COOPER LIGHTING GROUP.
H. LEVITON GROUP
3. SYSTEM REQUIREMENTS;
A. DIAGRAM SHOWS 'DISTRIBUTED TYPE' SYSTEM. COMPONENTS SHALL BE LOCATED ON WALL IN ROOM OR ABOVE CEILING IN STORAGE 119. LIGHTING CONTROL PANEL TYPE IS ACCEPTABLE AND SHALL BE LOCATED IN STORAGE 119. THE SPACE IN STORAGE 119 IS SUBJECTED TO ARCHITECT APPROVAL.
B. UPON PARTITION, EACH ROOM CONTROL SHALL CONTROL ONLY IN THE ASSIGNED AREA.
C. UPON NO PARTITION;
- UPON ACTIVATING SWITCH '23' THE ENTIRE MEETING ROOM 118 SHALL BE CONSIDERED AS AREA 'F'.
- TOUCH PANEL 'R2' SHALL BE USED TO CONTROL ALL LIGHT FIXTURES. IF TOUCH PANEL 'R1B' COULD BE PROGRAMMED TO FUNCTION TO CONTROL AREA 'F' AS INDICATED, TOUCH PANEL 'R2' IS NOT REQUIRED.
- CONTROL ZONES SHALL BE COMBINED AS FOLLOWS;
ZONE F1; A1, B1, C1, D1, E1,
ZONE F2; A2, B2, C2, D2, E2,
ZONE F3; A3, B3, C3, D3, E3.
- TOUCH PANEL 'R1A', 'R1B', 'R1C', 'R1D', 'R1E' SHALL BE DISABLE OR PROGRAMMED PER ARCHITECT INSTRUCTION FOR AREA 'F'.
D. E.C. SHALL PROGRAM TOUCH SCREEN MENUS AND SYSTEM PER ARCHITECT AND OWNER INSTRUCTION.
E. PROGRAMMING SHALL BE VIA HARDWIRE OR WIRELESS CONNECTION THROUGH A COMPUTER OR SMART PHONE APP. FOR HARDWIRE CONNECTION, CONNECTION LOCATION SHALL NOT BE LOCATED HIGHER THAN 48" A.F.F. PROGRAMMING APP SHALL BE INCLUDED.
4. E.C. SHALL SUBMIT ACTUAL WIRING DIAGRAM WITH THE SHOP DRAWING SUBMITTAL FOR APPROVAL.
5. E.C. SHALL PROVIDE A MIN. 1 HOUR FOR TRAINING.
6. FOR WALL MOUNTED DEVICES, SEE DETAIL H10/A8.1 FOR TYPICAL MOUNTING HEIGHT. CONFIRM MOUNTING HEIGHT WITH ARCHITECT PRIOR TO START WORK.
7. FOR ALL WIRING FROM 0-10V DIMMING MODULE TO LIGHT FIXTURE NOTES;
A. SWITCHED WIRES ARE CONSIDERED LIGHT CIRCUIT.
B. 0-10V CONTROL WIRES ARE CONSIDERED CLASS 2 CIRCUIT.
- WIRING MAY RUN EXPOSED IN ACCESSIBLE CEILING SPACE.
- WIRING SHALL BE IN CONDUIT WHERE INSTALLED IN FURRED SPACE OR NOT-ACCESSIBLE AREA.
- CABLE SHALL BE PLENUM RATE.
C. BOTH CIRCUITS SHALL NOT BE IN THE SAME RACEWAY. SEE NEC 725.136.

LIGHTING CONTROL DIAGRAM MEETING ROOM 118

NO SCALE — G10

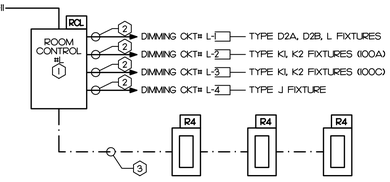

KEY NOTES:

1. ROOM CONTROL UNIT.
SEE NOTE #3 AND ON PLAN FOR LOCATION.
2. 0-10V DIMMING CIRCUIT.
PROVIDE SWITCHED WIRES AND 0-10V TO FIXTURES.
3. CEILING MOUNTED MOTION SENSOR AND WALL SWITCH CABLE.

LEGEND

R4 — REMOTE LIGHTING CONTROL CONTROL SWITCH TO TURN ON LOBBY AND CORRIDOR LIGHT AFTER BUSINESS HOUR.
SWITCH SHALL BE NOT FUNCTIONING DURING BUSINESS HOUR.
MOUNT TOP OF BOX TO 48" A.F.F. UNLESS NOTED OTHERWISE.
SEE NOTE #6.

RCL — ROOM CONTROL UNIT;
MIN. OF (4) 0-10V DIMMING ZONES.
EACH ZONE SHALL HAVE RATING NOT LESS THAN 5A AT 277V
ZONE CONTROL UNITS COULD BE IN A COMBINED UNIT OR AS A SEPARATED UNITS.
WITH TIME CLOCK FOR SCHEDULE CONTROL.
TIME CLOCK SHALL BE WITH DAY-LIGHT SAVING AND BATTERY BACKUP.

——— LINE VOLTAGE WIRES

———·——— LOW VOLTAGE CAT 5 PLENUM RATE PRE-TERMINATED CABLE.
CABLE SHALL BE PRE-TERMINATED BY FACTORY.
NO EXPOSED WIRING INSTALLATION IS ALLOWED EXCEPT IN ACCESSIBLE CEILING SPACE.

NOTES:

1. THE INFORMATION SHOWN IN THIS DETAIL IS FOR A GUIDELINE.
2. ACCEPTABLE PRODUCTS;
A. ACUITY BRAND GROUP
B. HUBBELL LIGHTING GROUP
C. LUTRON
D. WATTSTOPPER
E. TOUCHE
F. SENSORWORX
G. COOPER LIGHTING GROUP.
H. LEVITON GROUP
3. SYSTEM REQUIREMENTS;
A. DIAGRAM SHOWS 'DISTRIBUTED TYPE' SYSTEM. COMPONENTS SHALL BE LOCATED ON WALL IN ROOM OR ABOVE CEILING IN STORAGE 123.
B. PROGRAMMING SHALL BE VIA HARDWIRE OR WIRELESS CONNECTION THROUGH A COMPUTER OR SMART PHONE APP. FOR HARDWIRE CONNECTION, CONNECTION LOCATION SHALL NOT BE LOCATED HIGHER THAN 48" A.F.F. PROGRAMMING APP SHALL BE INCLUDED.
C. PROGRAMMING REQUIREMENTS;
- E.C. SHALL PROGRAM SYSTEM PER ARCHITECT AND OWNER INSTRUCTION.
- E.C. SHALL PROGRAM ALL ZONES TO BE ON DURING BUSINESS HOUR AND OFF AFTER BUSINESS HOUR.
4. E.C. SHALL SUBMIT ACTUAL WIRING DIAGRAM WITH THE SHOP DRAWING SUBMITTAL FOR APPROVAL.
5. E.C. SHALL PROVIDE A MIN. 1 HOUR FOR TRAINING.
6. FOR WALL MOUNTED DEVICES, SEE DETAIL H10/A8.1 FOR TYPICAL MOUNTING HEIGHT. CONFIRM MOUNTING HEIGHT WITH ARCHITECT PRIOR TO START WORK.
7. FOR ALL WIRING FROM 0-10V DIMMING MODULE TO LIGHT FIXTURE NOTES;
A. SWITCHED WIRES ARE CONSIDERED LIGHT CIRCUIT.
B. 0-10V CONTROL WIRES ARE CONSIDERED CLASS 2 CIRCUIT.
- WIRING MAY RUN EXPOSED IN ACCESSIBLE CEILING SPACE.
- WIRING SHALL BE IN CONDUIT WHERE INSTALLED IN FURRED SPACE OR NOT-ACCESSIBLE AREA.
- CABLE SHALL BE PLENUM RATE.
C. BOTH CIRCUITS SHALL NOT BE IN THE SAME RACEWAY. SEE NEC 725.136.

LIGHTING CONTROL DIAGRAM LOBBY 1, LOBBY 2, CORR. 1, CORR. 2

NO SCALE — G15

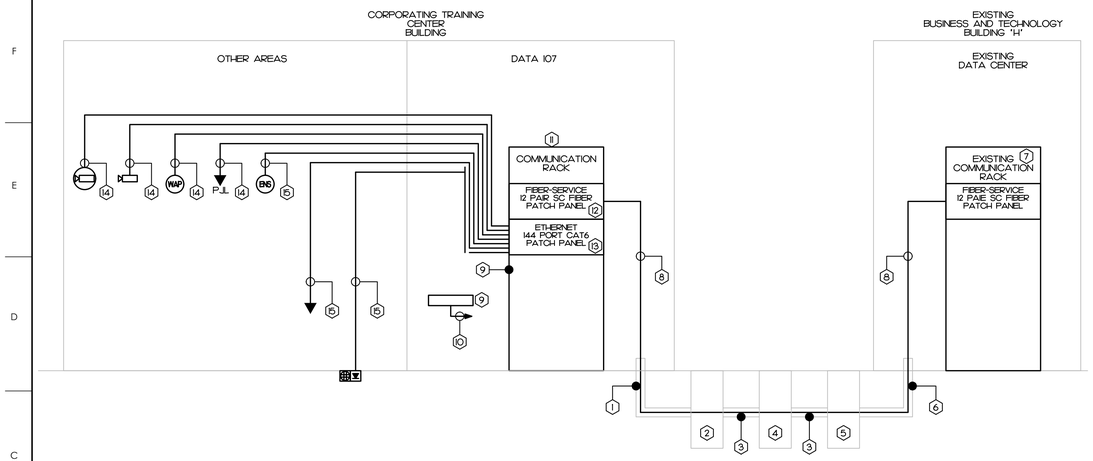

KEY NOTES:

1. NEW; COMMUNICATION SERVICE CONDUIT.
- 1 - 4" CONDUIT ENCASED IN CONCRETE.
- PROVIDE MAXCELL EDGE 4" 4-CELL INNERDUCT OR EQUAL.
- SEE DETAIL A15/E7.1 FOR ROUTING.
- SEE SPECIFICATION.

2. EXISTING COMMUNICATION MAN HOLE.
SEE KEY NOTE #2 IN DETAIL A15/E7.1.

3. EXISTING UNDERGROUND CONDUIT SHOWN AS DASHED LINE IN DETAIL A15/E7.1. FIELD VERIFY ROUTING AT SITE.
PROVIDE WITH MAXCELL INNERDUCT PRIOR TO PULLING THE NEW CABLE. INNER DUCT SHALL BE WITH 3-CELL MIN. FIELD VERIFY SIZE WITH EXISTING CONDUIT.

4. EXISTING COMMUNICATION MAN HOLE(S). NOT SHOWN IN DETAIL A15/E7.1. FIELD VERIFY LOCATIONS AT SITE.

5. EXISTING COMMUNICATION MAN HOLE.
SEE KEY NOTE #3 IN DETAIL A15/E7.1.

6. EXISTING UNDERGROUND CONDUIT SHOWN IN DETAIL A15/E7.1. PROVIDE WITH MAXCELL INNERDUCT PRIOR TO PULLING THE NEW CABLE. INNER DUCT SHALL BE WITH 3-CELL MIN. FIELD VERIFY SIZE WITH EXISTING CONDUIT.

7. AT EXISTING COMMUNICATION RACK.
- PROVIDE 12 PAIR FIBER OPTIC SC PATCH PANEL. SEE NOTE #3.
- FIELD VERIFY RACK AND LOCATION WITH OWNER PRIOR TO INSTALL THE PATCH PANEL.
- FIELD COORDINATE WITH OWNER PRIOR TO START WORK.

8. FIBER OPTIC SERVICE CABLE;
12 PAIR INDOOR/OUTDOOR CABLE.
- E.C. SHALL ESTIMATE FIBER OPTIC LENGTH FOR 1000 FT.
- SEE SPECIFICATION.

9. TELECOMMUNICATION MAIN GROUNDING BUSBAR (TMGB)
- 0.25" THICK SOLID COPPER.
- 4" HIGH AND 20" LONG.
- SHALL HAVE 30 ATTACHMENT POINTS (TWO ROWS OF 15 EACH) FOR TWO-HOLE GROUNDING LUGS.
- WITH WALL-MOUNT STANDOFF BRACKETS, ASSEMBLY SCREW AND INSULATORS CREATING 4" STANDOFF FROM WALL.
- UL LISTED FOR GROUNDING AND BONDING EQUIPMENT.

10. #6G CU IN 1/2"C TO MAIN GROUNDING AT SERVICE PANEL 'H'.

11. PROVIDE 19" OPEN RACK.
SEE DETAIL A15/E1.1 FOR LOCATION.

12. PROVIDE 12 PAIR FIBER OPTIC SC PATCH PANEL. SEE NOTE #3.

13. PROVIDE 144 PORT CAT6 PATCH PANEL.

14. 1 CAT6 CABLE

15. 2 CAT6 CABLES.

NOTES:

1. FOR ALL COMMUNICATION DROPS;
- PROVIDE 1"C (MIN.) WHERE THERE IS NO ACCESSIBLE CEILING SPACE.
- EXPOSED WIRING WITH J-HOOK IS ALLOWED IN ACCESSIBLE CEILING SPACE.
- SEE SPECIFICATION.
2. SEE SPECIFICATION.
3. FIBER OPTIC CONNECTOR AND PATCH PANEL NOTE;
THIS DETAIL AND SPEC SHOW THE CONNECTOR AND PATCH PANEL TO BE "SC" TYPE. E.C. SHALL FIELD VERIFY WITH OWNER IT DEPARTMENT PRIOR TO ORDERING. IF OWNER REQUIREMENT IS NOT "SC" TYPE, E.C. SHALL FURNISH PER OWNER INSTRUCTION WITHOUT ADDITIONAL COST.

COMMUNICATION DISTRIBUTION RISER DIAGRAM

NO SCALE — A8

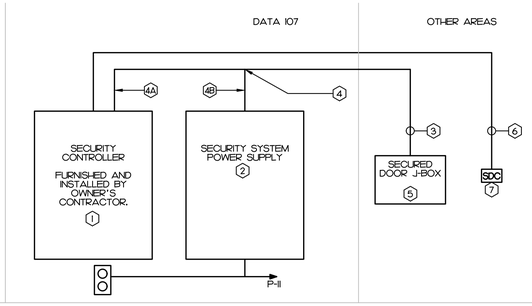

KEY NOTES:

1. SECURITY CONTROLLER
FURNISHED AND INSTALLED BY OWNER'S CONTRACTOR. EQUIPMENT IS WITH CORD AND PLUG.
2. 24DC POWER SUPPLY UNIT FOR ELECTRIC LOCK.
- POWER SUPPLY SHALL HAVE CAPACITY NOT LESS THAN 6A BASED ON ELECTRIC LOCK POWER CONSUMPTION OF 500 mA PER DOOR AND CAN PROVIDE POWER UP TO 10 DOORS WITH 20% SAFETY FACTOR.
- POWER SUPPLY SHALL HAVE BATTERY BACKUP UP TO 1 HOURS.
- INPUT/OUTPUT SURGE PROTECTION.
- 120VAC INPUT POWER
3. SECURED DOOR CABLE.
- 'BANANA PEEL' PLENUM RATED CABLE WITH;
a. #18-3PR CONDUCTORS WITH SHIELD
b. #18-2C CONDUCTORS
c. #18-4C CONDUCTORS
d. #16-4C CONDUCTORS.
4. 'PEEL' SECURED DOOR CABLE (KEY NOTE #3) AND ROUTE;
4A #18-3PR CONDUCTORS WITH SHIELD, #18-2C CONDUCTORS AND #18-4C CONDUCTORS TO SECURITY CONTROLLER. LEAVE 10 FT. CABLE AT SECURITY CONTROLLER. TERMINATION AT SECURITY CONTROLLER BY OWNER'S CONTRACTOR.
4B #16-4C CONDUCTORS TO POWER SUPPLY. TERMINATION AT POWER SUPPLY BY E.C. PER OWNER'S CONTRACTOR INSTRUCTION.
5. SECURED DOOR J-BOX ABOVE SECURED DOOR.
SEE DETAIL A8/E5.2, G8/E5.2 AND G15/E5.2.
6. DOOR CONTACT CABLE.
- #18-4C PLENUM RATED CABLE
- PROVIDE 3/4"C (MIN) WHERE THERE IS NO ACCESSIBLE CEILING SPACE.
- EXPOSED WIRING WITH J-HOOK IS ALLOWED IN ACCESSIBLE CEILING SPACE.
- LEAVE 10 FT. CABLE AT SECURITY CONTROLLER. TERMINATION AT SECURITY CONTROLLER BY OWNER'S CONTRACTOR.
7. SECURITY DOOR CONTACT (TYPICAL)
LEAVE 10 FT. SLAG WIRE.

NOTES:

1. THIS DIAGRAM IS A GUIDELINE. E.C. SHALL PROVIDE COMPLETE ACCESSORIES AS REQUIRED.

SECURITY SYSTEM RISER DIAGRAM

NO SCALE — A15

ATLANTEC ENGINEERS, PA 23052
now IMEG
3221 BLUE RIDGE ROAD, SUITE 113
RALEIGH, NC 27612
PH: (919) 571-1111

SEAL — NORTH CAROLINA PROFESSIONAL CORPORATION — IMEG CONSULTANTS CORP. No. F-1507

SEAL — NORTH CAROLINA PROFESSIONAL — SEAL 027479 — ENGINEER — JOHN K. FARKAS — 10/15/2024

GENERAL NOTES

KEY PLAN

SCO ID #23-26923-01A

NO	REVISION	DATE

JKF ARCHITECTURE
625 LYNNDALE CT., SUITE F, GREENVILLE, NC 27858 252-355-1068

CRAVEN COMMUNITY COLLEGE
CORPORATE TRAINING CENTER
NEW BERN, NC

DRAWING TITLE
LIGHTING CONTROL DIGARAMS, COMMUNICATION RISER SECURITY RISER

SCALE	DRAWING NO
AS NOTED	E5.1
DRAWN: SP	
CHECKED: SP	
DATE: 9-1-2024	
PROJECT NO.: 2023-09	

© COPYRIGHT, JKF ARCHITECTURE PC, JOHN K. FARKAS, AIA

23252

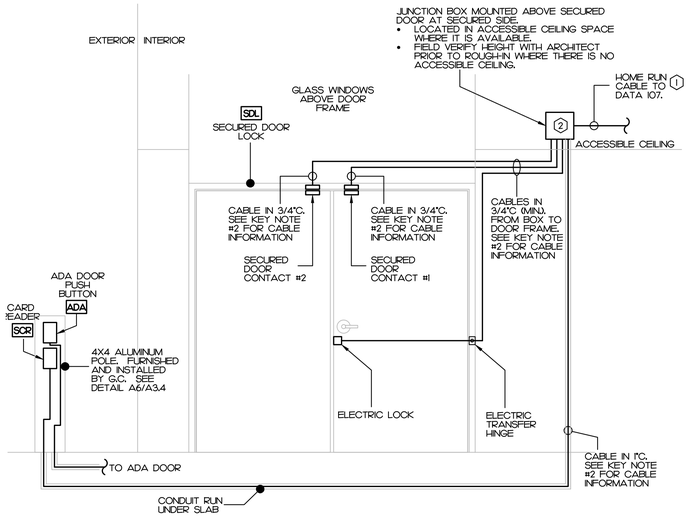

KEY NOTES:

(1) HOME RUN CABLE:
- 'BANANA PEEL' PLENUM RATED CABLE WITH:
  - a. #18-3PR CONDUCTORS WITH SHIELD
  - b. #18-2C CONDUCTORS
  - c. #18-4C CONDUCTORS
  - d. #16-4C CONDUCTORS.
- PROVIDE 1"C (MIN.) WHERE THERE IS NO ACCESSIBLE CEILING SPACE.
- EXPOSED WIRING WITH J-HOOK IS ALLOWED IN ACCESSIBLE CEILING SPACE.

(2) PEEL 'BANANA PEEL' CABLE (PER KEY NOTE #1) IN J-BOX AND ROUTE TO EACH DEVICE AS FOLLOWS:
- #18-3PR CONDUCTORS WITH SHIELD: TO CARD READER.
- #18-2C CONDUCTORS: TO DOOR CONTACT #1.
- #18-4C CONDUCTORS: TO DOOR CONTACT #2.
- #16-4C CONDUCTORS: TO ELECTRIC LOCK.

NOTES:

1. THIS DETAIL IS A GUIDELINE. FIELD VERIFY INSTALLATION WITH ARCHITECT PRIOR TO ROUGH-IN.
2. DOOR CONTACT, ELECTRIC LOCK ARE FURNISHED AND INSTALLED BY G.C.
3. CARD READER IS FURNISHED AND INSTALLED BY OWNER'S CONTRACTOR.
4. E.C SHALL TERMINATE CONDUCTORS PER OWNER'S CONTRACTOR INSTRUCTION.

SECURED DOUBLE DOOR DETAIL (TYPICAL) — G8
NOT TO SCALE

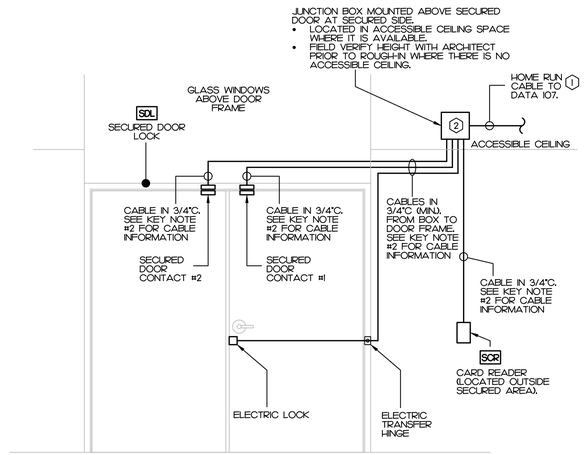

KEY NOTES:

(1) HOME RUN CABLE:
- 'BANANA PEEL' PLENUM RATED CABLE WITH:
  - a. #18-3PR CONDUCTORS WITH SHIELD
  - b. #18-2C CONDUCTORS
  - c. #18-4C CONDUCTORS
  - d. #16-4C CONDUCTORS.
- PROVIDE 1"C (MIN.) WHERE THERE IS NO ACCESSIBLE CEILING SPACE.
- EXPOSED WIRING WITH J-HOOK IS ALLOWED IN ACCESSIBLE CEILING SPACE.

(2) PEEL 'BANANA PEEL' CABLE (PER KEY NOTE #1) IN J-BOX AND ROUTE TO EACH DEVICE AS FOLLOWS:
- #18-3PR CONDUCTORS WITH SHIELD: TO CARD READER.
- #18-2C CONDUCTORS: TO DOOR CONTACT #1.
- #18-4C CONDUCTORS: TO DOOR CONTACT #2.
- #16-4C CONDUCTORS: TO ELECTRIC LOCK.

NOTES:

1. THIS DETAIL IS A GUIDELINE. FIELD VERIFY INSTALLATION WITH ARCHITECT PRIOR TO ROUGH-IN.
2. DOOR CONTACT, ELECTRIC LOCK ARE FURNISHED AND INSTALLED BY G.C.
3. CARD READER IS FURNISHED AND INSTALLED BY OWNER'S CONTRACTOR.
4. E.C SHALL TERMINATE CONDUCTORS PER OWNER'S CONTRACTOR INSTRUCTION.

SECURED DOUBLE DOOR DETAIL (TYPICAL) — G15
NOT TO SCALE

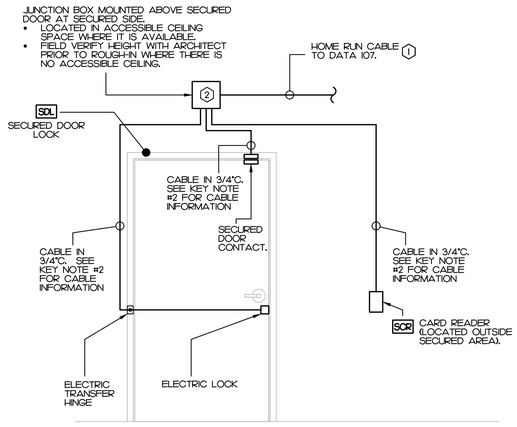

KEY NOTES:

(1) HOME RUN CABLE:
- 'BANANA PEEL' PLENUM RATED CABLE WITH:
  - a. #18-3PR CONDUCTORS WITH SHIELD
  - b. #18-2C CONDUCTORS
  - c. #18-4C CONDUCTORS
  - d. #16-4C CONDUCTORS.
- PROVIDE 1"C (MIN.) WHERE THERE IS NO ACCESSIBLE CEILING SPACE.
- EXPOSED WIRING WITH J-HOOK IS ALLOWED IN ACCESSIBLE CEILING SPACE.

(2) PEEL 'BANANA PEEL' CABLE (PER KEY NOTE #1) IN J-BOX AND ROUTE TO EACH DEVICE AS FOLLOWS:
- #18-3PR CONDUCTORS WITH SHIELD: TO CARD READER.
- #18-2C CONDUCTORS: TO DOOR CONTACT.
- #18-4C CONDUCTORS: SPARE.
- #16-4C CONDUCTORS: TO ELECTRIC LOCK.

NOTES:

1. THIS DETAIL IS A GUIDELINE. FIELD VERIFY INSTALLATION WITH ARCHITECT PRIOR TO ROUGH-IN.
2. DOOR CONTACT, ELECTRIC LOCK ARE FURNISHED AND INSTALLED BY G.C.
3. CARD READER IS FURNISHED AND INSTALLED BY OWNER'S CONTRACTOR.
4. E.C SHALL TERMINATE CONDUCTORS PER OWNER'S CONTRACTOR INSTRUCTION.

SECURED SINGLE DOOR DETAIL (TYPICAL) — A8
NOT TO SCALE

23052

ATLANTEC ENGINEERS, PA 23052
now IMEG
3221 BLUE RIDGE ROAD, SUITE 113
RALEIGH, NC 27612
PH: (919) 571-111

SEAL — NORTH CAROLINA PROFESSIONAL CORPORATION — IMEG CONSULTANTS CORP. No. F-1507

SEAL — NORTH CAROLINA PROFESSIONAL — SEAL 027479 — ENGINEER — SCOTT A. PRESNELL — 10/15/2024

GENERAL NOTES

KEY PLAN

SCO ID #23-26923-01A

NO	REVISION	DATE

JKF ARCHITECTURE
625 LYNNDALE CT., SUITE F, GREENVILLE, NC 27858 252-355-1068

CRAVEN COMMUNITY COLLEGE
CORPORATE TRAINING CENTER
NEW BERN, NC

DRAWING TITLE: SECURED DOOR DETAILS

SCALE	DRAWING NO
AS NOTED	E5.2
DRAWN: SP	
CHECKED: SP	
DATE: 9-1-2024	
PROJECT NO.: 2023-09	

© COPYRIGHT, JKF ARCHITECTURE PC, JOHN K. FARKAS, AIA

TABLE 'A' WORKING CLEARANCES				
VOLTAGE TO GROUND, NORMAL	CONDITION:	1	2	3
		MINIMUM CLEAR DISTANCE (FEET)		
0-150		3	3	3
151-600		3	3 1/2	4

WHERE THE "CONDITIONS" ARE AS FOLLOWS:

1. EXPOSED LIVE PARTS ON ONE SIDE AND NO LIVE OR GROUNDED PARTS ON THE OTHER SIDE OF THE WORKING SPACE, OR EXPOSED LIVE PARTS ON BOTH SIDES EFFECTIVELY GUARDED BY SUITABLE WOOD OR OTHER INSULATING MATERIALS. INSULATED WIRE OR INSULATED BUSBARS OPERATING AT NOT OVER 300 VOLTS SHALL NOT BE CONSIDERED LIVE PARTS.
2. EXPOSED LIVE PARTS ON ONE SIDE AND GROUNDED PARTS ON THE OTHER SIDE.
3. EXPOSED LIVE PARTS ON BOTH SIDES OF THE WORK SPACE (NOT GUARDED AS PROVIDED IN CONDITION 1) WITH THE OPERATOR BETWEEN.

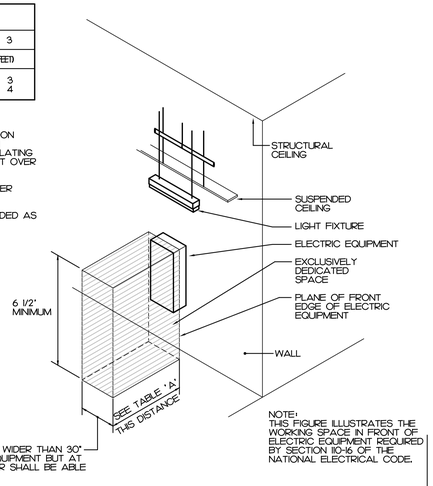

NOTE:
THIS FIGURE ILLUSTRATES THE WORKING SPACE IN FRONT OF ELECTRIC EQUIPMENT REQUIRED BY SECTION 110-16 OF THE NATIONAL ELECTRICAL CODE.

ALL ELECTRIC EQUIPMENT

NOTE:
THIS INCLUDES BUT IS NOT LIMITED TO PANELBOARDS, SAFETY SWITCHES, MOTOR STARTERS, JUNCTION BOXES AND OTHER ELECTRIC EQUIPMENT.

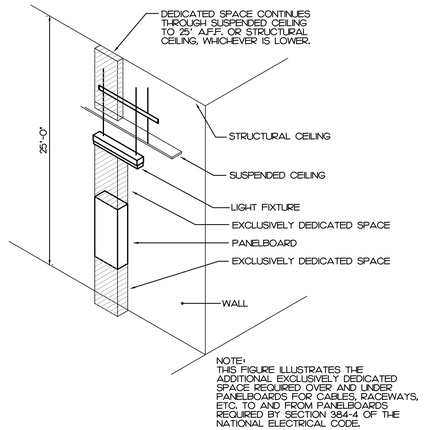

NOTE:
THIS FIGURE ILLUSTRATES THE ADDITIONAL EXCLUSIVELY DEDICATED SPACE REQUIRED OVER AND UNDER PANELBOARDS FOR CABLES, RACEWAYS, ETC. TO AND FROM PANELBOARDS REQUIRED BY SECTION 384-4 OF THE NATIONAL ELECTRICAL CODE.

PANELBOARDS AND SWITCHBOARDS

NOTE:
NO PIPING, DUCTS OR EQUIPMENT FOREIGN TO THE ELECTRICAL EQUIPMENT OR ARCHITECTURAL APPURTENANCES SHALL BE PERMITTED TO BE INSTALLED IN, ENTER OR PASS THROUGH THE DEDICATED SPACES SHOWN ABOVE.

ELECTRICAL PANEL BOARD REQUIRED CLEARENCE — E10

NOT TO SCALE

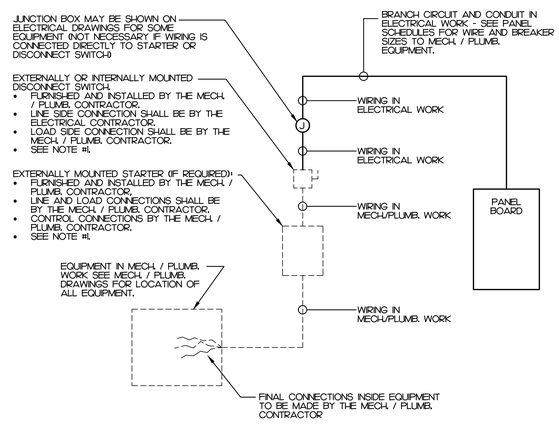

NOTES:

1. A COMBINATION STARTER MAY BE USED IN LIEU OF A SEPARATE DISCONNECT SWITCH AND STARTER.
   - COMBINATION STARTER SHALL BE FURNISHED AND INSTALLED BY MECH./PLUMB. CONTRACTOR.
   - LINE SIDE CONNECTION SHALL BE BY THE ELECTRICAL CONTRACTOR.
   - LOAD SIDE CONNECTION SHALL BE BY THE MECH. / PLUMB. CONTRACTOR.
   - CONTROL CONNECTIONS BY THE MECH. / PLUMB. CONTRACTOR.
2. E.C. SHALL FURNISH ALL REQUIRED FUSES.

WIRING TO MECH. / PLUMB. EQUIPMENT — H15

NO SCALE

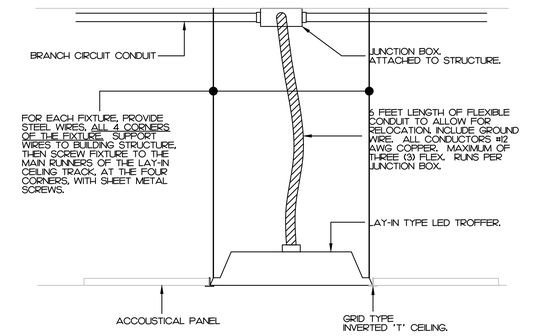

LIGHT FIXTURE MOUNTING DETAIL — D5

NOT TO SCALE

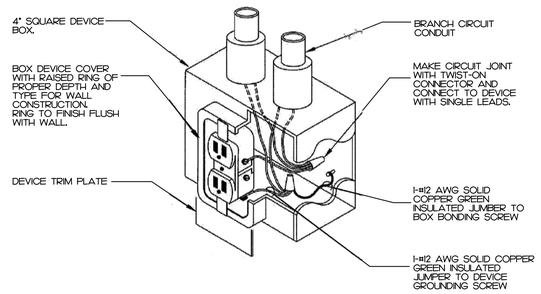

RECEPTACLE GROUNDING DETAIL — D10

NOT TO SCALE

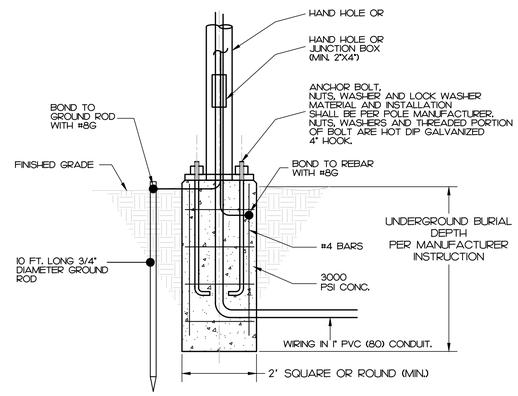

NOTES:

1. POLE DETAIL NOTES:
   - DETAIL IS SHOWN FOR RELOCATED POLE LIGHT. THERE IS NO NEW POLE LIGHT. THIS DETAIL IS A GUIDE LINE. E.C. SHALL FIELD VERIFY WITH EXISTING POLE BASE AND PROVIDE NEW POLE BASE TO BE THE SAME AS EXISTING AT NEW LOCATION.
   - GROUND ROD AND GROUND WIRE SHALL BE FURNISHED AS NEW FOR EACH RELOCATED POLE.

POLE BASE DETAIL — A15

NOT TO SCALE

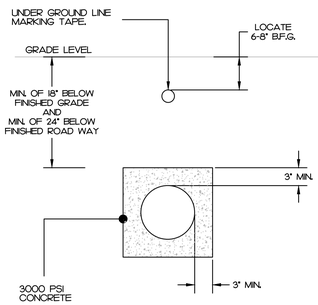

NOTES:

1. SEE SPECIFICATION 260545 AND GENERAL NOTE #26.

UNDERGROUND RACEWAY — A5

NOT TO SCALE

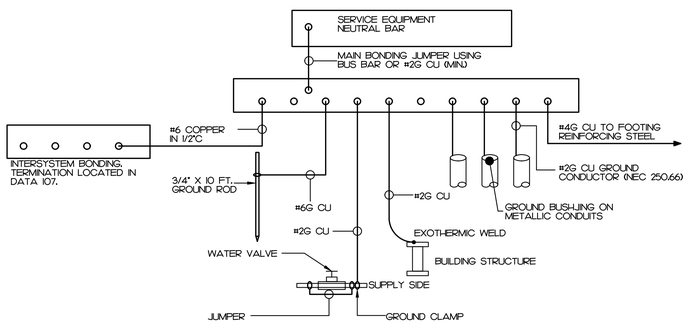

SERVICE EQUIPMENT GROUNDING DETAIL — A10

NOT TO SCALE

23052

ATLANTEC ENGINEERS, PA 23052
now IMEG
3221 BLUE RIDGE ROAD, SUITE 113
RALEIGH, NC 27612
PH: (919) 571-1111

SEAL: NORTH CAROLINA PROFESSIONAL CORPORATION — IMEG CONSULTANTS CORP. No. F-1507

SEAL: NORTH CAROLINA PROFESSIONAL — SEAL 027479 — ENGINEER — SCOTT A. PRAMOJANEY — 10/15/2024

GENERAL NOTES

KEY PLAN

SCO ID #23-26923-01A

NO	REVISION	DATE

JKF ARCHITECTURE
625 LYNNDALE CT., SUITE F, GREENVILLE, NC 27858 252-355-1068

CRAVEN COMMUNITY COLLEGE
CORPORATE TRAINING CENTER
NEW BERN, NC

DRAWING TITLE: DETAILS

SCALE	DRAWING NO
AS NOTED	E5.3
DRAWN: SP	
CHECKED: SP	
DATE: 9-1-2024	
PROJECT NO.: 2023-09	

© COPYRIGHT, JKF ARCHITECTURE PC., JOHN K. FARKAS, AIA

LIGHT FIXTURE SCHEDULE

TYPE	DESCRIPTION	CATALOG	ELECTRICAL DATA	NOTES
A30	2x2 LED DIRECT/INDIRECT FIXTURE RECESSED MOUNTED PERFORATED DIRECT LIGHT SHIELD 3000 LUMEN	LITHONIA: 2AVL2-30LSE-MDR-GZ10-LP840 COLUMBIA LIGHTING: EQUAL ORACLE LIGHTING: EQUAL	3000 LUMEN LED, 4000K 0-10V ELECTRONIC DIMMING DRIVER 34 WATTS - 37 VA, 120-277V	
A30/EM	2x2 LED DIRECT/INDIRECT FIXTURE RECESSED MOUNTED PERFORATED DIRECT LIGHT SHIELD 3000 LUMEN WITH EMERGENCY BATTERY BACKUP	LITHONIA: 2AVL2-30LSE-MDR-GZ10-LP840-EL14L COLUMBIA LIGHTING: EQUAL ORACLE LIGHTING: EQUAL	3000 LUMEN LED, 4000K 0-10V ELECTRONIC DIMMING DRIVER 34 WATTS - 37 VA, 120-277V	
A40	2x2 LED DIRECT/INDIRECT FIXTURE RECESSED MOUNTED PERFORATED DIRECT LIGHT SHIELD 4000 LUMEN	LITHONIA: 2AVL2-40LSE-MDR-GZ10-LP840 COLUMBIA LIGHTING: EQUAL ORACLE LIGHTING: EQUAL	4000 LUMEN LED, 4000K 0-10V ELECTRONIC DIMMING DRIVER 48 WATTS - 53 VA, 120-277V	
A40/EM	2x2 LED DIRECT/INDIRECT FIXTURE RECESSED MOUNTED PERFORATED DIRECT LIGHT SHIELD 4000 LUMEN WITH EMERGENCY BATTERY BACKUP	LITHONIA: 2AVL2-40LSE-MDR-GZ10-LP840-EL14L COLUMBIA LIGHTING: EQUAL ORACLE LIGHTING: EQUAL	4000 LUMEN LED, 4000K 0-10V ELECTRONIC DIMMING DRIVER 48 WATTS - 53 VA, 120-277V	
B40	2x2 LED DIRECT/INDIRECT FIXTURE RECESSED MOUNTED PERFORATED DIRECT LIGHT SHIELD 4000 LUMEN	LITHONIA: 2AVL2-40LSE-MDR-GZ1-LP840 COLUMBIA LIGHTING: EQUAL ORACLE LIGHTING: EQUAL	4000 LUMEN LED, 4000K 0-10V 1% ELECTRONIC DIMMING DRIVER 48 WATTS - 53 VA, 120-277V	
B40/EM	2x2 LED DIRECT/INDIRECT FIXTURE RECESSED MOUNTED PERFORATED DIRECT LIGHT SHIELD 4000 LUMEN WITH EMERGENCY BATTERY BACKUP	LITHONIA: 2AVL2-40LSE-MDR-GZ1-LP840-EL14L COLUMBIA LIGHTING: EQUAL ORACLE LIGHTING: EQUAL	4000 LUMEN LED, 4000K 0-10V 1% ELECTRONIC DIMMING DRIVER 48 WATTS - 53 VA, 120-277V	
C4	2X4 FLAT PANEL LED LAY-IN FIXTURE RECESSED MOUNTED 4000/5000/6000 LUMEN	LITHONIA: CPX-2X4-AL08-80CRI-SWW7-SWL -MVOLT COLUMBIA LIGHTING: EQUAL ORACLE LIGHTING: EQUAL	4000/5000/6000 LUMEN LED, 3500K/4000K/5000K ELECTRONIC DIMMING DRIVER 27/35/48 WATTS - 30/39/52 VA, 120-277V	SET COLOR TO 4000K SEE NOTE ON PLAN FOR LUMEN SETTING.
D1	6" LED CAN LIGHT RECESSED MOUNTED. FLANGED DOWNLIGHT TRIM MEDIUM WIDE DISTRIBUTION (52°) 1000/1500/2000 LUMEN	MAXILUME: HH6-LED-1000L/1500L/2000L-DIM10 -MVOLT-MWD-40K-90-HH6-6501-CL-** LITHONIA: EQUAL PRESCOLITE: EQUAL	1000/15002000 LUMEN LED, 4000K 0-10V 1% ELECTRONIC DIMMING DRIVER 12/18/25 WATTS - 14/21/28 VA, 120-277V	** FLANGE COLOR PER ARCHITECT INSTRUCTION. SEE NOTE #4. SEE NOTE ON PLAN FOR LUMEN SETTING.
D1/EM	6" LED CAN LIGHT RECESSED MOUNTED. FLANGED DOWNLIGHT TRIM MEDIUM WIDE DISTRIBUTION (52°) 1000/1500/2000 LUMEN EMERGENCY BATTERY BACKUP	MAXILUME: HH6-LED-1000L/1500L/2000L-DIM10 -MVOLT-MWD-40K-90-EMG-LED-10W -HH6-6501-CL-** LITHONIA: EQUAL PRESCOLITE: EQUAL	1000/15002000 LUMEN LED, 4000K 0-10V 1% ELECTRONIC DIMMING DRIVER 12/18/25 WATTS - 14/21/28 VA, 120-277V	** FLANGE COLOR PER ARCHITECT INSTRUCTION. SEE NOTE #4. SEE NOTE ON PLAN FOR LUMEN SETTING.
D2A	6" LED CAN WITH DROP GLASS RING RECESSED MOUNTED. FLANGED DOWNLIGHT TRIM MEDIUM WIDE DISTRIBUTION (52°) 2000 LUMEN	MAXILUME: HH6-LED-2000L-DIM10-MVOLT-MWD -40K-90-HH6-6509-CL-** KIRLIN: EQUAL PRESCOLITE: EQUAL	2000 LUMEN LED, 4000K 0-10V 1% ELECTRONIC DIMMING DRIVER 20 WATTS - 23 VA, 120-277V	** FLANGE COLOR PER ARCHITECT INSTRUCTION. SEE NOTE #4.
D2A/EM	6" LED CAN WITH DROP GLASS RING RECESSED MOUNTED. FLANGED DOWNLIGHT TRIM MEDIUM WIDE DISTRIBUTION (52°) 2000 LUMEN EMERGENCY BATTERY BACKUP	MAXILUME: HH6-LED-2000L-DIM10-MVOLT-MWD -40K-90-EMG-LED-10W-HH6-6509-CL-** KIRLIN: EQUAL PRESCOLITE: EQUAL	2000 LUMEN LED, 4000K 0-10V ELECTRONIC DIMMING DRIVER 20 WATTS - 23 VA, 120-277V	** FLANGE COLOR PER ARCHITECT INSTRUCTION. SEE NOTE #4.
D2B	6" LED CAN WITH DROP GLASS RING RECESSED MOUNTED. FLANGED DOWNLIGHT TRIM MEDIUM WIDE DISTRIBUTION (52°) 1500 LUMEN	MAXILUME: HH6-LED-1500L-DIM10-MVOLT-MWD -40K-90-HH6-6509-CL-** KIRLIN: EQUAL PRESCOLITE: EQUAL	1500 LUMEN LED, 4000K 0-10V 1% ELECTRONIC DIMMING DRIVER 15 WATTS - 16 VA, 120-277V	** FLANGE COLOR PER ARCHITECT INSTRUCTION. SEE NOTE #4.
F4	47" ARCHITECTURAL LED WALL MOUNTED FIXTURE. UP/DOWN ASYMMETRICAL DISTRIBUTION 2600 TOTAL DELIVERED LUMEN	VISA: CV1704-L40K(H)-MVOLT-** PRUDENTIAL: EQUAL CORONET: EQUAL	2600 TOTAL DELIVERED LUMEN LED, 4000K 0-10V ELECTRONIC DIMMING DRIVER 33 WATTS - 36 VA, 120-277V	** FINISH PER ARCHITECT INSTRUCTION MOUNT TOP OF FIXTURE 9' A.F.F. SEE ARCHITECTURAL ELEVATION SHEET A4.1.
F8	93" ARCHITECTURAL LED WALL MOUNTED FIXTURE. UP/DOWN ASYMMETRICAL DISTRIBUTION 5000 TOTAL DELIVERED LUMEN	VISA: CV1710-L40K(L)-MVOLT-** PRUDENTIAL: EQUAL CORONET: EQUAL	5000 TOTAL DELIVERED LUMEN LED, 4000K 0-10V ELECTRONIC DIMMING DRIVER 56 WATTS - 62 VA, 120-277V	** FINISH PER ARCHITECT INSTRUCTION MOUNT TOP OF FIXTURE 9' A.F.F. SEE ARCHITECTURAL ELEVATION SHEET A4.1.
G	DECORATIVE WALL SCONE WALNUT WOOD BODY BRUSHED ROSE GOLD FACE MATERIAL 1130 LUMEN	CERNO: 03-136-W-G-35-P1 OCL: EQUAL JUSTICE DESIGN: EQUAL	1130 LUMEN LED, 3500K 0-10V ELECTRONIC DIMMING DRIVER 13 WATTS - 15 VA, 120-277V	MOUNT TOP OF FIXTURE 8'-6" A.F.F. SEE ARCHITECTURAL ELEVATION SHEET A4.2.
H	3.5" APERTURE 14 FT. LINEAR PENDANT LED FIXTURE. PENDANT MOUNTED 12180 LUMEN DIRECT (875 LUMEN/FT.)	ALW: LP3.5SD-S14-MED/80/4000K-V01- -EXT/F-N-N-N-N-**-UNV STARTEK: EQUAL ORACLE LIGHTING: EQUAL	121800 LUMEN DIRECT LED, 4000K 0-10V 1% ELECTRONIC DIMMING DRIVER 117.6 WATTS - 131 VA, 120-277V	** FINISH PER ARCHITECT INSTRUCTION HANG BOTTOM 8 FT. A.F.F.

LIGHT FIXTURE SCHEDULE

TYPE	DESCRIPTION	CATALOG	ELECTRICAL DATA	NOTES
J	6 FT. DIAMETER LED RING PENDANT FIXTURE. DIRECT/INDIRECT PENDANT MOUNTED WALNUT RING WALL DISTRESSED BRASS SEAM PLATE 12685 LUMEN DOWN LIGHT 6515 LUMEN UP LIGHT	CERNO: R0030-6-S-001-117-B-40-XD** OCL: EQUAL CORONET: EQUAL	12685 LUMEN DOWN/ 6515 LUMEN UP LED, 4000K 0-10V ELECTRONIC DIMMING DRIVER 224 WATTS - 250 VA, 120-277V	** DROP CORD LENGTH PER ARCHITECT INSTRUCTION. HANG BOTTOM APPROX. 16 FT. A.F.F.
K1	40" VERTICAL LINEAR PENDANT LED FIXTURE. PENDANT MOUNTED 3 SIDES, WALNUT WOOD BODY, DISTRESSED BRASS FINISH 4475 LUMEN 6" DROP CORD LENGTH	CERNO: R0020-3-40-001-117-40-XD6 OCL: EQUAL CORONET: EQUAL	4475 LUMEN LED, 4000K 0-10V ELECTRONIC DIMMING DRIVER 38 WATTS - 41 VA, 120-277V	
K2	40" VERTICAL LINEAR PENDANT LED FIXTURE. PENDANT MOUNTED 3 SIDES, WALNUT WOOD BODY, DISTRESSED BRASS FINISH 4475 LUMEN 12" DROP CORD LENGTH	CERNO: R0020-3-40-001-117-40-XD12 OCL: EQUAL CORONET: EQUAL	4475 LUMEN LED, 4000K 0-10V ELECTRONIC DIMMING DRIVER 38 WATTS - 41 VA, 120-277V	
L	4 FT. LINEAR SURFACE LED FIXTURE. 2" APERTURE, SURFACE MOUNTED DIFFUSE REVEAL LENS 3840 LUMEN (960 LUMEN/FT.)	ALW: LP2SMB-S4-MED/80/4000K-V05-EXT/R -**-UNV ORACLE: EQUAL STARTEK: EQUAL	3840 LUMEN LED, 4000K 0-10V ELECTRONIC DIMMING DRIVER 33.6 WATTS - 38 VA, 120-277V	** FINISH PER ARCHITECT INSTRUCTION
L/EM	4 FT. LINEAR SURFACE LED FIXTURE. 2" APERTURE, SURFACE MOUNTED DIFFUSE REVEAL LENS 3840 LUMEN (960 LUMEN/FT.) EMERGENCY BATTERY BACKUP	ALW: LP2SMB-S4-MED/80/4000K-V05-EXT/R -**-UNV-EMB/I ORACLE: EQUAL STARTEK: EQUAL	3840 LUMEN LED, 4000K 0-10V ELECTRONIC DIMMING DRIVER 33.6 WATTS - 38 VA, 120-277V	** FINISH PER ARCHITECT INSTRUCTION
S4	4 FT. LED STRIP LIGHT PENDANT OR SURFACE MOUNTED 4000 LUMEN	LITHONIA: CSS-L48-4000LM-MVOLT-40K-80CRI COLUMBIA LIGHTING: EQUAL ORACLE LIGHTING: EQUAL	4000 LUMEN LED, 4000K 0-10V ELECTRONIC DIMMING DRIVER 35 WATTS - 40 VA, 120-277V	
S4M	4 FT. LED STRIP LIGHT PENDANT OR SURFACE MOUNTED 4000 LUMEN WITH MOTION SENSOR	LITHONIA: CSS-L48-4000LM-MVOLT-40K-80CRI -SFR7CSS COLUMBIA LIGHTING: EQUAL ORACLE LIGHTING: EQUAL	4000 LUMEN LED, 4000K 0-10V ELECTRONIC DIMMING DRIVER 35 WATTS - 40 VA, 120-277V	
U	EXTERIOR DECORATIVE WALL SCONE WALL MOUNTED BLACK FINISH 1130 LUMEN LISTED FOR WET LOCATION AND 0°F	CERNO: 03-242-B-40-P1 ALVA: EQUAL JUSTICE DESIGN: EQUAL	1130 LUMEN LED, 4000K ELECTRONIC DRIVER 14 WATTS - 16 VA, 120-277V	MOUNT TOP OF FIXTURE 8' A.F.F. SEE ARCHITECTURAL ELEVATION SHEET A2.1 (BUILDING ELEVATION).
V	6" LED CAN LIGHT RECESSED MOUNTED. FLANGED DOWNLIGHT TRIM MEDIUM DISTRIBUTION (36°) 1000/1500/2000 LUMEN LISTED FOR WET LOCATION AND 0°F PROVIDE SLOPE ADAPTER TO MATCH SLOPE CEILING.	MAXILUME: HH6-LED-1000L/1500L/2000L-DIM10 -MVOLT-MWD-40K-90-HH6-6501-CL-** -MSCA-6 LITHONIA: EQUAL PRESCOLITE: EQUAL	1000/15002000 LUMEN LED, 4000K 0-10V 1% ELECTRONIC DIMMING DRIVER 12/18/25 WATTS - 14/21/28 VA, 120-277V	** FLANGE COLOR PER ARCHITECT INSTRUCTION. SET LUMEN TO 2000 LUMEN
W	EXTERIOR WALL MOUNTED CUT-OFF LED FIXTURE. WALL MOUNTED 2600 LUMEN LISTED FOR WET LOCATION AND 0°F.	GARDCO: 101L-16L-530-NW-G1-3-UNV-DD-** BROWNLEE: EQUAL BEACON: EQUAL NLS: EQUAL LITHONIA: EQUAL	2600 LUMEN LED, 4000K ELECTRONIC DRIVER 28 WATTS - 30 VA, 120-277V	** FINISH COLOR PER ARCHITECT INSTRUCTION. MOUNT TOP OF FIXTURE AT BOTTOM OF SOULDIER COURSE FACE BRICK (APPROX. 13'-9" A.F.F.). SEE ARCHITECTURAL ELEVATION SHEET A2.1 (BUILDING ELEVATION).
W/EM	EXTERIOR WALL MOUNTED CUT-OFF LED FIXTURE. WALL MOUNTED 2600 LUMEN LISTED FOR WET LOCATION AND 0°F. WITH EMERGENCY BATTERY BACKUP	GARDCO: 101L-16L-530-NW-G1-3-EBPC-UNV-DD-** BROWNLEE: EQUAL BEACON: EQUAL NLS: EQUAL LITHONIA: EQUAL	2600 LUMEN LED, 4000K ELECTRONIC DRIVER 28 WATTS - 30 VA, 120-277V	** FINISH COLOR PER ARCHITECT INSTRUCTION. MOUNT TOP OF FIXTURE AT BOTTOM OF SOULDIER COURSE FACE BRICK (APPROX. 13'-9" A.F.F.). SEE ARCHITECTURAL ELEVATION SHEET A2.1 (BUILDING ELEVATION).
SL/B	42" HEIGHT 12"X12" BOLLARD LIGHT PRE-CAST CONCRETE TYPE V DISTRIBUTION LISTED FOR WET LOCATION AND 0°F	SOLERA: SQB-CONC-30W LED-3900-4000K -UNV-ABT-CPL-TY5-TS-CONC-** UTILITY STRUCTURE: EQUAL WAYME TYLER: EQUAL NLS: EQUAL	3900 LUMEN LED, 4000K ELECTRONIC DRIVER 30 WATTS - 35 VA, 120-277V	** LOUVER COLOR PER ARCHITECT INSTRUCTION. PROVIDE WITH 24" X 24" X 12" (MIN.) CONCRETE BASE OR PER MANUFACTURER INSTRUCTION.
EG	EMERGENCY LIGHT 220 LUMEN TOTAL	LITHONIA: ELM2L-M12 MAXILUME: EQUAL DUAL-LITE: EQUAL	(2) 1.2W LED HEADS 1 WATTS - 5 VA, 120-277V	
EX	EDGE-LIT EXIT LIGHT WITH BATTERY BACKUP 1 SIDE GREEN LETTER	LITHONIA: EDG-1-G-EL MAXILUME: EQUAL DUAL-LITE: EQUAL	LED FOR EXIT PANEL 2.5 WATTS - 3 VA, 120/277V	
EX2	EDGE-LIT EXIT LIGHT WITH BATTERY BACKUP 2 SIDE GREEN LETTER GREEN ON MIRROR	LITHONIA: EDG-2-GMR-EL MAXILUME: EQUAL DUAL-LITE: EQUAL	LED FOR EXIT PANEL 2.5 WATTS - 3 VA, 120/277V	

LIGHT LEVEL TABLE

ROOM		AVERAGE LIGHT LEVEL AT 30" A.F.F.
100A	LOBBY 1	28.5 FC
100B	CORRIDOR 1	27.1 FC
100C	LOBBY 2	28.5 FC
100D	CORRIDOR 2	27.1 FC
101	RECEPTION	35.5 FC
102	CONF. ROOM	77.8 FC
103	OFFICE	47.0 FC
104	OFFICE	51.8 FC
105	OFFICE	54.0 FC
106	OFFICE	54.4 FC
107	DATA	26.0 FC
108	MEN	16.4 FC
109	WOMEN	16.4 FC
110	WORK/COPY	29.4 FC
111	UNISEX	16.3 FC
112	MOTHER'S ROOM	16.4 FC
113	CATERING KITCHEN	68.5 FC
114	MEN	32.1 FC
115	WOMEN	31.2 FC
116	VENDING	30.9 FC
117	JANITOR CLOSET	17.6 FC
118	MEETING ROOM 118	65.5 FC
121	MECH./ELEC.	26.8 FC
122	FIRE	27.9 FC
123	STORAGE	28.3 FC

NOTES:

1. SEE ARCHITECTURAL PLAN FOR MOUNTING LOCATION AND HEIGHT. FIELD COORDINATE MOUNTING HEIGHT WITH ARCHITECT IF NOT SHOWN ON ARCHITECTURAL PLAN.
2. E.C. SHALL SUBMIT CATALOG TO ARCHITECT FOR APPROVAL PRIOR PURCHASE ANY. FINISH COLOR AND TRIM SUBJECT TO BE CHANGED PER ARCHITECT.
3. E.C. SHALL FIELD VERIFY LED COLOR WITH ARCHITECT PRIOR TO ORDERING. FOR BID PURPOSE, ALL LED COLOR SHALL BE 4000K.
4. TYPE D1, D1/EM, D2A, D2A/EM, D2B, V FIXTURES NOTE:
   - FIXTURE SHALL BE LISTED FOR ACCESSIBLE FROM ABOVE OR BELOW CEILING.
   - FIXTURE SHALL BE SUITABLE FOR NON-ACCESSIBLE CEILING INSTALLATION.
5. EQUAL PRODUCTS TO BE APPROVED BY ARCHITECT AND ENGINEER. THE FOLLOWING ARE ACCEPTED MANUFACTURER BRANDS:
   - ACUITY GROUP
   - HUBBELL LIGHTING GROUP
   - ELITE LIGHTING GROUP
   - SIGNIFY LIGHTING GROUP

LIGHT FIXTURE SCEHDULE
NO SCALE
A15

ATLANTEC ENGINEERS, PA 23052
now IMEG
3221 BLUE RIDGE ROAD, SUITE 113
RALEIGH, NC 27612
PH: (919) 571-1111

SEAL
NORTH CAROLINA PROFESSIONAL CORPORATION
IMEG CONSULTANTS CORP.
No. F-1507

SEAL
NORTH CAROLINA PROFESSIONAL ENGINEER
SEAL 027479
SUJIN PRAMOJANEY
10/15/2024

GENERAL NOTES

KEY PLAN

SCO ID #23-26923-01A

NO	REVISION	DATE

JKF ARCHITECTURE

625 LYNNDALE CT., SUITE F, GREENVILLE, NC 27858 252-355-1068

CRAVEN COMMUNITY COLLEGE
CORPORATE TRAINING CENTER
NEW BERN, NC

DRAWING TITLE
FIXTURE SCHEDULE

SCALE 1/8" = 1'-0"
DRAWN SP
CHECKED SP
DATE 9-1-2024
PROJECT NO. 2023-09
DRAWING NO E6.1

© COPYRIGHT, JKF ARCHITECTURE PC, JOHN K. FARKAS, AIA

23052

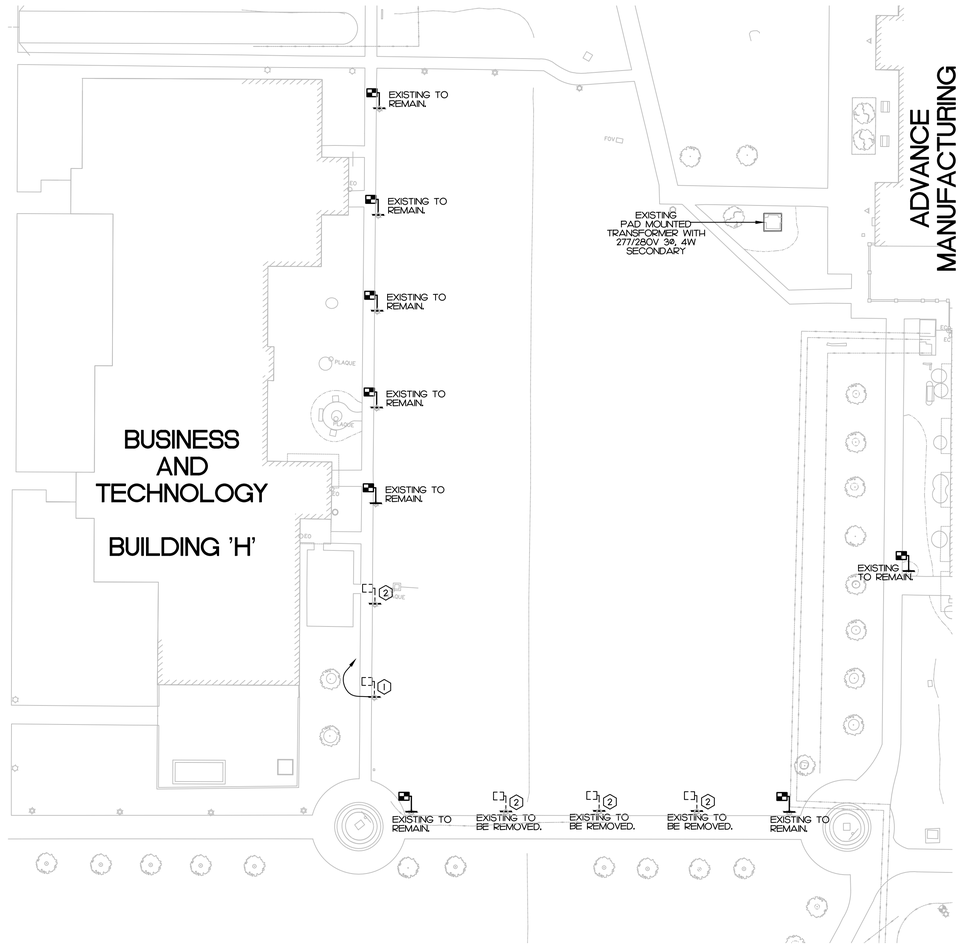

KEY NOTES

1. EXISTING LIGHT POLE TO BE RELOCATED ACROSS THE EXISTING WALK WAY. E.C. SHALL:
   - PROVIDE BYPASS WIRES IF EXISTING WIRES IS SERVING OTHER LIGHT POLE TO REMAIN. PROVIDE IN-GROUND BOX FOR CONNECTION AS REQUIRED).
   - EXTEND UNDERGROUND WIRES IN CONDUIT TO NEW LOCATION AS REQUIRED. FIELD VERIFY WORK WITH CIVIL ENGINEER PRIOR TO EXCAVATING.
2. EXISTING LIGHT POLE TO BE REMOVED. E.C. SHALL:
   - PROVIDE BYPASS WIRES IF EXISTING WIRES IS SERVING OTHER LIGHT POLE TO REMAIN. PROVIDE IN-GROUND BOX FOR CONNECTION AS REQUIRED.

NOTES:

1. FOR ALL LIGHT POLES TO BE REMOVED OR RELOCATED:
   - E.C. SHALL FIELD VERIFY CONDITION PRIOR TO REMOVING. E.C. SHALL REPORT POLE WITH NOT WORKING CONDITION TO THE ARCHITECT.
   - E.C. IS RESPONSIBLE TO STORE POLES. ANY DAMAGE SHALL BE E.C. RESPONSIBILITY.
2. FOR LIGHT POLES TO BE REMOVED PER KEY NOTE #2,
   - 2 OF THEM WILL BE REINSTALLED AT NEW LOCATIONS.
   - RETURN 2 UNUSED POLES TO OWNER AS REQUIRED.

N

EXISTING ELECTRICAL SITE PLAN
1" = 30'-0"
A8

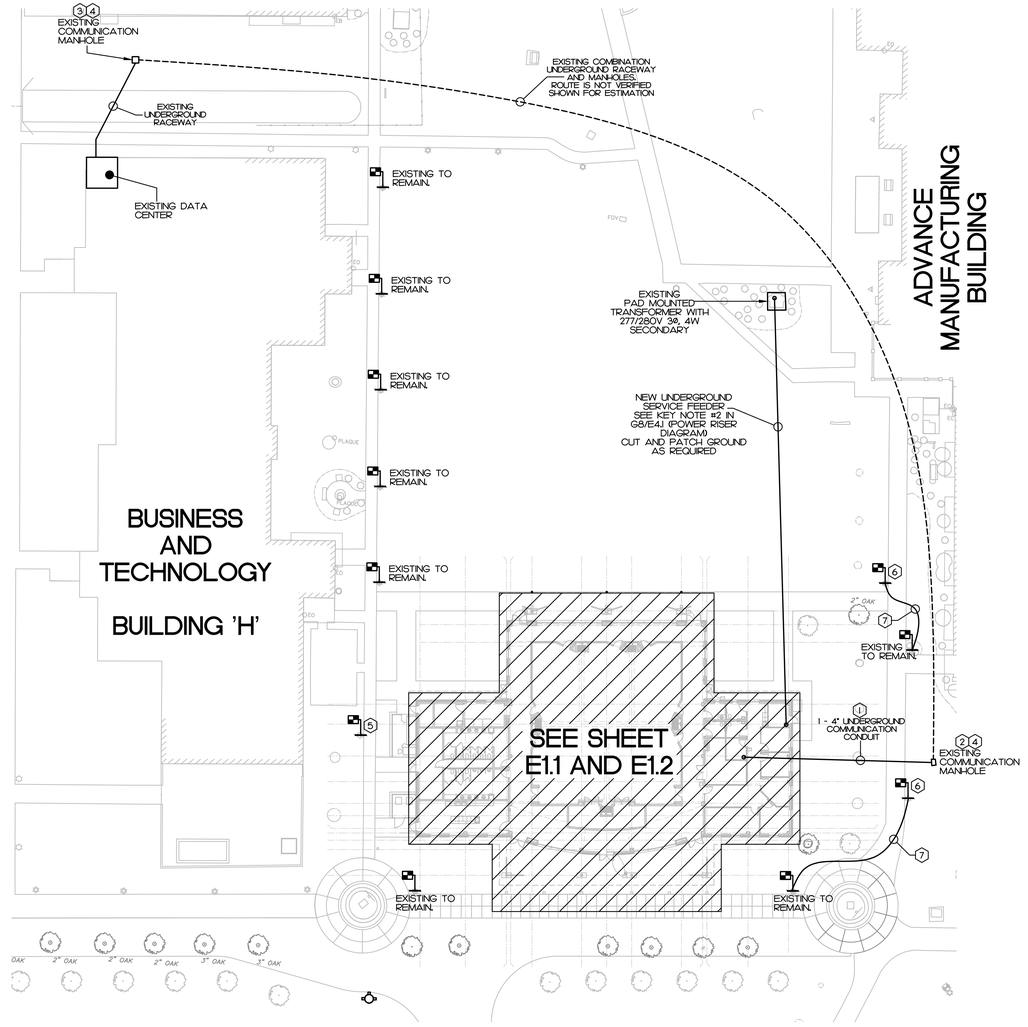

KEY NOTES

1. NEW UNDERGROUND CONDUIT. SEE KEY NOTE #1 IN A8/E5J. CUT AND PATCH GROUND AS REQUIRED.
2. EXISTING COMMUNICATION MANHOLE NEAR PROJECT BUILDING. FIELD VERIFY LOCATION AT SITE.
3. EXISTING COMMUNICATION MANHOLE NEAR DATA CENTER IN BUILDING 'H'. FIELD VERIFY LOCATION AT SITE.
4. THERE IS AN EXISTING UNDERGROUND RACEWAY BETWEEN MANHOLE PER KEY NOTE #2 AND #3. APPROX. LENGTH OF 600 FT. FIELD VERIFY EXISTING UNDERGROUND RACEWAY ROUTING AT SITE.
5. RELOCATED LIGHT POLE.
   - SEE KEY NOTE #1 IN A8/E7J FOR EXISTING LOCATION.
   - EXTEND WIRES TO THIS NEW LOCATION AS REQUIRED. CUT AND PATCH GROUND AS REQUIRED.
   - SEE DETAIL A15/E5.3 FOR POLE BASE DETAIL.
6. EXISTING POLE AT NEW LOCATION.
   - SEE DETAIL A15/E5.3 FOR POLE BASE DETAIL.
7. PROVIDE NEW UNDERGROUND WIRING IN CONDUIT TO EXISTING LIGHT POLE AS REQUIRED. CUT AND PATCH GROUND AS REQUIRED.

NOTES:

1. BUILDING 'H' AND CORPORATE TRAINING CENTER NEW FIBER OPTIC INSTALLATION NOTES:
   - E.C. SHALL CAREFULLY INSTALL NEW FIBER OPTIC IN EXISTING UNDERGROUND RACEWAY.
   - E.C. IS RESPONSIBLE FOR ANY DAMAGE TO EXISTING COMMUNICATION CABLES IN THE SAME RACEWAY.

N

ELECTRICAL SITE PLAN
1" = 30'-0"
A15

ATLANTEC ENGINEERS, PA 23052
now IMEG
3221 BLUE RIDGE ROAD, SUITE 113
RALEIGH, NC 27612
PH: (919) 571-1111

SEAL: NORTH CAROLINA PROFESSIONAL CORPORATION — IMEG CONSULTANTS CORP. No. F-1507

SEAL: NORTH CAROLINA PROFESSIONAL — SEAL 027479 — ENGINEER — SCOTT A. PARMENTER — 10/15/2024

GENERAL NOTES

KEY PLAN

SCO ID #23-26923-01A

NO	REVISION	DATE

JKF ARCHITECTURE
625 LYNNDALE CT., SUITE F, GREENVILLE, NC 27858 252-355-1068

CRAVEN COMMUNITY COLLEGE
CORPORATE TRAINING CENTER
NEW BERN, NC

DRAWING TITLE
EXISTING ELECTRICAL SITE PLAN
ELECTRICAL SITE PLAN

SCALE: 1/8" = 1'-0"	DRAWING NO: E7.1
DRAWN: SP	
CHECKED: SP	
DATE: 9-1-2024	
PROJECT NO.: 2023-09	

© COPYRIGHT, JKF ARCHITECTURE PC, JOHN K. FARKAS, AIA

23052

SYMBOL LEGEND

SYMBOL	DESCRIPTION	REMARKS
	SMOKE DETECTOR, PHOTOELECTRIC ADDRESSABLE.	SEE SPECIFICATION
F	FIRE ALARM PULL STATION. MOUNT 42" A.F.F. ADDRESSABLE.	SEE SPECIFICATION
AIM	MONITOR MODULE ADDRESSABLE.	SEE SPECIFICATION
AOM	RELAY CONTROL MODULE ADDRESSABLE.	SEE SPECIFICATION
ISO	ISOLATOR MODULE ADDRESSABLE.	SEE SPECIFICATION
'XX'	FIRE ALARM STROBE/HORN. MOUNT 80" A.F.F., 75 dBA SOUND LEVEL, 'XX' INDICATES CANDELA RATING. 'WP' DENOTES WEATHERPROOF TYPE	SEE SPECIFICATION
'XX'	FIRE ALARM CEILING STROBE/HORN. 75 dBA SOUND LEVEL, 'XX' INDICATES CANDELA RATING.	SEE SPECIFICATION
'XX'	FIRE ALARM STROBE. MOUNT 80" A.F.F. 'XX' INDICATES CANDELA RATING.	SEE SPECIFICATION
'XX'	FIRE ALARM CEILING STROBE. 'XX' INDICATES CANDELA RATING.	SEE SPECIFICATION
FACP	FIRE ALARM CONTROL PANEL, SURFACE MOUNTED. ADDRESSABLE.	SEE SPECIFICATION
FAA	FIRE ALARM REMOTE ANNUNCIATOR, FLUSH MOUNTED. ADDRESSABLE. MOUNT 42" A.F.F.	SEE SPECIFICATION
FCELL	FIRE ALARM CELLULAR COMMUNICATOR WITH BATTERY BACKUP 2 PATH COMMUNICATIONS: CELLULAR AND IP (INTERNET) SURFACE MOUNTED.	SEE SPECIFICATION
BDA	BI-DIRECTIONAL ANTENNA SYSTEM SURFACE MOUNTED.	SEE SPECIFICATION
WF	FIRE SPRINKLER WATER FLOW SWITCH.	BY SPRINKLER CONTRACTOR.
VS	FIRE SPRINKLER VALVE SUPERVISORY SWITCH (TAMPER SWITCH).	BY SPRINKLER CONTRACTOR.
LT	LOW TEMP SENSOR. TEMP SETTING 40°F. NORMALLY OPEN ROOM TEMPERATURE.	POTTER: RTS-O OR EQUAL
A.F.C.	ABOVE FINISHED CEILING	
A.F.F.	ABOVE FINISHED FLOOR - NOTE ALL MOUNTING DIMENSIONS GIVEN ARE TO THE BOTTOM OF THE OUTLET BOX	
B.F.G.	BELOW FINISHED GRADE	

NFPA 72 AND ADA DEVICE INSTALLATION REQUIREMENTS

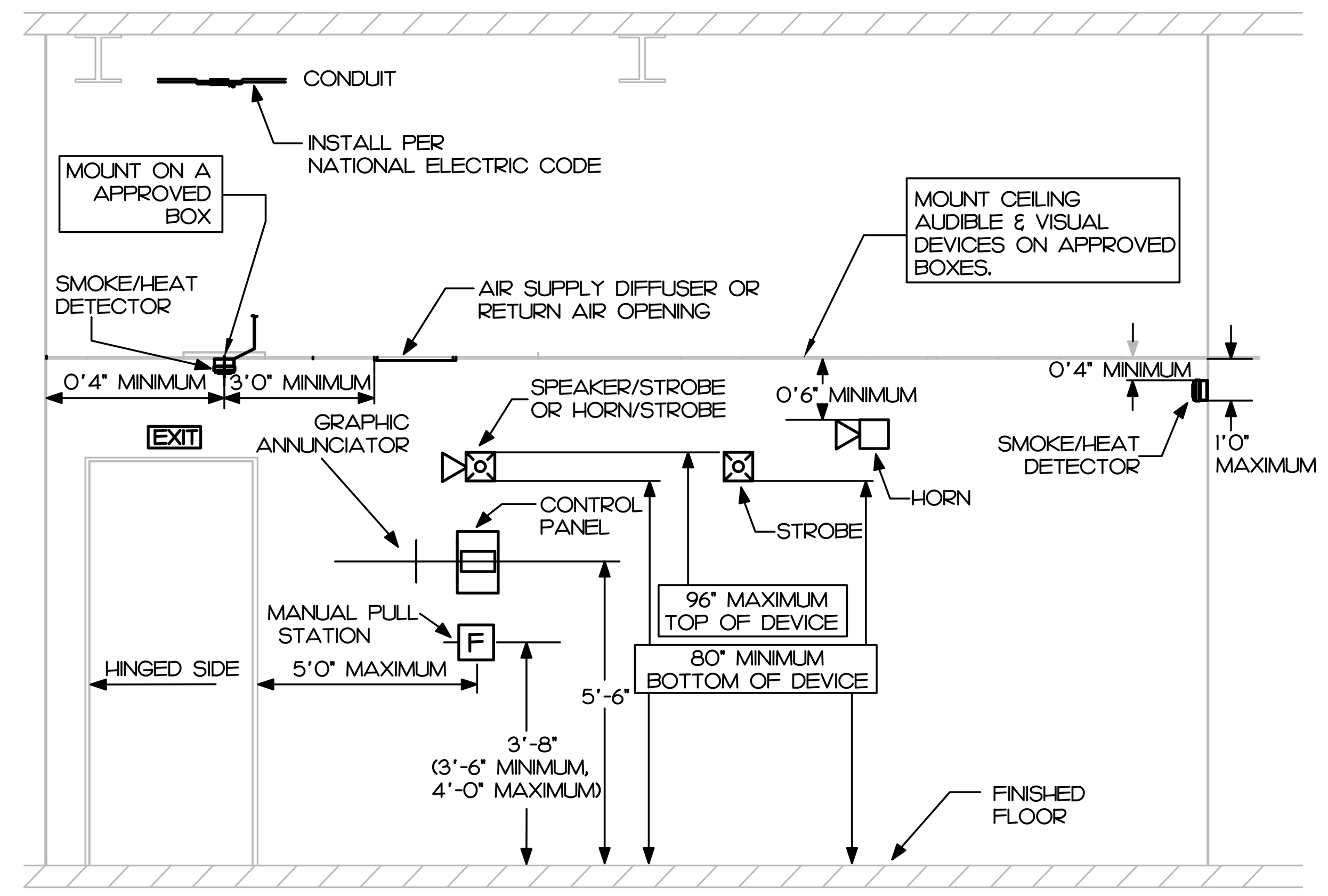

FIRE ALARM
DEVICE INSTALLATION DETAIL
NOT TO SCALE
H9

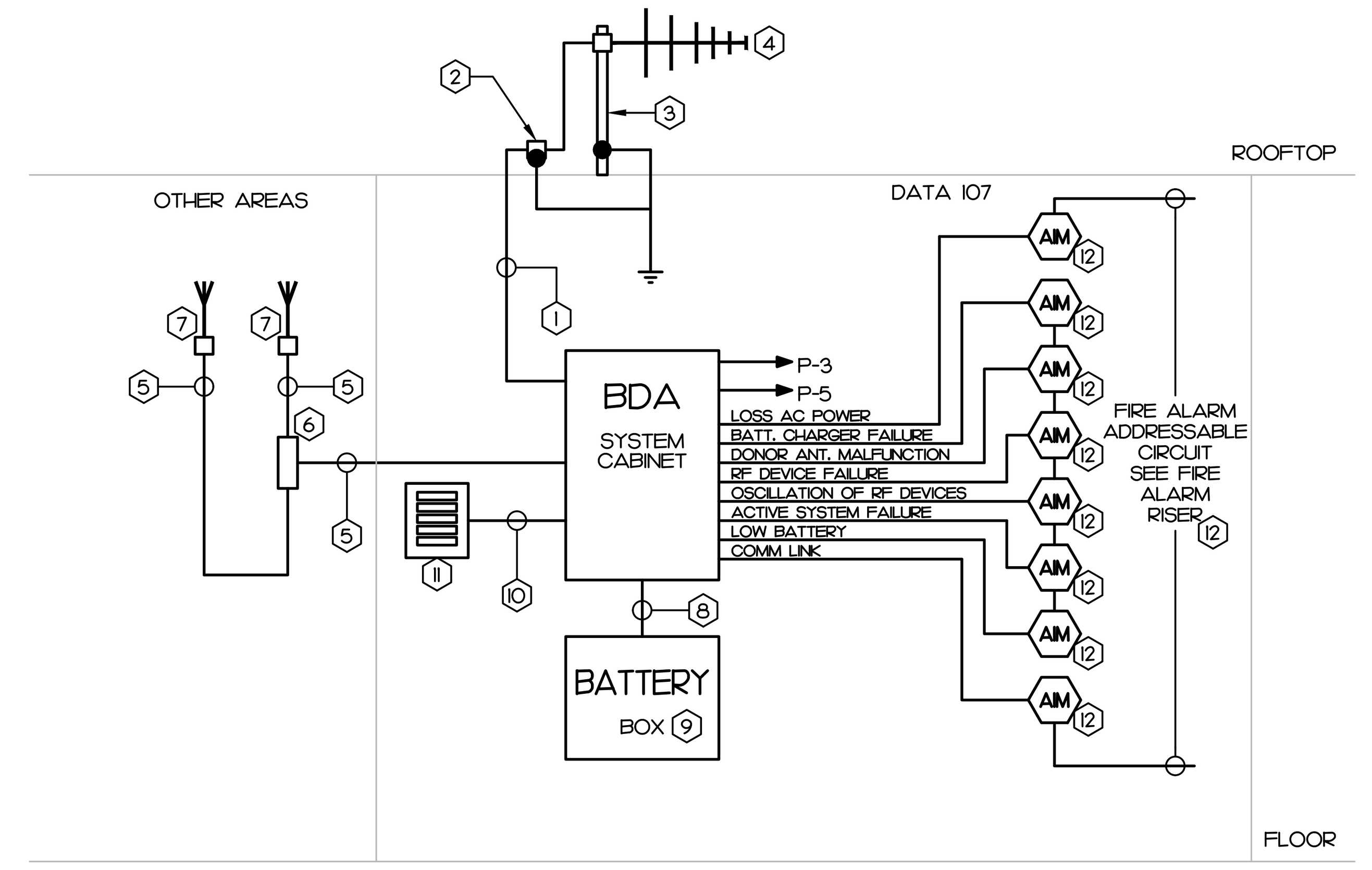

KEY NOTES

1. DONOR ANTENNAS CABLE IN CONDUIT.
2. PROVIDE LIGHTNING ARRESTOR, GROUNDED AS REQUIRED.
3. DONOR ANTENNA MAST. TO BE BONDED TO BUILDING STEEL.
4. DONOR ANTENNA.
5. DISTRIBUTED ANTENNA SYSTEM (DAS) CABLE IN CONDUIT.
6. PROVIDE SIGNAL SPLITTER AS REQUIRED.
7. PROVIDE DAS ANTENNA(S) AS REQUIRED FOR COVERAGE. FILED VERIFY LOCATION AND INSTALLATION OUTSIDE FIRE RISER ROOM WITH ARCHITECT PRIOR TO ROUGH-IN.
8. BATTERY CABLE IN CONDUIT.
9. BATTERY BOX: 24VDC
10. REMOTE ANNUNCIATOR CIRCUIT IN CONDUIT.
11. REMOTE ANNUNCIATOR. LOCATE ADJACENT TO FACP IN DATA 107.
12. FIRE ALARM DEVICE AND WIRING. SEE FIRE ALARM RISER DIAGRAM.

NOTES

1. CONTRACTOR SHALL PROVIDE BI-DIRECTIONAL ANTENNA SYSTEM (BDA) AS FOLLOWS:
   A. PROVIDE RF SURVEY AND MAP THE EMERGENCY RESPONDER RADIO SIGNAL STRENGTH (OUTSIDE) AT THE PROPERTY (RAW SURVEY)
   B. FURNISH SHOP DRAWINGS INCLUDING THE RADIO WAVE PROPAGATION PLAN TO THE ARCHITECT AND ENGINEER FOR APPROVAL PRIOR TO SUBMITTING TO THE CRAVEN COUNTY FIRE MARSHAL OFFICE TO OBTAIN THE INSTALLATION PERMIT.
   C. PROVIDE INSTALLATION PLAN INCLUDING CONDUIT ROUTING. CONDUIT ROUTING SHALL BE APPROVED BY ARCHITECT.
   D. PRIOR TO FINAL INSPECTION, AN ER-RSS INSIDE SURVEY SHALL BE PERFORMED AND MAPPED. THIS SHALL BE SUBMITTED TO THE ARCHITECT AND ENGINEER FOR APPROVAL PRIOR TO SUBMITTING TO THE CRAVEN COUNTY FIRE MARSHAL OFFICE FOR FINAL INSPECTION.
2. SHOWN DIAGRAM IS A GUIDE LINE. CONTRACTOR SHALL PROVIDE INSTALLATION PER SPECIFICATIONS AND MANUFACTURER INSTRUCTION.
3. INSTALLATION SHALL COMPLY WITH 2018 NC FIRE CODE, 2013 NFPA 72 AND 2016 NFPA 1221.

BI-DIRECTIONAL ANTENNA
SYSTEM DIAGRAM
NO SCALE
F15

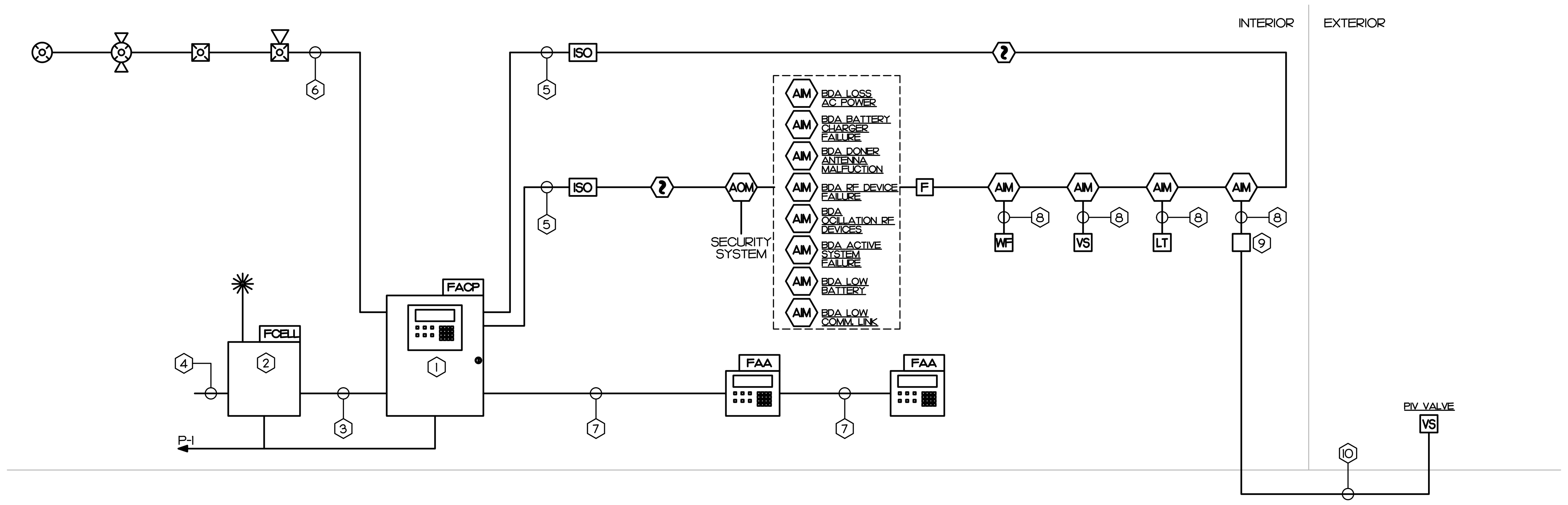

FIRE ALARM SYSTEM INPUT/OUTPUT MATRIX

SYSTEM OUTPUTS: FACP ANNUNCIATION | NOTIFICATION | REQUIRED FIRE SAFETY CONTROL

A: ACTUATE COMMON ALARM SIGNAL INDICATOR; B: ACTUATE AUDIBLE ALARM SIGNAL; C: ACTUATE COMMON SUPERVISORY SIGNAL INDICATOR; D: ACTUATE AUDIBLE SUPERVISORY SIGNAL; E: ACTUATE COMMON TROUBLE SIGNAL INDICATOR; F: ACTUATE AUDIBLE TROUBLE SIGNAL; G: ACTUATE ZONE OR DEVICE ADDRESS ALARM INDICATOR; H: ACTUATE GENERAL EVACUATION SIGNAL; I: DISPLAY CHANGE OF STATUS; J: TRANSMIT FIRE ALARM SIGNAL TO CENTRAL STATION; K: TRANSMIT SUPERVISORY SIGNAL TO CENTRAL STATION; L: TRANSMIT TROUBLE SIGNAL TO CENTRAL STATION; S: UNLOCK EXITS AND CONTROL DOORS

	SYSTEM INPUTS	A	B	C	D	E	F	G	H	I	J	K	L	M	N	O	P	Q	R	S	T	U	V	W	X	Y	
1	FIRE ALARM SYSTEM AC POWER FAILURE					●	●						●														1
2	FIRE ALARM SYSTEM LOW BATTERY					●	●						●														2
3	OPEN CIRCUIT					●	●						●														3
4	GROUND FAULT					●	●						●														4
5	NOTIFICATION APPLIANCE CIRCUIT SHORT					●	●						●														5
6	BUILDING MANUAL PULL STATIONS	●	●					●	●	●	●									●							6
7	CORRIDOR SMOKE DETECTORS	●	●					●	●	●	●									●							7
8	AREA SMOKE DETECTORS	●	●					●	●	●	●									●							8
9	SPRINKLER TAMPER SWITCH			●	●			●																			9
10	SPRINKLER WATER FLOW IN BUILDING	●	●					●	●	●	●									●							10
11	LOW TEMP. IN RISER ROOM			●	●			●				●															11
12	BDA SYSTEM: LOSS AC POWER			●	●			●				●															12
13	BDA SYSTEM: BATT. CHARGER FAILURE			●	●			●				●															13
14	BDA SYSTEM: DONOR ANTENNA MALFUNCTION.			●	●			●				●															14
15	BDA SYSTEM: RF DEVICE FAILURE			●	●			●				●															15
16	BDA SYSTEM: OSCILLATION OF RF DEVICES			●	●			●				●															16
17	BDA SYSTEM: ACTIVE SYSTEM FAILURE			●	●			●				●															17
18	BDA SYSTEM: LOW BATTERY			●	●			●				●															18
19	BDA SYSTEM: COMM. LINK			●	●			●				●															19
		A	B	C	D	E	F	G	H	I	J	K	L	M	N	O	P	Q	R	S	T	U	V	W	V	W	

KEY NOTES

1. ADDRESSABLE FACP. PROVIDE ADDITIONAL NAC PANEL AS REQUIRED.
2. CELLULAR/IP DIGITAL COMMUNICATOR. CONTRACTOR SHALL EVALUATE CELLULAR SIGNAL STRENGTH. PROVIDE EXTERIOR ANTENNA WITH ANTENNA WIRING IN CONDUIT IF NEEDED. EXTERIOR ANTENNA LOCATION SHALL BE APPROVED BY ARCHITECT.
3. COMMUNICATION WIRES FOR CELLULAR COMMUNICATOR CONNECTION PER MANUFACTURE INSTRUCTION.
4. INTERNET CONNECTION BY OWNER CONTRACTOR. E.C. SHALL PROVIDE PATCH CABLE TO CONNECT TO COMMUNICATION OUTLET.
5. CLASS A ADDRESSABLE CIRCUITS. PROVIDE ISOLATOR MODULES AS REQUIRED. SEE SPECIFICATION FOR DETAIL.
6. NOTIFICATION APPLIANCE CIRCUITS AS REQUIRED.
7. REMOTE ANNUNCIATOR CIRCUIT IN CONDUIT.
8. INITIATING CIRCUIT.
9. PROVIDE SURGE PROTECTOR AS REQUIRED.
10. WIRING IN 1" (MIN.) UNDERGROUND CONDUIT. MIN. BURIAL DEPTH OF 24" B.F.G.

FIRE ALARM NOTES

1. SEE PLANS FOR QUANTITY AND LOCATION OF ALL EQUIPMENT.
2. CONTRACTOR SHALL PROVIDE COMPLETE DOCUMENT PER 2018 FIRE CODE SECTION 907.1.1 AND 907.1.2 TO TO ENGINEER FOR APPROVAL PRIOR TO SUBMIT TO AND TESTING BY CRAVEN COUNTY FIRE MARSHAL'S OFFICE.
3. PLACARD THE ENTIRE FIRE ALARM SYSTEM. PROVIDE PANEL AND CIRCUIT NUMBERS ON A NAME PLATE AFFIXED TO THE FACE OF THE FIRE ALARM CONTROL PANEL.
4. CONTRACTOR SHALL PROVIDE ZONE MAPS COMPLETE WITH ADDRESSES FOR EACH FIRE ALARM DEVICE IN WOODEN FRAME ADJACENT TO THE NEW FIRE ALARM CONTROL PANEL.
5. ELECTRICAL CONTRACTOR SHALL PROVIDE BATTERY CALCULATIONS AND CUT SHEETS FOR FIRE ALARM SYSTEM TO ENGINEER FOR APPROVAL.
6. ALL WIRING SHALL BE SUPERVISED.
7. ALL WIRING SHALL BE PER MANUFACTURER'S SPECIFICATIONS.
8. ALL WIRING SHALL BE IN CONDUIT.
9. ADDRESSABLE SLC CIRCUIT REQUIREMENTS:
   - WIRING SHALL BE 'CLASS A'
   - SEE SPECIFICATION.
10. NOTIFICATION CIRCUIT REQUIREMENTS:
    - WIRING SHALL BE 'CLASS B'.
    - PROVIDE WITH 'SYNC MODULE' AS REQUIRED PER NFPA 72.
    - FURNISH NOTIFICATION CIRCUITS AS REQUIRED TO ACCOMMODATE CIRCUIT LOADING. NO NOTIFICATION CIRCUIT SHALL BE LOADED TO MORE THAN 80% CAPACITY.
11. NOTIFICATION APPLIANCE RATINGS:
    - PROVIDE SOUND (dB) AND CANDELA (Cd) RATINGS FOR ALL HORN/STROBE DEVICES PER NFPA 72. ALL VISIBLE NOTIFICATION APPLIANCES SHALL BE SYNCHRONIZED PER NFPA 72, 18.5.5.5.7 AND 18.5.3.6.
    - A DECIBEL LEVEL OF (15 dB ABOVE AMBIENT ON NFPA 72, TABLE A.18.4.3) SHALL BE MAINTAINED IN ALL GENERAL AREAS AND 100 dB (15 dB ABOVE AN AMBIENT OF 85 dB IN NFPA 72, 18.4.3.1) SHALL BE MAINTAINED IN ALL MECHANICAL EQUIPMENT ROOMS PER NFPA 72 AND THE 2018 NORTH CAROLINA STATE BUILDING CODE (SECTION 907.6.2).
12. DIGITAL ALARM COMMUINCATOR:
    - FIRE ALARM SYSTEM SHALL BE WITH DIGITAL ALARM COMMUNICATOR (DACT).
    - DACT SHALL HAVE CAPABILITY TO HANDLE 2 PHONE LINES.
    - WHERE DUAL COMMUNICATION PATHS OF CELLULAR NETWORK AND INTERNET NETWORK ARE REQUIRED BY THE LOCAL FIRE MARSHAL, PROVIDE WITH COMMUNICATOR IN LIEU OF 2 LINE TELEPHONE.
    - FIELD COORDINATE WITH OWNER TO TYPE MATCH MONITORING COMPANY.
13. FOR SPRINKLER SYSTEM:
    - FIELD COORDINATE QUANTITY AND LOCATION OF FLOW AND TAMPER SWITCHES WITH SPRINKLER'S FINAL DRAWINGS AND/OR CIVIL FINAL DRAWING FOR TAMPER SWITCH FOR PIV VALVE.
    - PROVIDE MONITORING MODULES AS REQUIRED FOR SPRINKLER SYSTEM.
14. ALL SECURITY DOOR LOCKS SHALL BE UNLOCKED UPON FIRE ALARM ACTIVATION.

FIRE ALARM RISER AND NOTES
NO SCALE
A15

ATLANTEC ENGINEERS, PA 23052
now IMEG
3221 BLUE RIDGE ROAD, SUITE 113
RALEIGH, NC 27612
PH: (919) 571-1111

SEAL

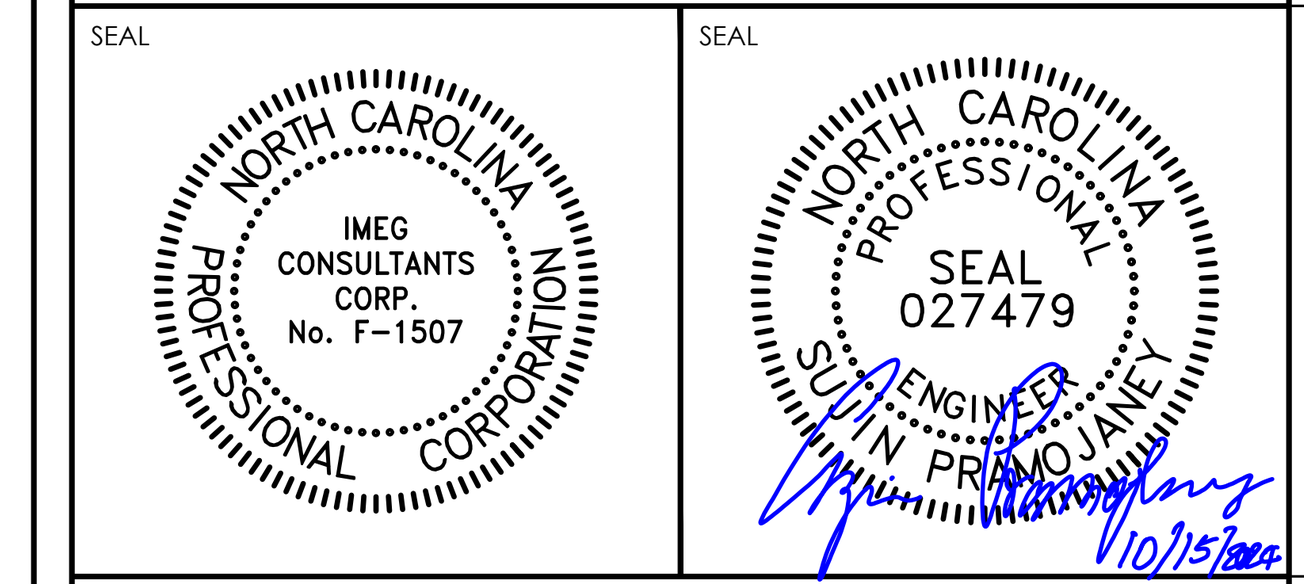

GENERAL NOTES

KEY PLAN

SCO ID #23-26923-01A

NO	REVISION	DATE

JKF ARCHITECTURE

625 LYNNDALE CT., SUITE F, GREENVILLE, NC 27858 252-355-1068

CRAVEN COMMUNITY COLLEGE
CORPORATE TRAINING CENTER
NEW BERN, NC

DRAWING TITLE
FIRE ALARM LEGEND, NOTES AND BDA SYSTEM DIAGRAM

SCALE: AS NOTED
DRAWN: SP
CHECKED: SP
DATE: 9-1-2024
PROJECT NO.: 2023-09
DRAWING NO: FA0.0

© COPYRIGHT, JKF ARCHITECTURE PC, JOHN K. FARKAS, AIA

23052

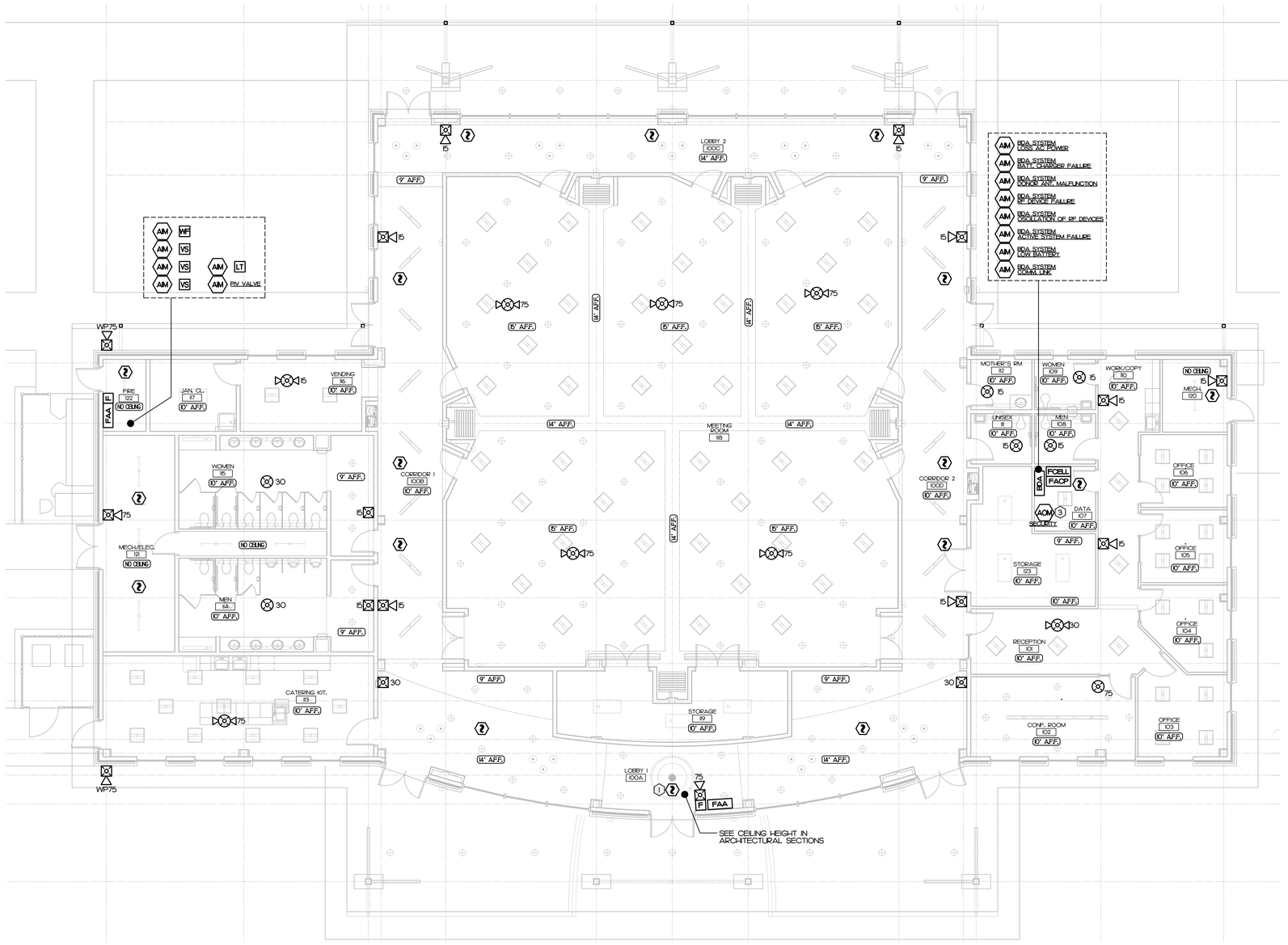

KEY NOTES:

1. FIELD VERIFY SMOKE DETECTOR LOCATION TO BE AT PEAK OF CEILING PER NFPA 72 WITH ARCHITECT PRIOR TO ROUGH-IN.
2. FIRE ALARM EQUIPMENT AT PIV VALVE. SEE SITE PLAN FOR LOCATION.
3. PROVIDE RELAY MODULE AT SECURITY CONTROLLER. PROVIDE FINAL CONNECTION TO SECURITY SYSTEM PER OWNER'S SECURITY CONTRACTOR INSTRUCTION.

NOTES

1. NOTES FOR ALL FIRE ALARM DEVICES AT CEILING:
   - FIELD VERIFY LOCATION WITH ARCHITECT PRIOR TO ROUGH-IN.
   - SEE SHEET A5.1 FOR LOCATIONS.
2. NOTES FOR ALL FIRE ALARM DEVICES ON WALL:
   - FIELD VERIFY LOCATION WITH ARCHITECT PRIOR TO ROUGH-IN.
   - SEE SHEET A5.1 FOR LOCATIONS.
   - SEE DETAIL H10/A8.1 FOR MOUNTING HEIGHT.

0 4' 8' 16'

SCALE: 1/8" = 1'-0"

FIRE ALARM PLAN

1/8" = 1'-0"

A15

ATLANTEC ENGINEERS, PA 23052

now IMEG

3221 BLUE RIDGE ROAD, SUITE 113
RALEIGH, NC 27612
PH: (919) 571-1111

SEAL

NORTH CAROLINA PROFESSIONAL CORPORATION
IMEG CONSULTANTS CORP.
No. F-1507

SEAL

NORTH CAROLINA PROFESSIONAL SEAL 027479 ENGINEER SALIN PRADHANANG

10/15/2024

GENERAL NOTES

KEY PLAN

SCO ID #23-26923-01A

NO	REVISION	DATE

JKF ARCHITECTURE

625 LYNNDALE CT., SUITE F, GREENVILLE, NC 27858 252-355-1068

CRAVEN COMMUNITY COLLEGE
CORPORATE TRAINING CENTER
NEW BERN, NC

DRAWING TITLE: FIRE ALARM PLAM

SCALE	1/8" = 1'-0"
DRAWN	SP
CHECKED	SP
DATE	9-1-2024
PROJECT NO.	2023-09
DRAWING NO	FA1.1

© COPYRIGHT, JKF ARCHITECTURE PC, JOHN K. FARKAS, AIA

23052